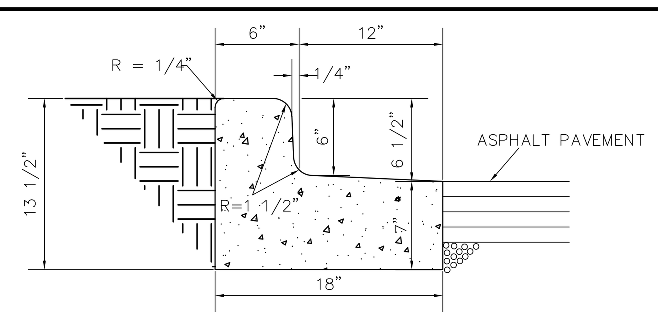

NOTE: INSTALL WERE THE DRAINAGE IS DIRECTED AWAY FROM THE CURB

HIGH SIDE CONCRETE CURB (H.S. C&G) DETAIL
NOT TO SCALE

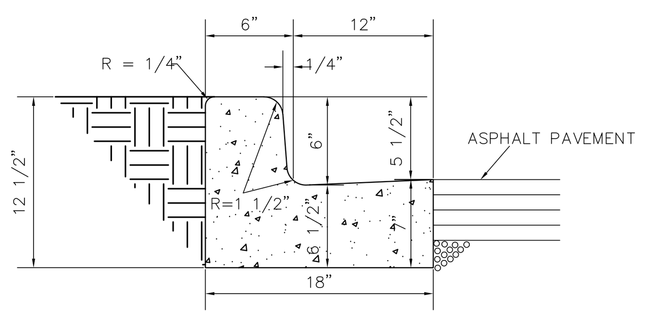

NOTE: INSTALL WERE THE DRAINAGE IS DIRECTED TOWARDS THE CURB

LOW SIDE CONCRETE CURB (L.S. C&G) DETAIL
NOT TO SCALE

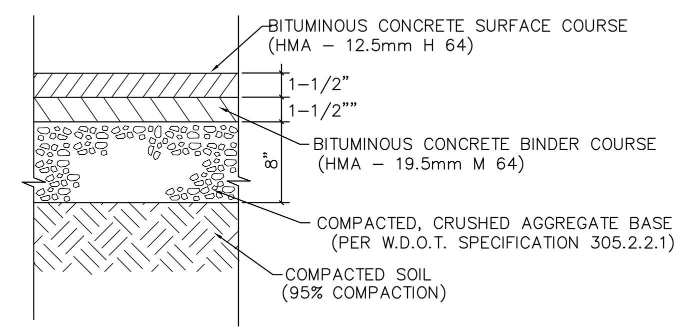

STANDARD ASPHALT PAVEMENT
(PARKING TRAFFIC AREA)
NOT TO SCALE

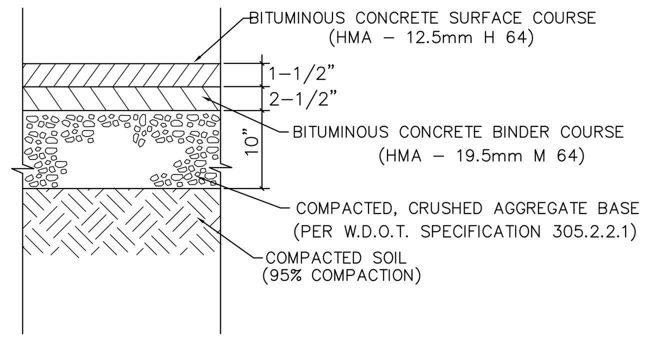

HEAVY DUTY ASPHALT PAVEMENT
(TRUCK TRAFFIC AREA)
NOT TO SCALE
PHASE 2 & 3

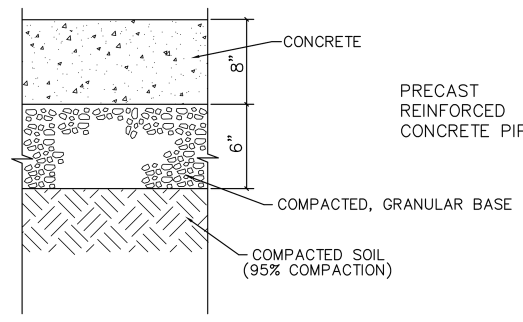

CONCRETE PAVEMENT
(LOADING DOCKS)
NOT TO SCALE
PHASE 2 & 3

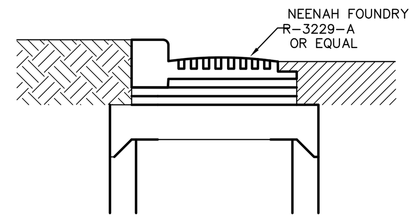

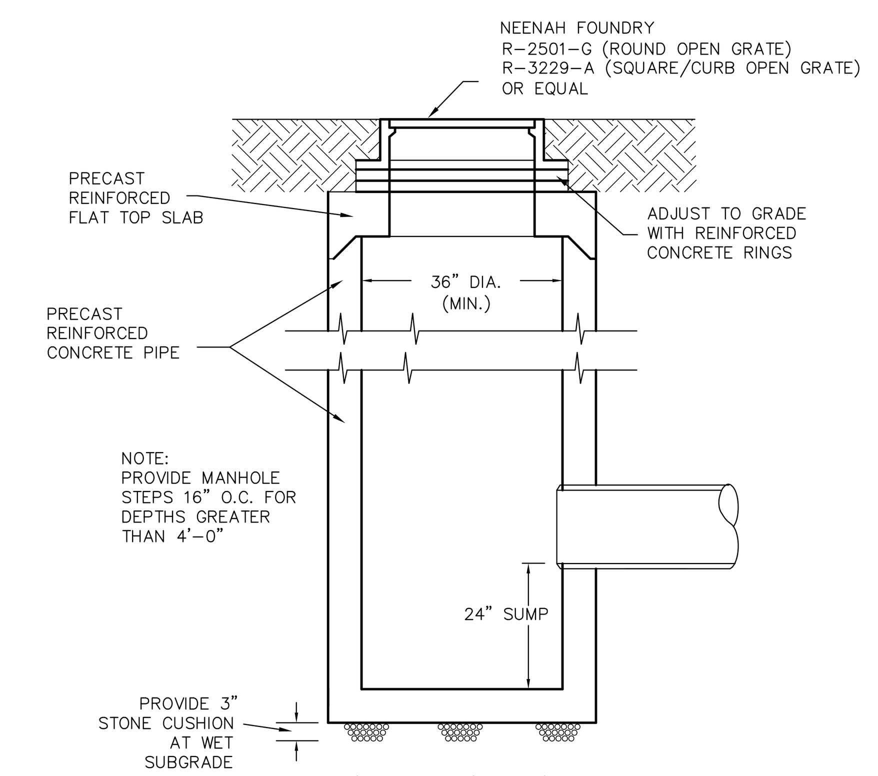

PRECAST CATCH BASIN
NOT TO SCALE

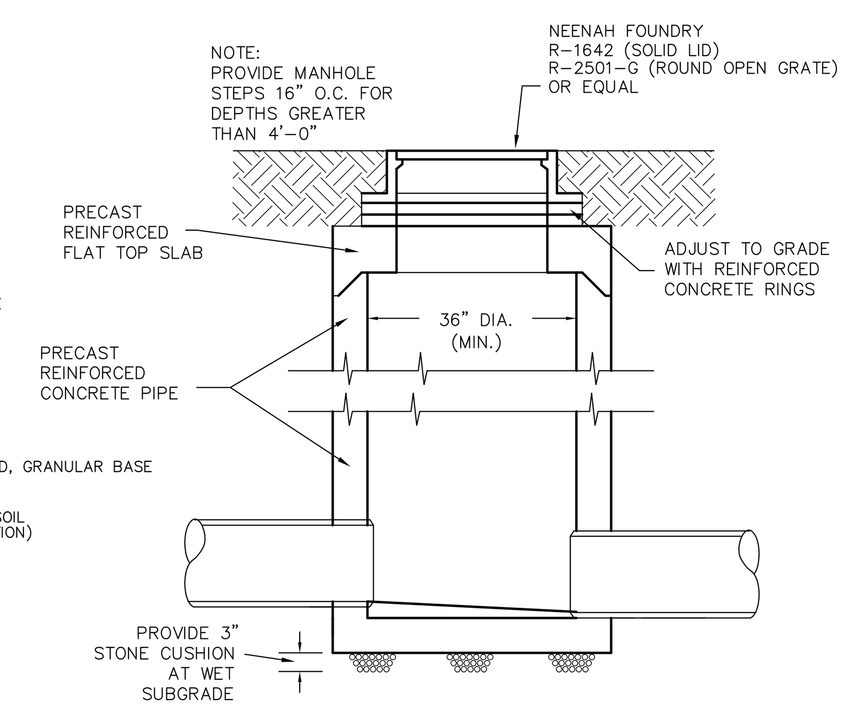

PRECAST STORM INLET/MH
NOT TO SCALE

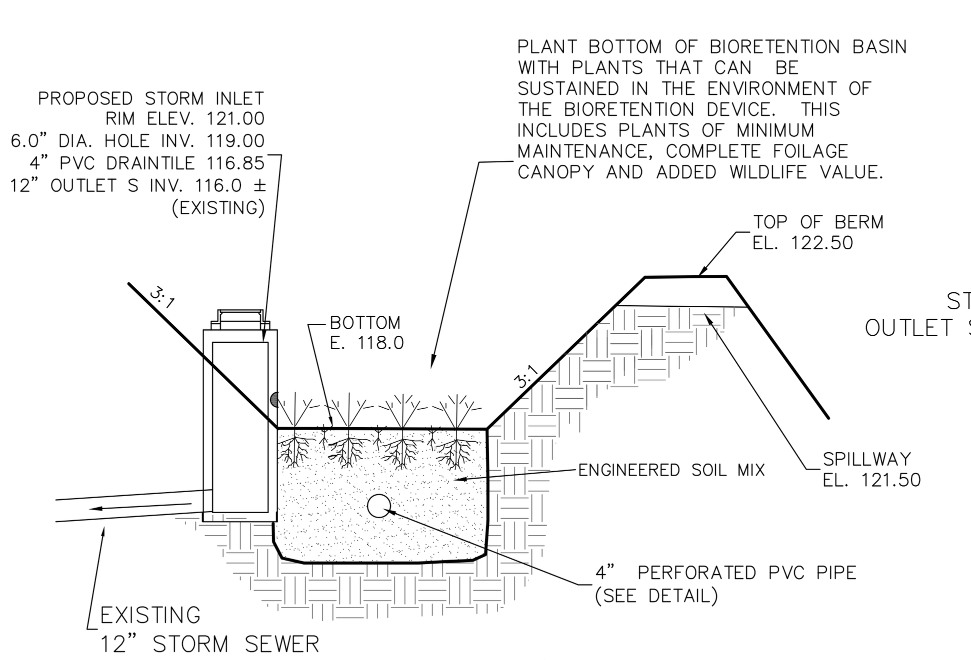

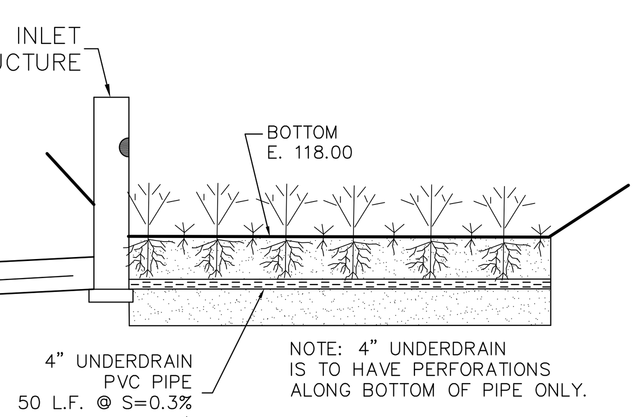

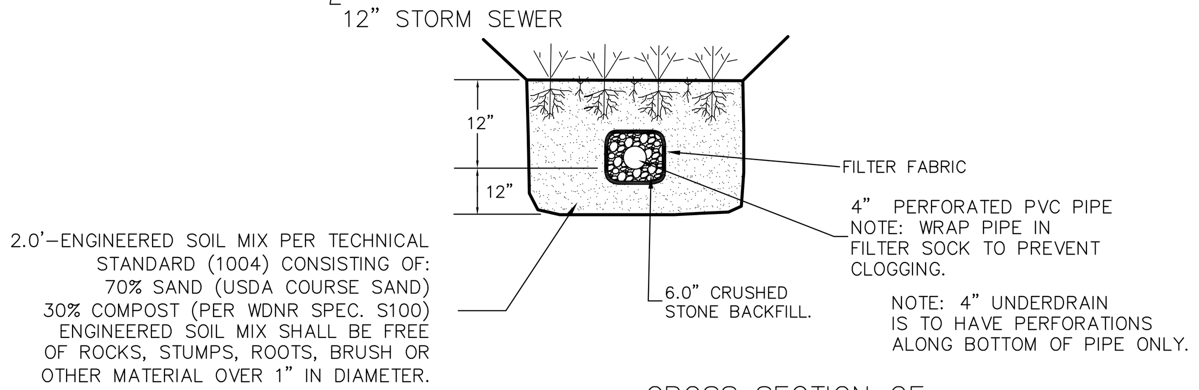

CROSS SECTION OF
PERFORATED PORTION OF UNDERDRAIN

RAIN GARDEN / BIORETENTION BASIN DETAIL
NOT TO SCALE
PHASE 2

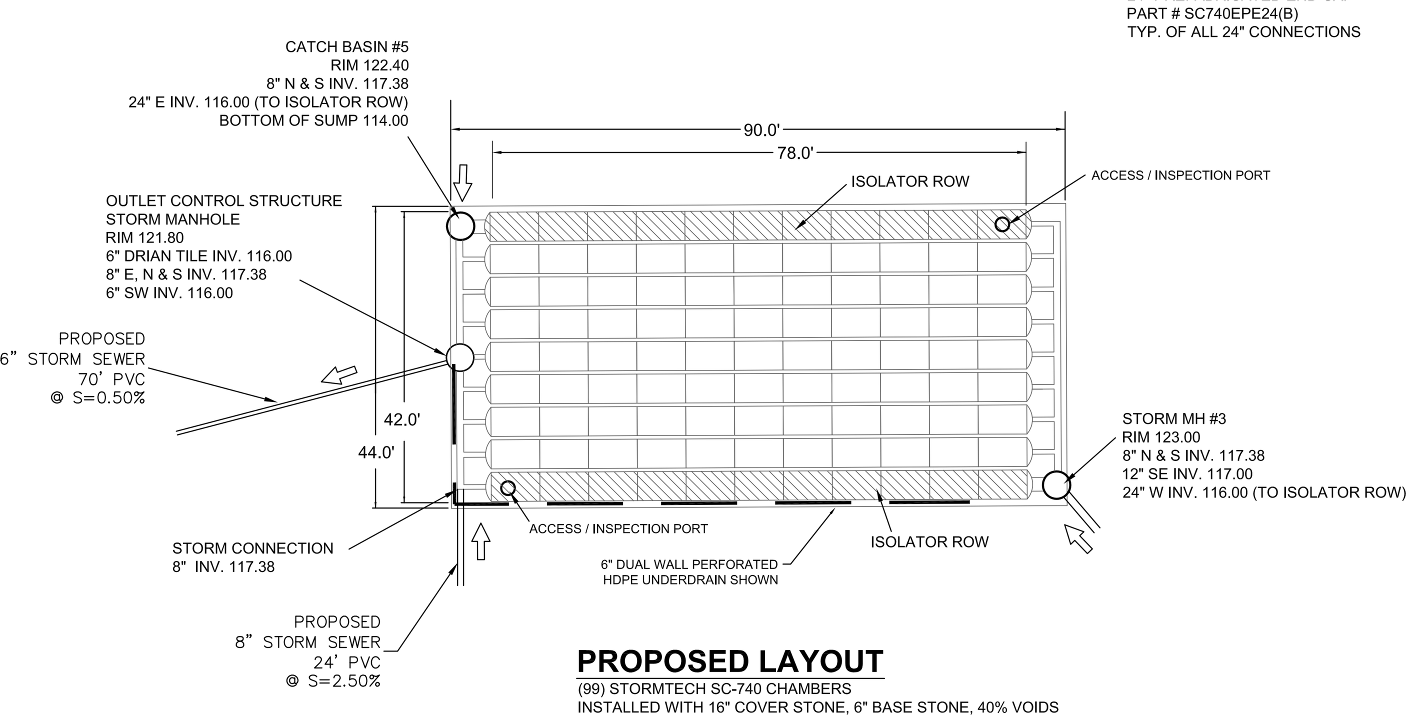

ACCESS / INSPECTION PORT
8" PREFABRICATED END CAP
PART # SC740EPE8(T)
TYP. OF ALL 8" CONNECTIONS
24" PREFABRICATED END CAP
PART # SC740EPE24(B)
TYP. OF ALL 24" CONNECTIONS

PROPOSED LAYOUT
(99) STORMTECH SC-740 CHAMBERS
INSTALLED WITH 16" COVER STONE, 6" BASE STONE, 40% VOIDS

PLAN VIEW
NOT TO SCALE

ACCEPTABLE FILL MATERIALS: STORMTECH SC-310 AND SC-740 CHAMBER SYSTEMS

	MATERIAL LOCATION	DESCRIPTION	AASHTO M43 DESIGNATION	AASHTO M145 DESIGNATION	COMPACTION/DENSITY REQUIREMENT
D	FILL MATERIAL FROM 18" TO GRADE ABOVE CHAMBERS	ANY SOIL/ROCK MATERIALS, NATIVE SOILS OR PER ENGINEER'S PLANS. CHECK PLANS FOR PAVEMENT SUBGRADE REQUIREMENTS.	N/A	N/A	PREPARE PER ENGINEER'S PLANS. PAVED INSTALLATIONS MAY HAVE STRINGENT MATERIAL AND PREPERATION REQUIREMENTS.
C	FILL MATERIAL FOR 6" TO 18" ELEVATION ABOVE CHAMBERS (24" FOR UNPAVED INSTALLATIONS)	GRANULAR WELL-GRADED SOIL/AGGREGATE MIXTURES, < 35% FINES.	3, 357, 4, 467, 5, 56, 57, 6, 67, 68, 7, 78, 8, 89, 9, 10	A-1 A-2 A-3	COMPACT IN 6" LIFTS TO A MINIMUM 95% STANDARD PROCTOR DENSITY. ROLLER GROSS VEHICLE WEIGHT NOT TO EXCEED 12,000 LBS. DYNAMIC FORCE NOT TO EXCEED 20,000 LBS.
B	EMBEDMENT STONE SURROUNDING AND TO A MIN. 6" ELEVATION ABOVE CHAMBERS	CLEAN ANGULAR STONE WITH THE MAJORITY OF PARTICLES BETWEEN ¾ - 2 INCH	3, 357, 4, 457, 5, 56, 57	N/A	NO COMPACTION REQUIRED.
A	FOUNDATION STONE BELOW CHAMBERS	CLEAN ANGULAR STONE WITH THE MAJORITY OF PARTICLES BETWEEN ¾ - 2 INCH	3, 35, 4, 467, 5, 56, 57	N/A	PLATE COMPACT OR ROLL TO ACHIEVE A 95% STANDARD PROCTOR DENSITY.

PLEASE NOTE: THE LISTED AASHTO DESIGNATIONS ARE FOR GRADATIONS ONLY. THE STONE MUST ALSO BE CLEAN, CRUSHED, ANGULAR. FOR EXAMPLE, THE STONE MUST BE SPECIFIED AS CLEAN, CRUSHED, ANGULAR NO. 4 STONE. STORMTECH RECOMMENDS HARDNESS AND DURABILITY CRITERIA FOR USE OF RECYCLED CONCRETE IN A AND B LOCATIONS. CONTACT STORMTECH FOR "TECH SHEET #4" ON "RECYCLED CONCRETE STRUCTURAL BACKFILL"

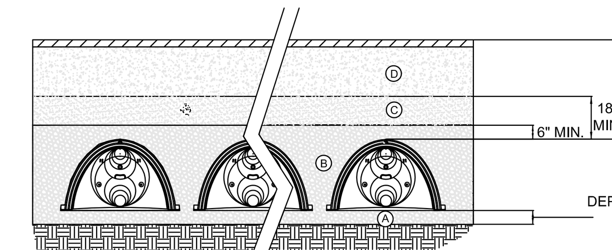

ACCEPTABLE FILL MATERIALS
NOT TO SCALE

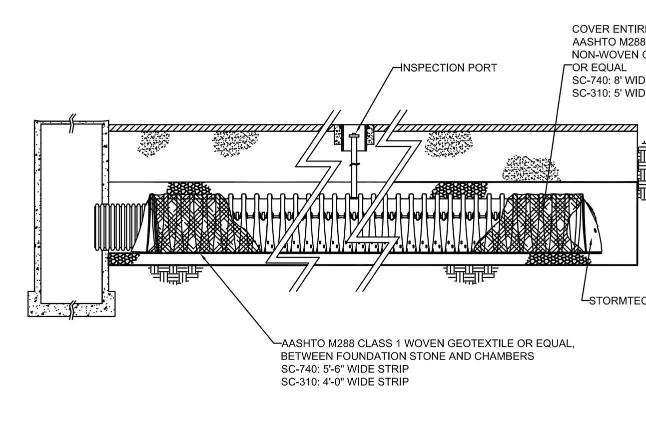

ISOLATER ROW PROFILE VIEW
NOT TO SCALE

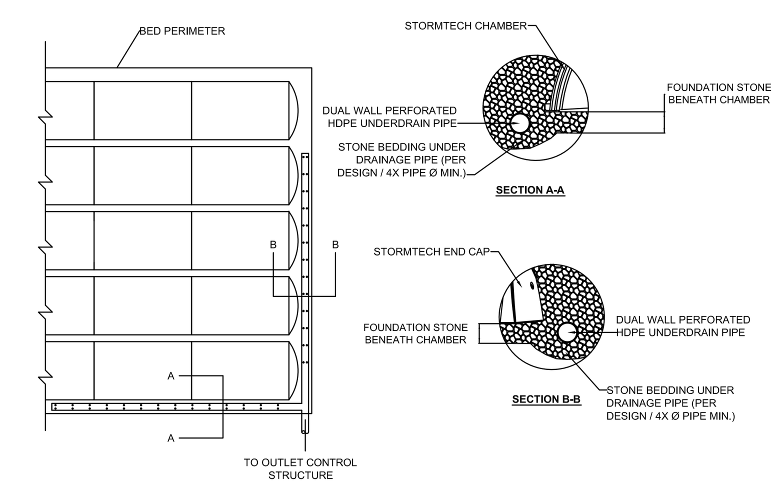

UNDERDRAIN DETAIL
NOT TO SCALE

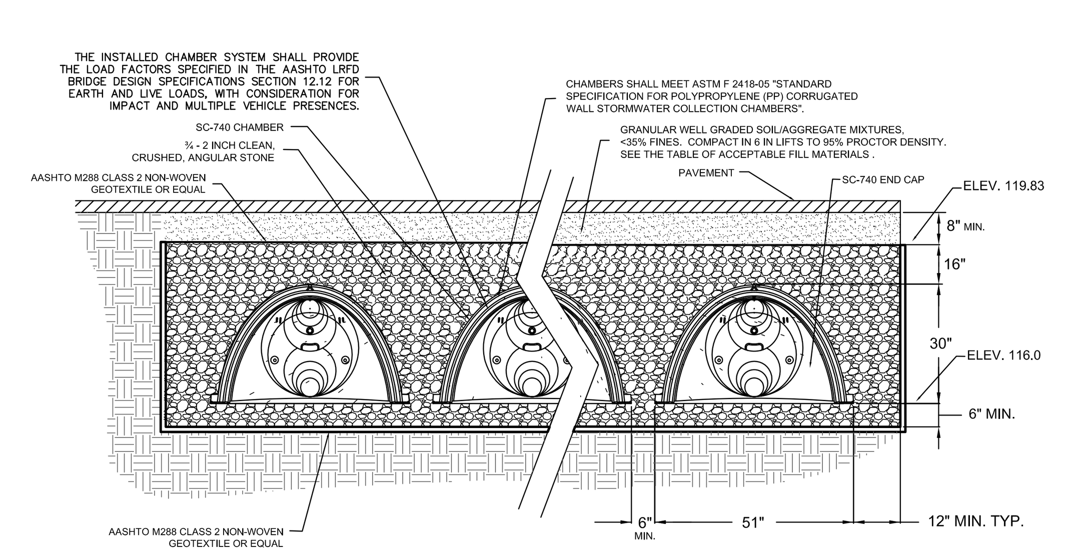

CROSS SECTION
NOT TO SCALE

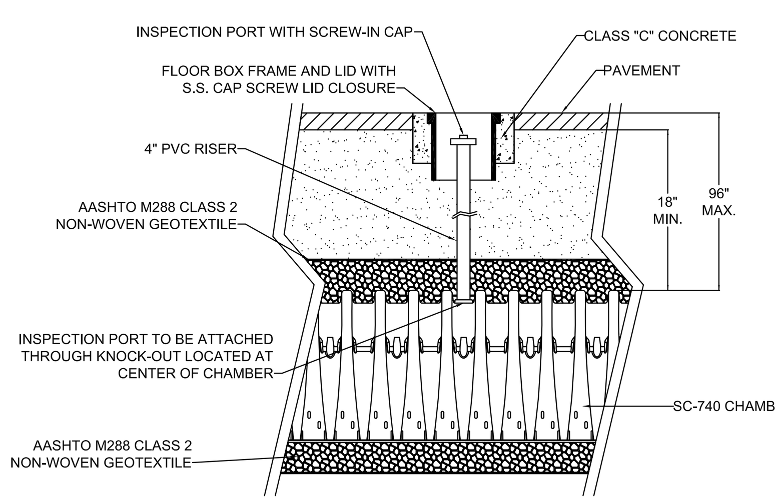

INSPECTION PORT DETAIL
NOT TO SCALE

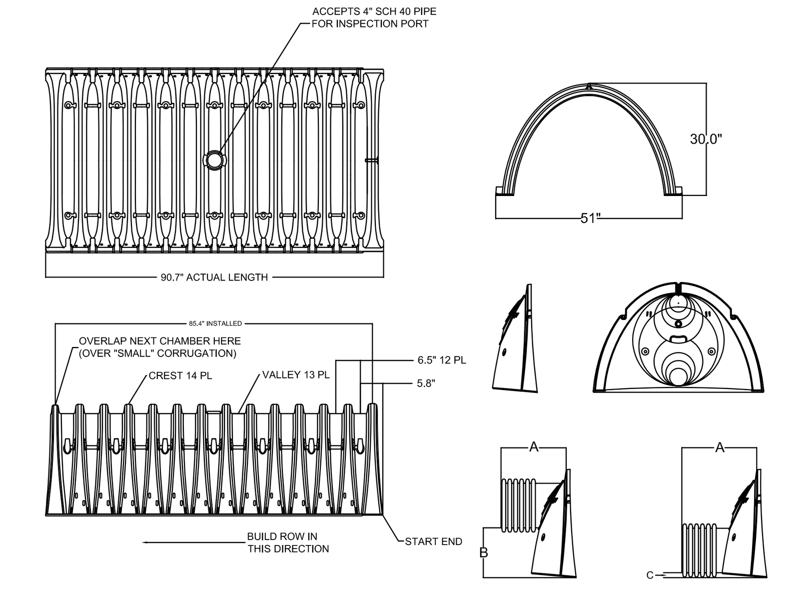

NOMINAL CHAMBER SPECIFICATIONS
SIZE (W x H x INSTALLED LENGTH) - 51.0" x 30.0" x 85.4"
CHAMBER STORAGE - 45.9 CUBIC FEET
MINIMUM INSTALLED STORAGE - 74.9 CUBIC FEET
WEIGHT - 75 LBS.

STUBS AT TOP OF END CAP FOR PARTS NUMBERS ENDING WITH "T"
STUBS AT BOTTOM OF END CAP FOR PARTS NUMBERS ENDING WITH "B"

PART #	CHAMBER	PIPE SIZE	A	B	C
SC740EPE06T	SC-740	6 in (150 mm)	10.90 in (277 mm)	18.50 in (470 mm)	N/A
SC740EPE06B	SC-740	6 in (150 mm)	10.90 in (277 mm)	N/A	0.50 in (13 mm)
SC740EPE08T	SC-740	8 in (200 mm)	12.20 in (310 mm)	16.50 in (419 mm)	N/A
SC740EPE08B	SC-740	8 in (200 mm)	12.20 in (310 mm)	N/A	0.60 in (15 mm)
SC740EPE10T	SC-740	10 in (250 mm)	13.40 in (340 mm)	14.50 in (368 mm)	N/A
SC740EPE10B	SC-740	10 in (250 mm)	13.40 in (340 mm)	N/A	0.70 in (18 mm)
SC740EPE12T	SC-740	12 in (300 mm)	14.70 in (373 mm)	12.50 in (318 mm)	N/A
SC740EPE12B	SC-740	12 in (300 mm)	14.70 in (373 mm)	N/A	1.20 in (30 mm)
SC740EPE15T	SC-740	15 in (375 mm)	18.40 in (467 mm)	9.00 in (229 mm)	N/A
SC740EPE15B	SC-740	15 in (375 mm)	18.40 in (467 mm)	N/A	1.30 in (33 mm)
SC740EPE18T	SC-740	18 in (450 mm)	19.70 in (500 mm)	5.00 in (127 mm)	N/A
SC740EPE18B	SC-740	18 in (450 mm)	19.70 in (500 mm)	N/A	1.60 in (41 mm)
SC740EPE24B	SC-740	24 in (600 mm)	18.50 in (470 mm)	N/A	0.10 in (3 mm)

*NOTE: ALL DIMENSIONS ARE NOMINAL

ALL STUBS, EXCEPT FOR THE SC740EPE24B ARE PLACED AT BOTTOM OF END CAP SUCH THAT THE OUTSIDE DIAMETER OF THE STUB IS FLUSH WITH THE BOTTOM OF THE END CAP. FOR ADDITIONAL INFORMATION CONTACT STORMTECH AT 1-888-892-2694.

* FOR THE SC740EPE24B THE 24" STUB LIES BELOW THE BOTTOM OF THE END CAP APPROXIMATELY 1.75". BACKFILL MATERIAL SHOULD BE REMOVED FROM BELOW THE N-12 STUB SO THAT THE FITTING SETS LEVEL.

TECHNICAL STANDARDS
NOT TO SCALE

STORMWATER CHAMBER SPECIFICATIONS

1. CHAMBERS SHALL BE STORMTECH SC-740, SC-310 OR APPROVED EQUAL.
2. CHAMBERS SHALL CONFORM TO THE REQUIREMENTS OF ASTM F2418-05, "STANDARD SPECIFICATION FOR POLYPROPYLENE (PP) CORRUGATED WALL STORMWATER COLLECTION CHAMBERS".
3. CHAMBER ROWS SHALL PROVIDE CONTINUOUS, UNOBSTRUCTED INTERNAL SPACE WITH NO INTERNAL SUPPORT PANELS.
4. THE STRUCTURAL DESIGN OF THE CHAMBERS, THE STRUCTURAL BACKFILL AND THE INSTALLATION REQUIREMENTS SHALL ENSURE THAT THE LOAD FACTORS SPECIFIED IN THE AASHTO LRFD BRIDGE DESIGN SPECIFICATIONS, SECTION 12.12 ARE MET FOR: 1) LONG-DURATION DEAD LOADS AND 2) SHORT-DURATION LIVE LOADS, BASED ON THE AASHTO DESIGN TRUCK WITH CONSIDERATION FOR IMPACT AND MULTIPLE VEHICLE PRESENCES.
5. ONLY CHAMBERS THAT ARE APPROVED BY THE ENGINEER WILL BE ALLOWED. THE CONTRACTOR SHALL SUBMIT (3 SETS) OF THE FOLLOWING TO THE ENGINEER FOR APPROVAL BEFORE DELIVERING CHAMBERS TO THE PROJECT SITE:
   a. A STRUCTURAL EVALUATION BY A REGISTERED STRUCTURAL ENGINEER THAT DEMONSTRATES THAT THE LOAD FACTORS SPECIFIED IN THE AASHTO LRFD BRIDGE DESIGN SPECIFICATIONS, SECTION 12.12 ARE MET. THE 50-YEAR CREEP MODULUS DATA SPECIFIED IN ASTM F2418-05 MUST BE USED AS A PART OF THE AASHTO STRUCTURAL EVALUATION TO VERIFY LONG-TERM PERFORMANCE.
   b. A CERTIFICATION BY THE MANUFACTURER THAT THE CHAMBERS ARE IN ACCORDANCE WITH ASTM F2418-05.
6. CHAMBERS SHALL BE PRODUCED AT AN ISO 9001 CERTIFIED MANUFACTURING FACILITY.
7. ALL DESIGN SPECIFICATIONS FOR CHAMBERS SHALL BE IN ACCORDANCE WITH THE MANUFACTURER'S LATEST DESIGN MANUAL.
8. THE INSTALLATION OF CHAMBERS SHALL BE IN ACCORDANCE WITH THE MANUFACTURER'S LATEST INSTALLATION INSTRUCTIONS.

STORMTECH PRODUCT SPECIFICATIONS

1.0 GENERAL
1.1 STORMTECH CHAMBERS ARE DESIGNED TO CONTROL STORMWATER RUNOFF. AS A SUBSURFACE RETENTION SYSTEM, STORMTECH CHAMBERS RETAIN AND ALLOW EFFECTIVE INFILTRATION OF WATER INTO THE SOIL. AS A SUBSURFACE DETENTION SYSTEM, STORMTECH CHAMBERS DETAIN AND ALLOW FOR THE METERED FLOW OF WATER TO AN OUTFALL.

2.0 CHAMBER PARAMETERS
2.1 THE CHAMBER SHALL BE INJECTION MOLDED OF POLYPROPYLENE RESIN TO BE INHERENTLY RESISTANT TO ENVIRONMENTAL STRESS CRACKING (ESCR), AND TO MAINTAIN ADEQUATE STIFFNESS THROUGH HIGHER TEMPERATURES EXPERIENCED DURING INSTALLATION AND SERVICE.
2.2 THE NOMINAL CHAMBER DIMENSIONS OF THE STORMTECH SC-740 SHALL BE 30.0 INCHES TALL, 51.0 INCHES WIDE AND 90.7 INCHES LONG. THE NOMINAL CHAMBER DIMENSIONS OF THE STORMTECH SC-310 SHALL BE 16.0 INCHES TALL, 34.0 INCHES WIDE AND 90.7 INCHES LONG. THE INSTALLED LENGTH OF A JOINED CHAMBER SHALL BE 85.4 INCHES.
2.3 THE CHAMBER SHALL HAVE A CONTINUOUSLY CURVED SECTION PROFILE.
2.4 THE CHAMBER SHALL BE OPEN-BOTTOMED.
2.5 THE CHAMBER SHALL INCORPORATE AN OVERLAPPING CORRUGATION JOINT SYSTEM TO ALLOW CHAMBER ROWS OF ALMOST ANY LENGTH TO BE CREATED. THE OVERLAPPING CORRUGATION JOINT SYSTEM SHALL BE EFFECTIVE WHILE ALLOWING A CHAMBER TO BE TRIMMED TO SHORTEN ITS OVERALL LENGTH.
2.6 THE NOMINAL STORAGE VOLUME OF A JOINED STORMTECH SC-740 CHAMBER SHALL BE 74.9 CUBIC FEET PER CHAMBER WHEN INSTALLED PER STORMTECH'S TYPICAL DETAILS (INCLUDES THE VOLUME OF CRUSHED ANGULAR STONE WITH AN ASSUMED 40% POROSITY). THIS EQUATES TO 2.2 CUBIC FEET OF STORAGE/SQUARE FOOT OF BED. THE NOMINAL STORAGE VOLUME OF AN INSTALLED STORMTECH SC-310 CHAMBER SHALL BE 31.0 CUBIC FEET PER CHAMBER WHEN INSTALLED PER STORMTECH'S TYPICAL DETAILS (INCLUDES THE VOLUME OF CRUSHED ANGULAR STONE WITH AN ASSUMED 40% POROSITY). THIS EQUATES TO 1.3 CUBIC FEET OF STORAGE/SQUARE FOOT OF BED.
2.7 THE CHAMBER SHALL HAVE FORTY-EIGHT ORIFICES PENETRATING THE SIDEWALLS TO ALLOW FOR LATERAL CONVEYANCE OF WATER.
2.8 THE CHAMBER SHALL HAVE TWO ORIFICES NEAR ITS TOP TO ALLOW FOR EQUALIZATION OF AIR PRESSURE BETWEEN ITS INTERIOR AND EXTERIOR.
2.9 THE CHAMBER SHALL HAVE BOTH OF ITS ENDS OPEN TO ALLOW FOR UNIMPEDED HYDRAULIC FLOWS AND VISUAL INSPECTIONS DOWN A ROW'S ENTIRE LENGTH.
2.10 THE CHAMBER SHALL HAVE 14 CORRUGATIONS.
2.11 THE CHAMBER SHALL HAVE A CIRCULAR, INDENTED, FLAT SURFACE ON THE TOP OF THE CHAMBER FOR AN OPTIONAL 4-INCH INSPECTION PORT.
2.12 THE CHAMBER SHALL BE ANALYZED AND DESIGNED USING AASHTO METHODS FOR THERMOPLASTIC CULVERTS CONTAINED IN THE LRFD BRIDGE DESIGN SPECIFICATIONS, 2ND EDITION, INCLUDING INTERIM SPECIFICATIONS THROUGH 2001. DESIGN LIVE LOAD SHALL BE THE AASHTO HS20 TRUCK. DESIGN SHALL CONSIDER EARTH AND LIVE LOADS AS APPROPRIATE FOR THE MINIMUM TO MAXIMUM SPECIFIED DEPTH OF FILL.
2.13 THE CHAMBER SHALL BE MANUFACTURED IN AN ISO 9001:2000 CERTIFIED FACILITY.

3.0 END CAP PARAMETERS
3.1 END CAPS WITH PREFABRICATED PIPE CONNECTIONS SHALL BE INJECTION MOLDED FROM POLYETHYLENE RESIN.
3.2 THE END CAP SHALL BE DESIGNED TO FIT INTO ANY CORRUGATION OF A CHAMBER, WHICH ALLOWS: CAPPING A CHAMBER THAT HAS ITS LENGTH TRIMMED; SEGMENTING ROWS INTO STORAGE BASINS OF VARIOUS LENGTHS.
3.3 THE END CAP SHALL HAVE SAW GUIDES TO ALLOW EASY CUTTING FOR VARIOUS DIAMETERS OF PIPE THAT MAY BE USED TO INLET THE SYSTEM.
3.4 THE END CAP SHALL HAVE EXCESS STRUCTURAL ADEQUACIES TO ALLOW CUTTING AN ORIFICE OF ANY SIZE AT ANY INVERT ELEVATION.
3.5 THE PRIMARY FACE OF AN END CAP SHALL BE CURVED OUTWARD TO RESIST HORIZONTAL LOADS GENERATED NEAR THE EDGES OF BEDS.
3.6 THE END CAP SHALL BE MANUFACTURED IN AN ISO 9001:2000 CERTIFIED FACILITY.

STORMTECH GENERAL NOTES

1. STORMTECH LLC ("STORMTECH") REQUIRES INSTALLING CONTRACTORS TO USE AND UNDERSTAND STORMTECH'S LATEST INSTALLATION INSTRUCTIONS PRIOR TO BEGINNING SYSTEM INSTALLATION.
2. OUR TECHNICAL SERVICES DEPARTMENT OFFERS INSTALLATION CONSULTATIONS TO INSTALLING CONTRACTORS. CONTACT OUR TECHNICAL SERVICES REPRESENTATIVE AT LEAST 30 DAYS PRIOR TO SYSTEM INSTALLATION TO ARRANGE A PRE-INSTALLATION CONSULTATION. OUR REPRESENTATIVES CAN THEN ANSWER QUESTIONS OR ADDRESS COMMENTS ON THE STORMTECH CHAMBER SYSTEM AND INFORM THE INSTALLING CONTRACTOR OF THE MINIMUM INSTALLATION REQUIREMETNS BEFORE BEGINNING THE SYSTEM'S CONSTRUCTION. CALL **1-888-892-2694** TO SPEAK TO A TECHNICAL SERVICES REPRESENTATIVE OR VISIT **WWW. STORMTECH.COM** TO RECIEVE A COPY OF OUR INSTALLTION INSTRUCTIONS.
3. STORMTECH'S REQUIREMENTS FOR SYSTEMS WITH PAVEMENT DESIGN (ASPHALT, CONCRETE PAVERS, ETC.):MINIMUM COVER IS 18" NOT INCLUDING PAVEMENT; MAXIMUM COVER IS 96" INCLUDING PAVEMENT. FOR INSTALLATIONS THAT DO NOT INCLUDE PAVEMENT, WHERE RUTTING FROM VEHICLES MAY OCCUR, MINIMUM ROUIRED COVER IS 24", MAXIMUM COVER IS 96".
4. THE CONTRACTOR MUST REPORT ANY DISCREPANCIES WITH CHAMBER FOUNDATION MATERIALS BEARING CAPACITIES TO THE DESIGN ENGINEER.
5. AASHTO M288 CLASS 2 NON-WOVEN GEOTEXTILE (FILTER FABRIC) MUST BE USED AS INDICATED IN THE PROJECT PLANS.
6. STONE PLACEMENT BETWEEN CHAMBERS ROWS AND AROUND PERIMETER MUST FOLLOW INSTRUCTIONS AS INDICATED IN THE MOST CURRENT VERSION OF STORMTECH'S INSTALLATION INSTRUCTIONS.
7. BACKFILLING OVER THE CHAMBERS MUST FOLLOW REQUIREMENTS AS INDICATED IN THE MOST CURRENT VERSION OF STORMTECH'S INSTALLATION INSTRUCTIONS.
8. THE CONTRACTOR MUST REFER TO STORMTECH'S INSTALLATION INSTRUCTIONS FOR A TABLE OF ACCEPTABLE VEHICLE LOADS AT VARIOUS DEPTHS OF COVER. THIS INFORMATION IS ALSO AVAILABLE AT STORMTECH'S WEBSITE: **WWW.STORMTECH.COM.** THE CONTRACTOR IS RESPONSIBLE FOR PREVENTING VEHICLES THAT EXCEED STORMTECH'S REQUIREMENTS FROM TRAVELING ACROSS OR PARKING OVER THE STORMWATER SYSTEM. TEMPORARY FENCING, WARNING TAPE AND APPROPRIATELY LOCATED SIGNS ARE COMMONLY USED TO PREVENT UNAUTHORIZED VEHICLES FROM ENTERING SENSITIVE CONSTRUCTION AREAS.
9. THE CONTRACTOR MUST APPLY EROSION AND SEDIMENT CONTROL MEASURES TO PROTECT THE STORMWATER SYSTEM DURING ALL PHASES OF SITE CONSTRUCTION PER LOCAL CODES AND DESIGN ENGINEER'S SPECIFICATIONS.
10. STORMTECH PRODUCT WARRANTY IS LIMITED. SEE CURRENT PRODUCT WARRANTY FOR DETAILS. TO ACQUIRE A COPY CALL STORMTECH AT **1-888-892-2694** OR VISIT **WWW.STORMTECH.COM.**

CJ engineering
civil design and consulting
9205 W. Center Street
Suite 214
Milwaukee, WI 53222
PH. (414) 443-1312
FAX (414) 443-1317
www.cj-engineering.com

METAL ERA
1600 & 1700 AIRPORT ROAD
WAUKESHA, WISCONSIN

CJE NO.: 1506R0
AUGUST 24, 2015

SITE DETAILS

C3.0