GENERAL NOTES AND SPECIFICATIONS

GENERAL NOTES

DEVIATION FROM PLANS - Any deviation from these plans shall have been consulted with and documented by the supervising professional.

NON-CONTRACT ITEMS - Items may appear on these plans that are done by others and are not part of the Walters Buildings' contract.

STRUCTURAL PERFORMANCE - Walters Buildings and the Certifying Engineer's responsibility is limited to the structural performance of the post frame shell and listed items. The parties are not acting as the supervising professional of record for onsite supervision of construction, installation, or inspection. Check with local municipality for any special requirements.

SPECIFICATIONS

SITE WORK - The building site shall be graded to provide drainage away from the building. Maintain the grade levels shown on the plan around the building.

FOUNDATION PLACEMENT NOTES - All footings or Sakrete shall be placed on undisturbed virgin soil remaining consistent with the soil bearing capacity as noted in the 'LOADS' Table. If any loose soil is found at footing locations notify engineer at once so adjustments to footings can be made accordingly, as may be necessary.

Column holes are dug per the dimensions shown on the foundation plan (S1) and ready-mix concrete pads or dry concrete pads are poured in place (Note plans for size and type). Additional concrete-mix is poured around the base of the column.

Backfill around columns above footings shall be placed in 8" maximum depth layers and thoroughly compacted. Backfill material shall remain consistent with the presumed lateral soil pressure noted in the 'LOADS'. Typical soil types meeting the requirements include firm sand and loose sandy gravel. Backfill of excavated holes in soil around wood columns may be made with concrete at contractors option.

Foundations shall not be placed prior to confirmation of the soil type at a depth of 5 feet below the bottom of the footing.

CONCRETE (if applicable) - Concrete placement shall be in accordance with ACI 318-14.

Design mixes shall be obtained from the following:
1. Strength to be a minimum of 3000 PSI at 28 days for walls and footings.
2. Strength to be a minimum of 3500 PSI at 28 days for floor slabs.
3. Slump not to exceed 4 inches.

REINFORCING STEEL (if applicable) - Reinforcing steel shall be placed in accordance with CRSI Standards.

Steel reinforcing shall meet the requirements of the "Standard Specifications" for:
1. Billet-Steel Concrete Reinforcing Bars Grade 60 (ASTM designation A-615).
2. All steel bars shall meet the requirements of ASTM designation A-615. All welded wire mesh for concrete reinforcement shall meet the requirement shall meet the requirements set forth in Standard Specification (ASTM designation A-185). The reinforcement shall not be painted and must be free from grease, dirt or deep rust when placed in the work. To prevent rust, the material must be protected from moisture. The reinforcement shall be protected by the proper thickness of concrete.

Where not otherwise shown, the thickness of concrete over the reinforcement shall be:
1. Where concrete is deposited against the ground without the use of forms, the thickness of concrete shall not be less than 3 inches.
2. Where concrete is exposed to weather, the thickness of concrete shall not be less than 1 1/2 inches.
3. In columns or pedestals not exposed to weather or ground, the thickness of concrete shall not be less than 1 1/2 inches.

ANCHOR BOLTS (if applicable) - The contractor shall set all anchor bolts to receive the building. The bolts shall be the size as shown or required. They may be drilled into place as allowed.

STRUCTURAL LAMINATED COLUMNS - The No. 2 or better southern yellow pine S4S structural columns used in this Walters Building shall consist of a 3 or more members sized as shown on the plans, steel plate laminated, and designed to meet the structural load requirements. Column lumber is kiln-dried to a 19% moisture content.

The members for use in contact with the soil shall be pressure treated to a retention of 0.8 pounds of Copper Chromate Arsenate Type C, oxide type formulation, as listed in American Wood Preservers Assoc. Standard U1. The treatment process shall be as described in the current AWPA Standard U1 Commodity Specification A, Use Category 4B.

Splices in columns shall conform to Jack Walters & Sons Corp. Standard details and the columns shall bear a permanent Jack Walters & Sons Corp. stamp in a visible location. Wisconsin DILHR Material Approval No. 201610-W.

SPLASHBOARDS - Splashboards are S4S #2 or better Southern Pine, pressure treated to a net retention of 0.15 pounds per cubic foot with MCA copper based treatment. Approved for G-90 galvanized protected connectors and for aluminum contact. Building code compliant - ESR #2240. One row is furnished for building on a level grade.

FRAMING - Side girts are as specified on drawings made of S4S 1650 MSR SPF or better lumber with all joints staggered at attachment to columns, unless otherwise noted. Roof purlins are as specified on drawings spaced on edge made of S4S 1650 MSR SPF or better, unless otherwise noted. Studwalls are as specified on drawings made of 1650 MSR SPF or better, unless otherwise noted.

All other framing lumber is standard grade or better.

All wood design shall conform to ANSI/AF&PA NDS-2015.

WALL BRACING - 2" x 6" bracing in all unobstructed corners. 2" x 4" lateral truss ties and 2" x 6" end bracing as shown on plans.

STRUCTURAL STEEL (if applicable) - Design shall conform to the latest AISC Specifications.

SIDING PANELS - Structural Steel Grade 80 with G-90 Sheet, pretreatment, urethane primer, and Modified silicon polyester topcoat. Conforms to ASTM A 653.

ROOFING PANELS - Structural Steel Grade 80 with G-90 Sheet, pretreatment, urethane primer, and Modified silicon polyester topcoat. Conforms to ASTM A 653.

TRIM - Die formed trim of Structural Steel Grade 80 with G-90 Sheet, pretreatment, urethane primer, and Modified silicon polyester topcoat on gables, ridges, corners, base, windows and doors.

WALL FINISHES - Exterior cracks, joints, and holes in the buildings envelope are caulked, gasketed, weatherstripped, or otherwise sealed. Interior finish of walls & ceiling shall have a flame spread rating of less than 200. Interior finish Class III Rating - flame spread rating less than 200 and smoke development rating of less than 450.

MASONRY WORK (if applicable) - All masonry work shall be performed by skilled workmen in a competent manner. Joints shall be clean, straight, plumb, level and uniform. Chipped, cracked and broken units shall not be used. Transverse reinforcing shall be used every second course of all masonry block walls. Provide three solid courses for bearing. "Dur-O-Wall" shall be standard weight. Lap all reinforcements 8 inches. All masonry shall conform to ACI 530-11/ASCE 5-11/TMS 402-11.

FIRE WALL NON COMBUSTIBLE PENETRATIONS (if applicable) - shall be tested in accordance with ASTM E119 as part of fire resistance rated assembly or shall be protected by an approved through penetration fire stop system. Combustible penetrations - combustible pipes etc., shall be tested in accordance with ASTM E119 or shall be protected by an approved through penetration fire stop system. Fire dampers - any dampers through fire walls need a three-hour rating.

SOUND & INSULATION - Exposed insulation shall have a flame spread rating of 25 or less and smoke development rating of 450 or less. Concealed shall have a flame spread rating of 75 or less and a smoke development rating of 450 or less. Vapor retarder shall be installed to the warm side of the insulation.

ROOF TRUSSES - Factory assembled with 16 or 20 gauge galvanized steel Eagle truss plates as required and graded kiln dried lumber as specified. In-plant quality control inspection is conducted under the auspices of the Truss Plate Institute. Trusses are designed with current standards and specifications for the stated loading.

TRUSS BRACING - All wood members must be properly braced until the complete structural system has been completed. Erection bracing is supplied by the erection contractor. The contractor must refer to TPI publication BCSI-B10 POST FRAME SUMMARY SHEET, "POST FRAME TRUSS INSTALLATION & TEMPORARY RESTRAINT / BRACING" for erection, handling and bracing guidance.

Refer to the truss detail for permanent lateral bracing requirements. All lateral bracing specified on the truss detail are intended to provide lateral restraint for individual truss members only. Additional permanent structural bracing specified on the drawings is supplied with the building package and must be installed as shown.

ATTIC DRAFTSTOPS (if applicable) - Maintain attic draft stops every 3,000 sq. ft. for enclosed attic spaces. Minimum attic access opening is 20"x30".

SKYLIGHTS (if applicable) - 0.06" nominal translucent FRP Alsynite/Structoglas Building Panel. These panels are used as exterior eavelight, skylight or roof panel applications.

HEATING AND VENTILATING (if applicable) - All work shall be done in strict accordance with state and local codes. Others shall submit separate plans and calculations for approval.

ELECTRICAL (if applicable) - All work shall be done in strict accordance with state and local codes. Electrical work in not part of this plan.

PLUMBING (if applicable) - All work shall be done in strict accordance with state and local codes. Provide thermal protection (insulation) of pipes under lavatory. Plumbing work is not part of this plan.

DRINKING FACILITIES (if applicable) - Drinking facilities (not in toilet rooms) must be provided in all public buildings.

STEEL PANEL SCREWING PATTERN

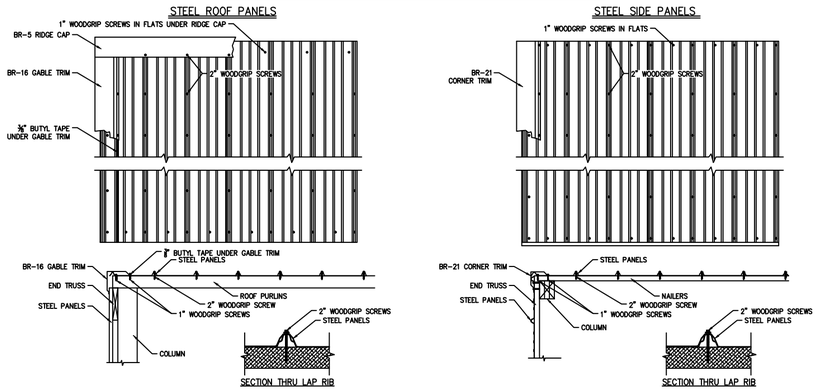

STANDARD ROUGH OPENINGS FOR STANDARD PLYCO WALKDOORS

CALL SIZE	DOOR	ROUGH OPENING WIDTH (in) x HEIGHT (in)
3068	COMMERCIAL PLYCO 20 SERIES	40⅜" x 81¾"
6068	COMMERCIAL PLYCO 20 SERIES	77 7/16" x 81¾"
3068	3-HOUR RATED PLYCO 22 SERIES	40½" x 82⅜"
6068	3-HOUR RATED PLYCO 22 SERIES	76½" x 82⅜"
3068	THERMAL BREAK PLYCO 92 TB ALUMINUM FRAME SERIES	40½" x 82½"
6068	THERMAL BREAK PLYCO 92 TB SERIES STANDARD W/ MULLION	78¼" x 82½"
6068	THERMAL BREAK PLYCO 92 TB SERIES OPTIONAL W/ ASTRAGAL	77⅝" x 82½"

FASTENING SCHEDULE

FLOOR CONSTRUCTION		
Built-up Girders & Beams	20d common	32" o.c. direct
Bridging to Joists	8d common	2 ea. direct end
Floor Joists to Studs	10d common	5 direct or 3 direct
Floor Joists to Studs (W/ceiling joist)	10d common	2 direct
Floor Joists to Sill or Girder	8d common	3 toe nail
Ledger Strip	16d common	3 ea. direct joist
1" Subflooring (6" or less)	8d common	2 ea. direct joist
1" Subflooring (8" or more)	8d common	3 ea. direct joist
2" Subflooring	16d common	2 ea. direct joist
Particleboard Underlayment (1/4"-3/4")	6d annular threaded	6" o.c. direct edges & 12" o.c. intermediate
WOOD STRUCTURAL PANEL SUBFLOORING		
1/2" or less	6d common or 6d annular/spiral thread	6" o.c. direct edges & 12" o.c. intermediate
19/32" - 3/4"	8d common or 6d annular/spiral thread	6" o.c. direct edges & 12" o.c. intermediate
7/8" - 1-1/8"	10d common or 8d ring shank	6" o.c. direct edges
	8d annular or spiral thread	6" o.c. intermediate
1/2" or less	16ga galvanized wire staples	4" o.c. edges & 7" o.c. intermediate
19/32, 5/8"	3/8" min. crown, 1-5/8" length	2-1/2" o.c. edges & 4" o.c. intermediate
WALL CONSTRUCTION		
Stud to sole plate	8d common	4 toe nail
	16d common	2 direct nail
Stud to cap plate	16d common	2 toe nail or 2 direct nail
Double studs	10d common	12" o.c. direct
Corner studs	16d common	24" o.c. direct
Sole plate to joist or blocking	16d common	16" o.c.
Interior-braced wall sole plate-parallel joist	16d common	12" o.c.
Double cap plate	10d common	16" o.c. direct nail
Cap plate laps	10d common	2 direct nail
Ribbon strip, 6" or less	10d common	2 ea. direct bearing
Ribbon strip, 6" or more	10d common	3 ea. direct bearing
Diagonal brace (to stud & plate)	8d common	2 ea. direct bearing
Interior-braced wall top plate-joist/blocking	10d common	12" o.c.
Tail beams to headers (nailing permitted)	20d common	1 ea. end 4 sq.ft. floor area
Header beams to trimmers (nailing permitted)	20d common	1 ea. end 8 sq.ft. floor area
Continuous header to stud	8d common	4 toe nail
Continuous header, two pieces	16d common	16" o.c. direct
ROOF & CEILING CONSTRUCTION		
Ceiling joists to plate	16d common	3 toe nail
Ceiling joists (laps over partition)	10d common	3 direct nail
Ceiling joists (parallel to rafter)	10d common	3 direct nail
Collar beam	10d common	3 direct
Roof rafter to plate	8d common	3 toe nail
Roof rafter to ridge	16d common	2 toe nail or direct nail
Jack rafter to hip	10d common	3 toe nail
	16d common	2 direct nail
1" roof decking (6" width or less)	8d common	2 ea. direct rafter
1" roof decking (over 6" width)	8d common	3 ea. direct rafter
WALL & ROOF SHEATHING		
1" wall sheathing (<8")	8d common	2 ea. direct stud
1" wall sheathing (over 8" width)	8d common	3 ea. direct stud
1/2" fiberboard sheathing	1-1/2" GV roofing nail or 6d common or 16ga staple, 1-1/8" w/min. crown of 7/16"	3" o.c. exterior edge, 6" o.c. intermediate
25/32" fiberboard sheathing	1-3/4" GV roofing nail or 8d common or 16ga staple, 1-1/2" w/min. crown of 7/16"	3" o.c. exterior edge, 6" o.c. intermediate
Gypsum sheathing	12ga 1-1/4" large head, corrosion resistant	4" o.c. on edge, 8" o.c. intermediate
Gypsum sheathing (seismic tracing)	11ga 1-3/4" long 7/16" head	4" o.c. all bearing points
Particleboard wall sheathing (1/2" or less)	6d common	6" o.c. direct edges & 12" o.c. intermediate
Particleboard wall sheathing (5/8" or less)	8d common	6" o.c. direct edges & 12" o.c. intermediate
WOOD STRUCTURAL PANEL ROOF & WALL SHEATHING		
1/2" or less	6d common (walls); 8d common (roofs)	6" o.c. direct edges & 12" o.c. intermediate
19/32"-1"	8d common	6" o.c. direct edges & 12" o.c. intermediate
1" or greater	10d common	6" o.c. direct edges & 12" o.c. intermediate
1/2" or less	16ga GV wire staples	4" o.c. edges & 8" o.c. intermediate
	3/8" min. crown 1" length + panel thickness	
19/32", 5/8"	same as immediately above	2-1/2" o.c. edges & 5" o.c. intermediate
Shingles	#14 B&S ga corrosion resistant	2 ea. bearing
Watherboarding	8d corrosion resistant	2 ea. bearing

Note A: Single nails shall penetrate not less than 3/4" into nailing strips, sheathing or supporting construction except as otherwise provided for in Section 1507.0.

Note B: For regions having a basic wind speed of 90 mph or greater where the main roof height is less than 25 ft. and for regions having basic wind speed of 80 mph or less, nails which attach wood structural panel roof sheating to gable end wall framing shall be spaced 6" o.c. Where basic wind speed is greater than 80 mph, nails which attach panel roof sheathing to intermediate supports shall be spaced 6" o.c. of a minimum of a 48" distance from ridges, eaves & gable end walls; & 4" o.c. to gable end wall framing.

Note C: For regions having a basic wind speed of 90 mph greater, 8d deformed shank nails shall be utilized to attach wood structural panel roof sheathing to framing within a minimum 48" distance from gable end walls provided the mean roof height is between 25' and 35'. For roof heights greater than 35' in a 90 mph or greater wind region, attachment of wood structural panel roof sheathing shall be designed for the wind loads in Section 1609.0.

Note D: Nails shall be spaced 6"" o.c. direct to panel edges and 6" o.c. to intermediate supports where panel spans are 48" o.c. or greater.

Note E: 1" = 25.4mm, 1' = 304.8mm. "

ABBREVIATIONS

ABV	Above	F.D.	Floor Drain
AFF	Above Finish Floor	F.E.	Fire Extinguisher
BBP	Blocking Between Purlins	F.O.	Framed Opening
B.O.S.	Bottom Of Splashboard	FT	Feet
BRG	Bearing	GA	Gage, Gauge
B.S.	Both Sides	GTE	Grade To Eave
℄	Centerline	GTH	Grade To Heel
CFT	Cubic Foot	GTP	Grade To Peak
C.H.	Ceiling Height	GV	Galvanized
CLOS	Closet	IN.	Inch
COM	Common	PL	Property Line
CMU	Concrete Masonry Unit	PSF	Pounds per Square Foot
d	Penny	PSI	Pounds per Square Inch
DBL	Double	P.T.	Pressure Treated
Ea.	Each	R.C.	Raised Chord
E.E.	Each End	R.O.	Rough Opening
E.F.	Each Face	R.P.	Straight Chord
E.W.	Each Way	STP	Steel Transfer Plate
LAM	Laminated	T&G	Tongue & Groove
L.A.V.	Lavatory	T.O.G.	Top of Ledger
MIL	Millimeter(s)	T.O.W.	Top of Wall
NBW	Not By Walters Buildings	T.O.C.	Top of Concrete
N.T.S.	Not To Scale	T.O.F.	Top of Floor
O.C.	On Center(s)	TYP	Typical(ly)
O.C.E.W.	On Center Each Way	TRTD	Treated
OHD	Overhead Door	WH	Water Heater
O/O	Out to Out	WWM	Welded Wire Mesh

Walters Buildings

Jack Walters & Sons, Corp.
P.O. Box 388
6600 Midland Ct.
Allenton, WI 53002
1-800-558-7800
www.waltersbuildings.com

PROJECT NAME & LOCATION

OWNER NAME:
JOHN FISCHER

PROJECT ADDRESS:
2525 AVIATION DRIVE
WAUKESHA, WI 53188
WAUKESHA COUNTY

PROJECT LOAD SUMMARY

International Building Code 2021	
RISK CATEGORY II	
SNOW	
Pf=0.7*Ce*Ct*I*Pg	
Ps= CS*Pf	
Ground Snow Load (Pg) :	30 PSF
Snow Exposure Factor (Ce) :	1.00
Thermal Factor (Ct) :	1.20
Importance Factor (I) :	1.00
Flat Roof Snow Load (Pf) :	25.2 PSF
Slope Factor (Cs) :	1.00
Sloped Roof Snow Load (Ps) :	25.2 PSF
Unbalanced Snow Load per SPS 362.1608 :	28.2 PSF
Balanced Snow Load Used :	26 PSF
WIND	
Ultimate Wind Speed :	115 mph
Nominal Wind Speed Conversion Factor :	√(0.6)
Nominal Wind Speed :	89.1 mph
Exposure Category :	C
Qz = 0.00256*Kz*Kzt*Kd*(V^2)	
P = Qz[(GCpf)-(GCpi)]	
Kzt :	1.00
Kz :	0.96
Kd :	0.85
Qz (Velocity Pressure) :	16.5 PSF
Gcpi :	+0.18 / -0.18
WIND LOAD USED (P) :	16.5 PSF
MWFRS h<= 60ft	
SEISMIC	
Ss (Mapped Spectral Response Acceleration 0.2 Sec) :	0.076 g
S1 (Mapped Spectral Response Acceleration 1.0 Sec):	0.048 g
Sds :	0.0811
SD1 :	0.0768
Seismic Importance Factor :	1.00
Seismic Design Category :	B
Site Class :	D
Basic Structural & Seismic Resisting System = Light Framed Walls w/ Shear Panels	
Seismic Base Shear :	801 #
Cs (Seismic Response Coefficient) :	0.012
R (Response Modification Factor) :	7
Using Equivalent Lateral Force Procedure	
SOILS	
Presumed Soil Bearing Capacity :	2000 PSF
Presumed Lateral Soil Pressure :	200 PSF
Roof Live Load (reducible)	20 PSF
Total Load :	26 PSF

PROJECT CODE SUMMARY

CONSTRUCTION TYPE :	VB
Risk Category :	II
Use Group Classification :	S-1
NON-SPRINKLERED	
Tabular Allowable Area :	9000 sq ft
Frontage Increase :	0
Total Allowable Area :	9000 sq ft
Allowable Height :	40 ft
Allowable Stories :	1
Proposed Building Area:	3840 sq ft
OCCUPANT LOAD	
Aircraft Hangar = 3840 / 500gross = 7.68	
TOTAL OCCUPANT LOAD = 8	

SHEET INDEX

G1	GENERAL SPECIFICATIONS
A1-A1.3	ELEVATIONS
A2	FLOOR PLAN
S0	CONCRETE PLAN
S0.1	CONCRETE DETAILS
S1	COLUMN PLAN
S2	FRAMING PLAN
S2.1	JOIST PLAN
S3-S5	SECTIONS
D1	CONSTRUCTION DETAILS
T1	TRUSS DETAILS
SP	BUILDING LOCATION PLAN

WISCONSIN
CAYNEN KLESSIG
E-48628
VALDERS
WI
PROFESSIONAL ENGINEER
Caynen Klessig
9/25/26

NOTE:
GROUP III HANGAR

NOTE:
Heating equipment that is suspended at least 10 feet above the upper surface of wings or engine enclosures of the highest aircraft which may be housed in the hangar; or at least 8 feet above the floor in shops, offices, and other sections of the hangar communicating with storage or service areas or separated by 2-hour fire barriers.

Walters Buildings
Jack Walters & Sons, Corp.
P.O. Box 388
6600 Midland Ct.
Allenton, WI 53002
1-800-558-7800
www.waltersbuildings.com

OWNER NAME:
JOHN FISCHER

OWNER ADDRESS:
2525 AVIATION DRIVE
WAUKESHA, WI 53188
WAUKESHA COUNTY

PROJECT NAME:
60x64 AIRPLANE HANGAR #1

PROJECT ADDRESS:
2525 AVIATION DRIVE
WAUKESHA, WI 53188
WAUKESHA COUNTY

SALES REP / DEALER:
MARSHALL WISTH

DRAFTER:
ADAM CRAPSER

ESTIMATOR:
CHARLES SMITH

LAST SAVED BY:
ACRAPSER ON: 2/24/2026

PAPER SIZE:
ARCH FULL BLEED C (18.00 X 24.00 INCHES)

SCALE:

ENGINEER:
CAYNEN KLESSIG

JOB NUMBER:
95-2132

SHEET NUMBER:
G1

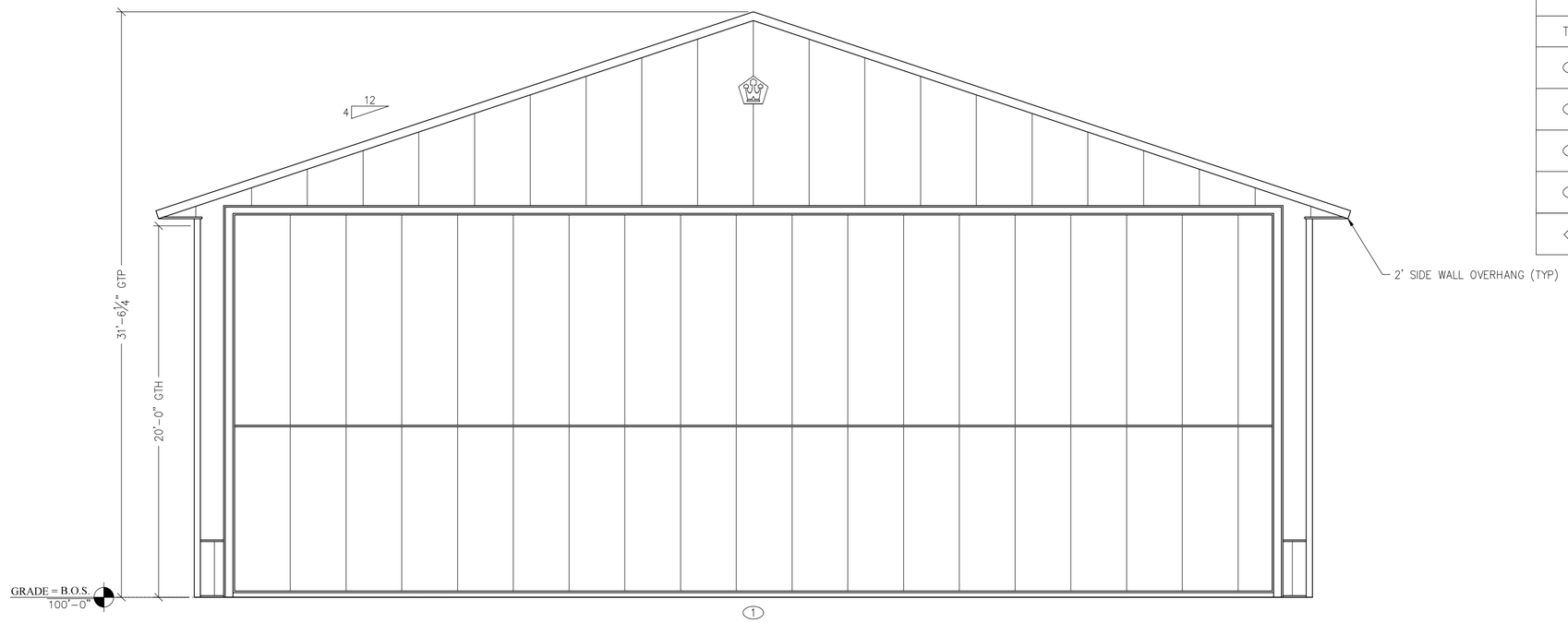

1 A1 SOUTH END ELEVATION
SCALE: 3/16" = 1'-0"

DOOR & WINDOW SCHEDULE

MAINTAIN LEVEL APPROACH TO ALL WALKDOORS *FIELD VERIFY ALL WINDOW SILL HEIGHTS*
SEE PAGE G1 FOR PLYCO ROUGH OPENING SIZES

TAG	TYPE	QUANTITY
1	56'x18' SCHWEISS BI-FOLD DOOR U=0.35	1
2	12'-0"x12'-0" CLOPAY OVERHEAD DOOR w/3' HIGH LIFT U=0.17	1
3	3068 THERMAL BREAK PLYCO 92 TB ALUMINUM FRAME SERIES w/CLOSER U=0.24	2
4	3068 INTERIOR WALKDOOR	1
A	7'-0"x2'-0" FIXED WINDOW U=0.29	6

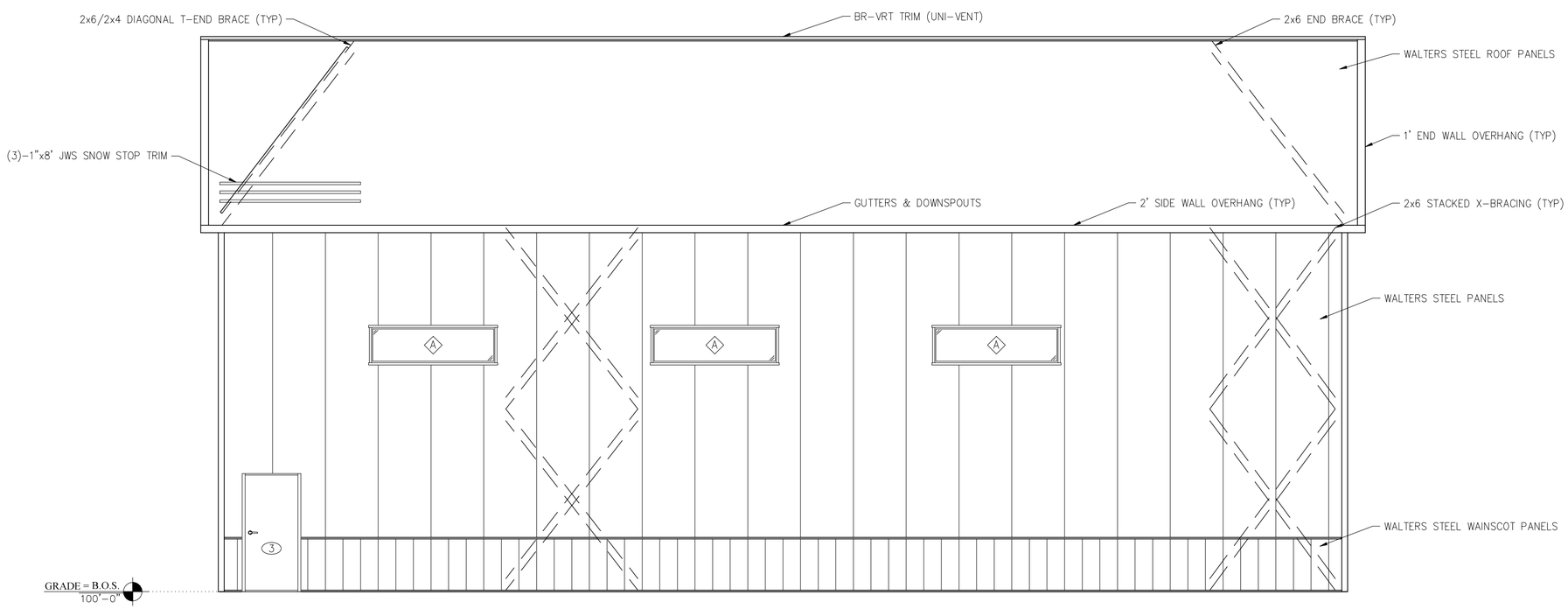

2 A1 EAST SIDE ELEVATION
SCALE: 3/16" = 1'-0"

Walters Buildings
Jack Walters & Sons, Corp.
P.O. Box 388
6600 Midland Ct.
Allenton, WI 53002
1-800-558-7800
www.waltersbuildings.com

OWNER NAME:
JOHN FISCHER

OWNER ADDRESS:
2525 AVIATION DRIVE
WAUKESHA, WI 53188
WAUKESHA COUNTY

PROJECT NAME:
60x64 AIRPLANE HANGAR #1

PROJECT ADDRESS:
2525 AVIATION DRIVE
WAUKESHA, WI 53188
WAUKESHA COUNTY

SALES REP / DEALER:
MARSHALL WISTH

DRAFTER:
ADAM CRAPSER

ESTIMATOR:
CHARLES SMITH

LAST SAVED BY:
ACRAPSER ON: 2/24/2026

PAPER SIZE:
ARCH FULL BLEED C (18.00 X 24.00 INCHES)

SCALE: 3/16" = 1'-0"
0 5 7'

ENGINEER:
CAYNEN KLESSIG

JOB NUMBER:
95-2132

SHEET NUMBER:
A1

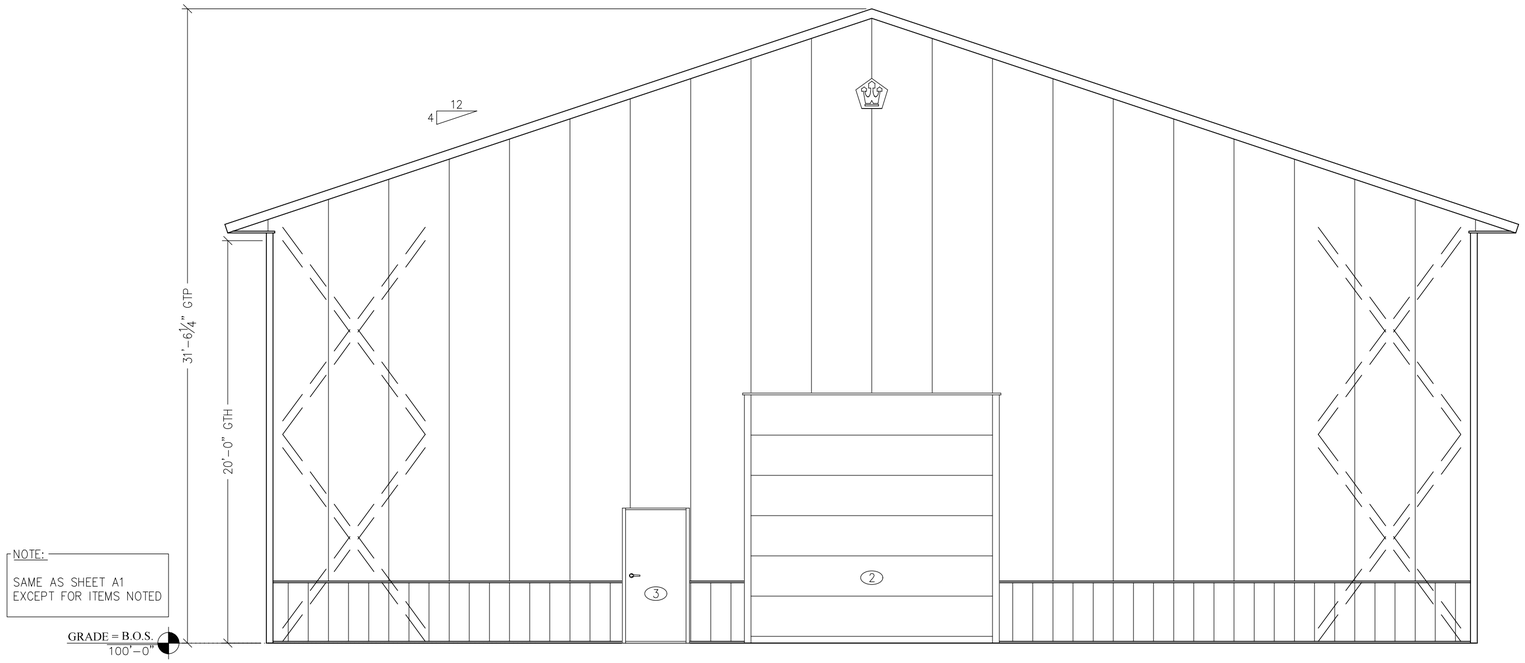

NOTE:
SAME AS SHEET A1
EXCEPT FOR ITEMS NOTED

1 A1.1 NORTH END ELEVATION
SCALE: 3/16" = 1'-0"

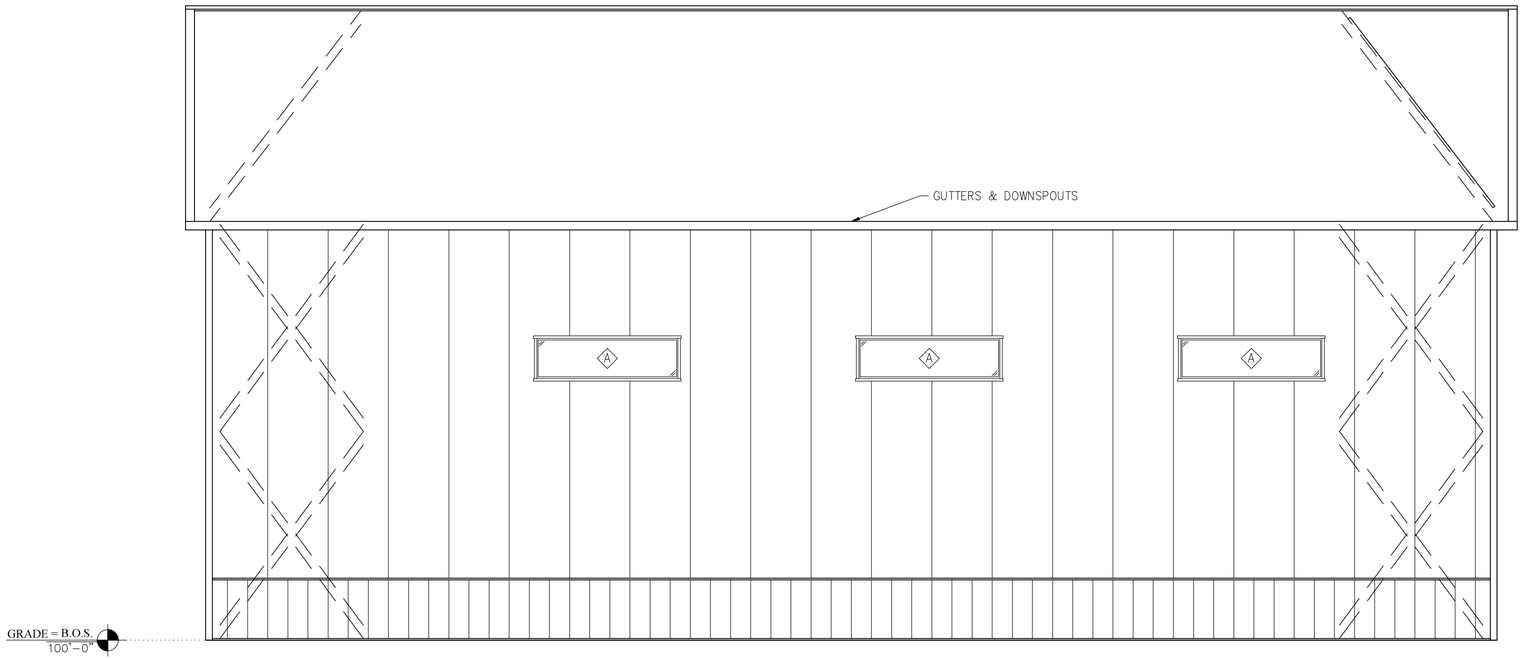

2 A1.1 WEST SIDE ELEVATION
SCALE: 3/16" = 1'-0"

DOOR & WINDOW SCHEDULE

MAINTAIN LEVEL APPROACH TO ALL WALKDOORS *FIELD VERIFY ALL WINDOW SILL HEIGHTS*
SEE PAGE G1 FOR PLYCO ROUGH OPENING SIZES

TAG	TYPE	QUANTITY
1	56'x18' SCHWEISS BI-FOLD DOOR U=0.35	1
2	12'-0"x12'-0" CLOPAY OVERHEAD DOOR w/3' HIGH LIFT U=0.17	1
3	3068 THERMAL BREAK PLYCO 92 TB ALUMINUM FRAME SERIES w/CLOSER U=0.24	2
4	3068 INTERIOR WALKDOOR	1
A	7'-0"x2'-0" FIXED WINDOW U=0.29	6

Walters Buildings
Jack Walters & Sons, Corp.
P.O. Box 388
6600 Midland Ct.
Allenton, WI 53002
1-800-558-7800
www.waltersbuildings.com

OWNER NAME:
JOHN FISCHER

OWNER ADDRESS:
2525 AVIATION DRIVE
WAUKESHA, WI 53188
WAUKESHA COUNTY

PROJECT NAME:
60x64 AIRPLANE HANGAR #1

PROJECT ADDRESS:
2525 AVIATION DRIVE
WAUKESHA, WI 53188
WAUKESHA COUNTY

SALES REP / DEALER:
MARSHALL WISTH

DRAFTER:
ADAM CRAPSER

ESTIMATOR:
CHARLES SMITH

LAST SAVED BY:
ACRAPSER ON: 2/24/2026

PAPER SIZE:
ARCH FULL BLEED C (18.00 X 24.00 INCHES)

SCALE: 3/16" = 1'-0"
0 5 7'

ENGINEER:
CAYNEN KLESSIG

JOB NUMBER:
95-2132

SHEET NUMBER:
A1.1

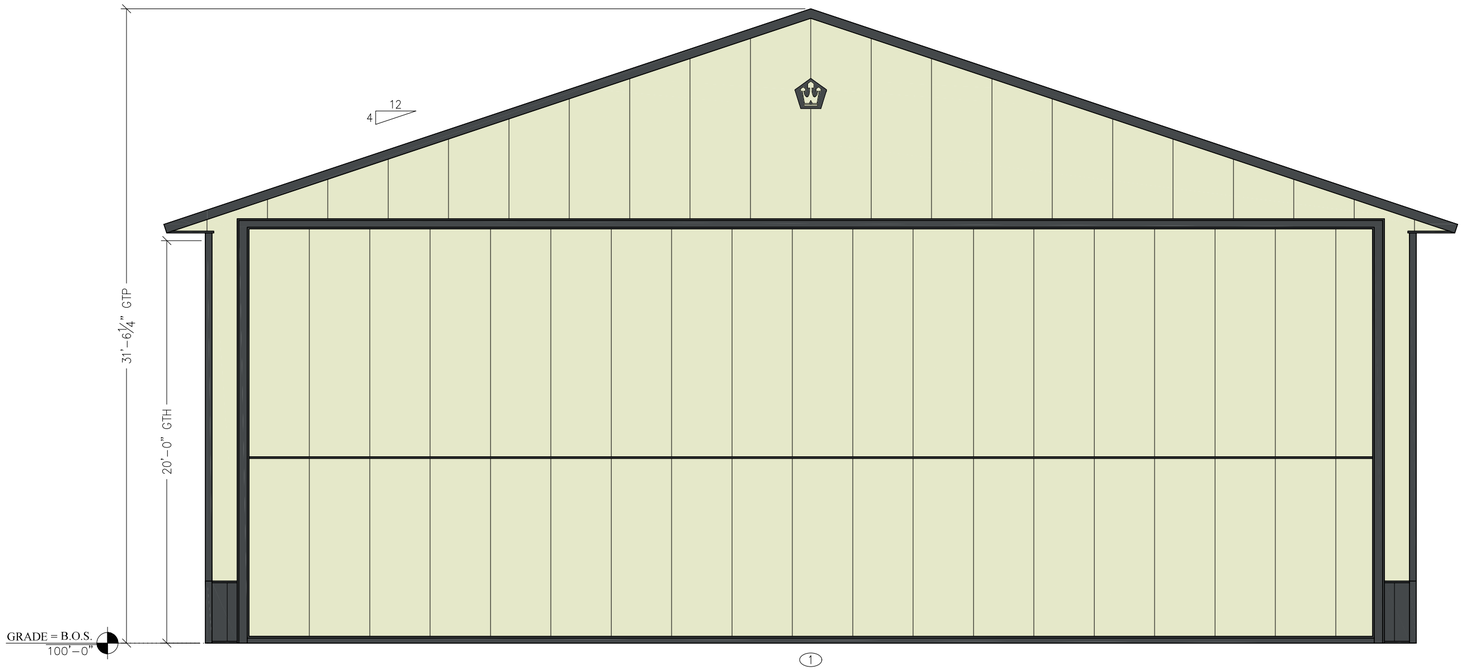

1 A1 SOUTH END ELEVATION
SCALE: 3/16" = 1'-0"

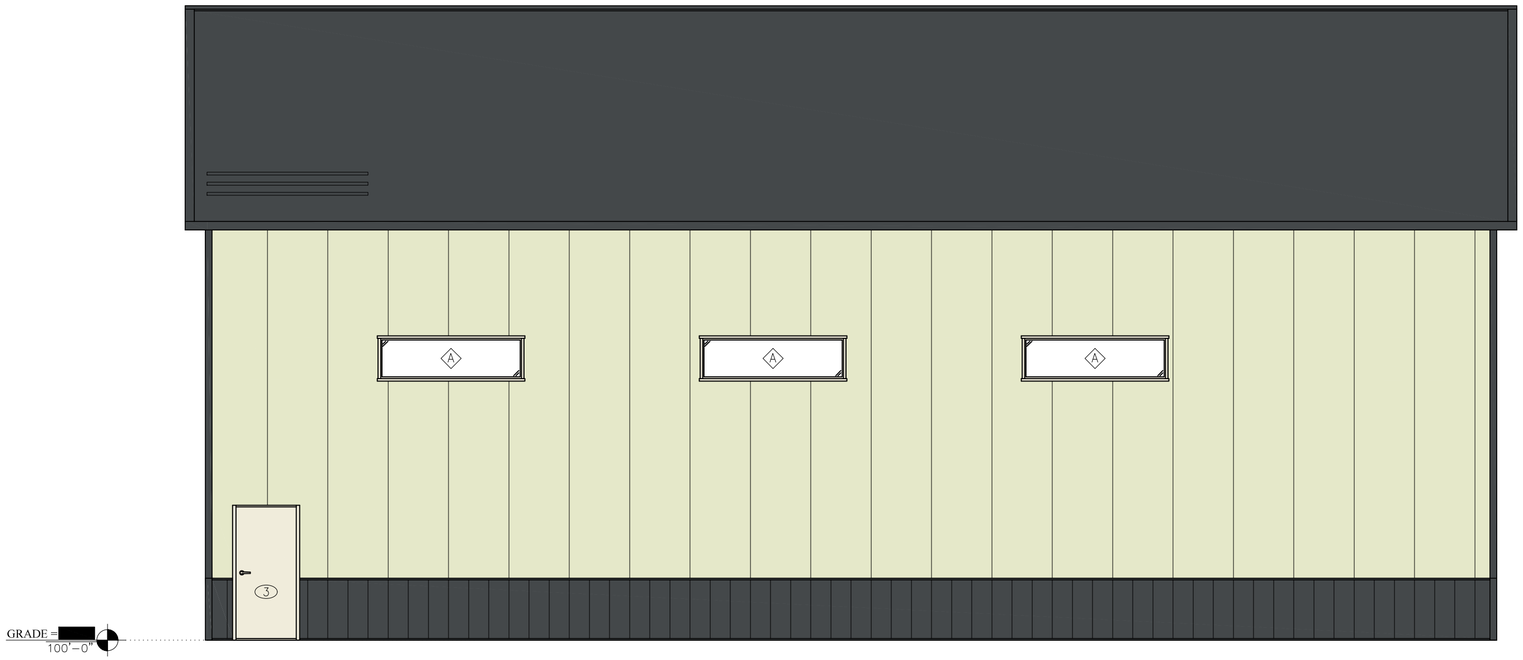

2 A1 EAST SIDE ELEVATION
SCALE: 3/16" = 1'-0"

DOOR & WINDOW SCHEDULE

MAINTAIN LEVEL APPROACH TO ALL WALKDOORS *FIELD VERIFY ALL WINDOW SILL HEIGHTS*
SEE PAGE G1 FOR PLYCO ROUGH OPENING SIZES

TAG	TYPE	QUANTITY
1	56'x18' SCHWEISS BI-FOLD DOOR U=0.35	1
2	12'-0"x12'-0" CLOPAY OVERHEAD DOOR w/3' HIGH LIFT U=0.17	1
3	3068 THERMAL BREAK PLYCO 92 TB ALUMINUM FRAME SERIES w/CLOSER U=0.24	2
4	3068 INTERIOR WALKDOOR	1
A	7'-0"x2'-0" FIXED WINDOW U=0.29	6

Walters Buildings
Jack Walters & Sons, Corp.
P.O. Box 388
6600 Midland Ct.
Allenton, WI 53002
1-800-558-7800
www.waltersbuildings.com

OWNER NAME:
JOHN FISCHER

OWNER ADDRESS:
2525 AVIATION DRIVE
WAUKESHA, WI 53188
WAUKESHA COUNTY

PROJECT NAME:
60x64 AIRPLANE HANGAR #1

PROJECT ADDRESS:
2525 AVIATION DRIVE
WAUKESHA, WI 53188
WAUKESHA COUNTY

SALES REP / DEALER:
MARSHALL WISTH

DRAFTER:
ADAM CRAPSER

ESTIMATOR:
CHARLES SMITH

LAST SAVED BY:
ACRAPSER ON: 2/24/2026

PAPER SIZE:
ARCH FULL BLEED C (18.00 X 24.00 INCHES)

SCALE: 3/16" = 1'-0"
0 5 7'

ENGINEER:
CAYNEN KLESSIG

JOB NUMBER:
95-2132

SHEET NUMBER:
A1.2

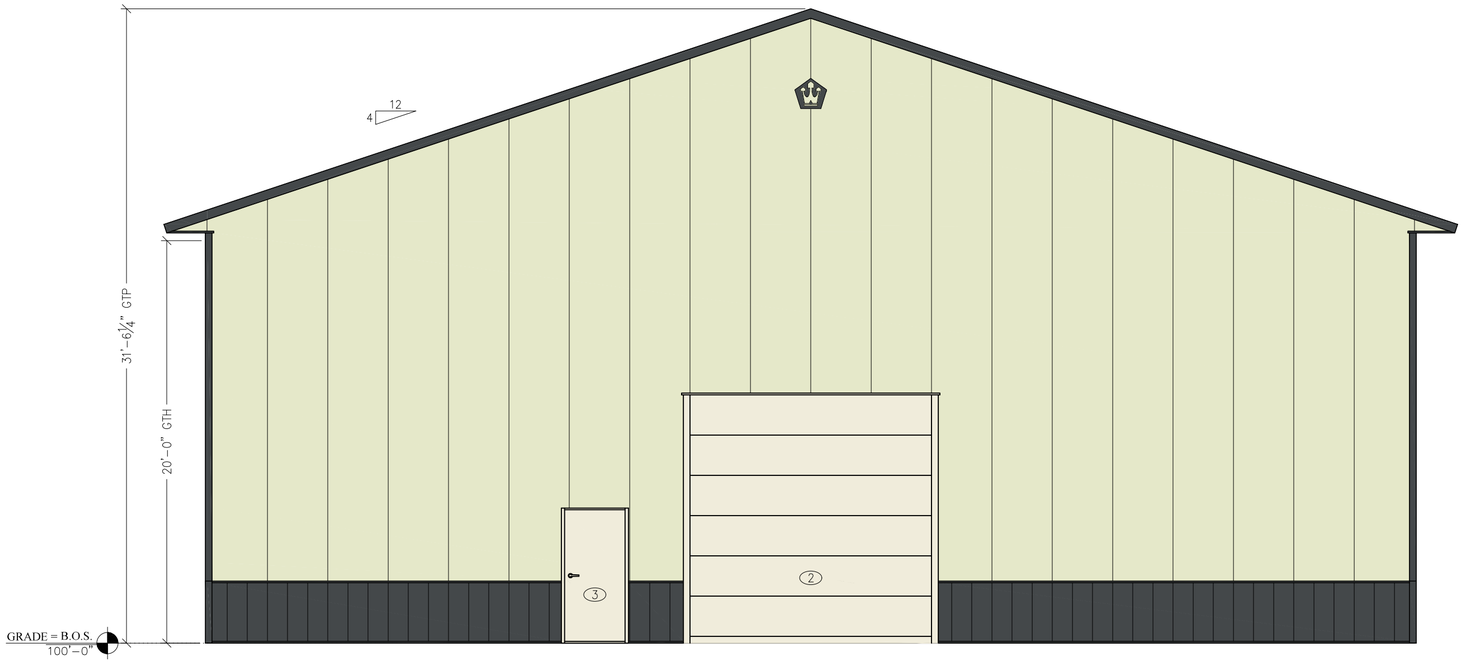

1 NORTH END ELEVATION
A1.1 SCALE: 3/16" = 1'-0"

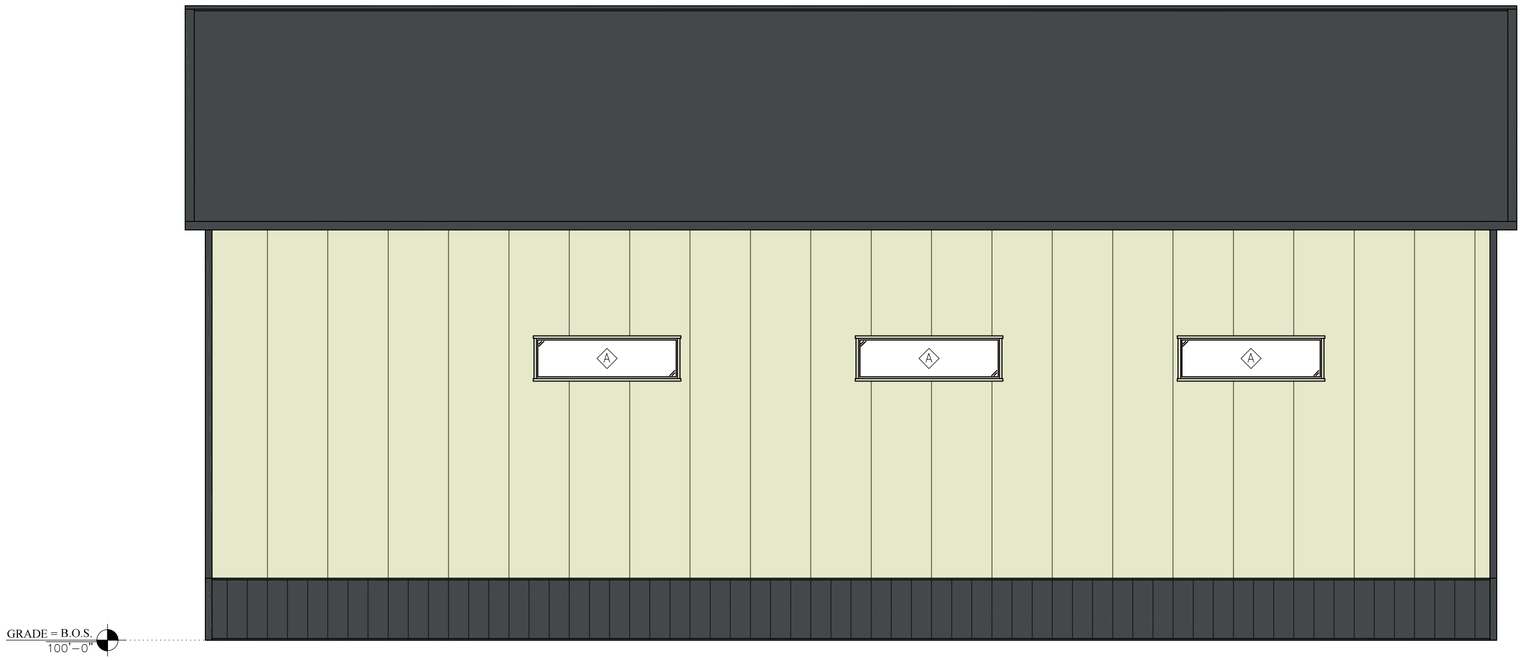

2 WEST SIDE ELEVATION
A1.1 SCALE: 3/16" = 1'-0"

DOOR & WINDOW SCHEDULE

MAINTAIN LEVEL APPROACH TO ALL WALKDOORS *FIELD VERIFY ALL WINDOW SILL HEIGHTS*
SEE PAGE G1 FOR PLYCO ROUGH OPENING SIZES

TAG	TYPE	QUANTITY
1	56'x18' SCHWEISS BI-FOLD DOOR U=0.35	1
2	12'-0"x12'-0" CLOPAY OVERHEAD DOOR w/3' HIGH LIFT U=0.17	1
3	3068 THERMAL BREAK PLYCO 92 TB ALUMINUM FRAME SERIES w/CLOSER U=0.24	2
4	3068 INTERIOR WALKDOOR	1
A	7'-0"x2'-0" FIXED WINDOW U=0.29	6

Walters Buildings
Jack Walters & Sons, Corp.
P.O. Box 388
6600 Midland Ct.
Allenton, WI 53002
1-800-558-7800
www.waltersbuildings.com

OWNER NAME:
JOHN FISCHER

OWNER ADDRESS:
2525 AVIATION DRIVE
WAUKESHA, WI 53188
WAUKESHA COUNTY

PROJECT NAME:
60x64 AIRPLANE HANGAR #1

PROJECT ADDRESS:
2525 AVIATION DRIVE
WAUKESHA, WI 53188
WAUKESHA COUNTY

SALES REP / DEALER:
MARSHALL WISTH

DRAFTER:
ADAM CRAPSER

ESTIMATOR:
CHARLES SMITH

LAST SAVED BY:
ACRAPSER ON: 2/24/2026

PAPER SIZE:
ARCH FULL BLEED C (18.00 X 24.00 INCHES)

SCALE: 3/16" = 1'-0"
0 5 7

ENGINEER:
CAYNEN KLESSIG

JOB NUMBER:
95-2132

SHEET NUMBER:
A1.3

WALK DOOR SPECIFICATIONS

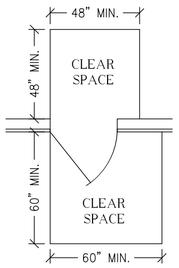

MAINTAIN LEVEL APPROACH TO WALKDOORS

SLOPES NOT GREATER THAN 1:48 WITH A MAXIMUM RISE OF 30"
DOORWAYS MAINTAIN 32" CLEAR
HALLWAYS MAINTAIN 36" CLEAR

36" EXIT DOORS SHALL MAINTAIN 32"x80" CLEAR AT ALL TIMES.
LEVER HANDLE LOCKSET DOOR HARDWARE NO MORE THAN 42" FROM FINISHED FLOOR.
MAXIMUM THRESHOLD HEIGHT 1/2", BEVEL WITH A SLOPE NO GREATER THAN 1:2

(E) EXIT SPECIFICATIONS

EXITS TO PROVIDE AN APPROVED TYPE ILLUMINATED SIGN BEARING THE WORD "EXIT" IN 6" HIGH LETTERS ABOVE ALL DOORS SHOWN THUS (E). ALL EXIT DOORS SHALL BE EQUIPPED WITH STANDARD TYPE EXIT HARDWARE OPERABLE FROM THE INSIDE WITHOUT THE USE OF LATCH, KEY OR BOLT. ALL EXIT DOORS ARE ON ACCESSIBLE ROUTE.

EXIT LIGHTS TO PROVIDE NO LESS THAN FIVE FOOTCANDLES OF ILLUMINATION WITH A CONTRAST RATIO NOT LESS THAN 0.5. SHALL BE ILLUMINATED AT ALL TIMES THE BUILDING IS OCCUPIED AND CONNECTED TO AN EMERGENCY ELECTRICAL SYSTEM THAT PROVIDES ILLUMINATION FOR A PERIOD OF NO LESS THAN 90 MINUTES AFTER POWER LOSS.

MEANS OF EGRESS LIGHTING THE INTENSITY OF FLOOR LIGHTING SHALL NOT BE LESS THAN ONE FOOT CANDLE OF ILLUMINATION AT THE WALKING SURFACE LEVEL.

FIRE EXTINGUISHER SPECIFICATIONS

OWNER TO FURNISH AND INSTALL FIRE EXTINGUISHERS PER NFPA NO. 10

NFPA TABLE 3-2.1

Hazard Occupancy	Light (Low)	Ordinary (Moderate)	Extra (High)
Minimum Rated Single Extinguisher	2-A	2-A	4-A*
Maximum Floor Area per Unit of A	3,000 sq. ft.	1,500 sq. ft.	1,000 sq. ft.
Maximum Floor Area per Extinguisher	11,250 sp. ft.	11,250 sq. ft.	11,250 sq. ft.
Maximum Travel Distance to Extinguisher	75 ft.	75 ft.	75 ft.

* Two 2 1/2 Gallon Water Type Extinguishers can be used to fulfill the requirements of One 4-A Rated Extinguisher.

DOOR & WINDOW SCHEDULE

MAINTAIN LEVEL APPROACH TO ALL WALKDOORS *FIELD VERIFY ALL WINDOW SILL HEIGHTS*
SEE PAGE G1 FOR PLYCO ROUGH OPENING SIZES

TAG	TYPE	QUANTITY
1	56'x18' SCHWEISS BI-FOLD DOOR U=0.35	1
2	12'-0"x12'-0" CLOPAY OVERHEAD DOOR w/3' HIGH LIFT U=0.17	1
3	3068 THERMAL BREAK PLYCO 92 TB ALUMINUM FRAME SERIES w/CLOSER U=0.24	2
4	3068 INTERIOR WALKDOOR	1
A	7'-0"x2'-0" FIXED WINDOW U=0.29	6

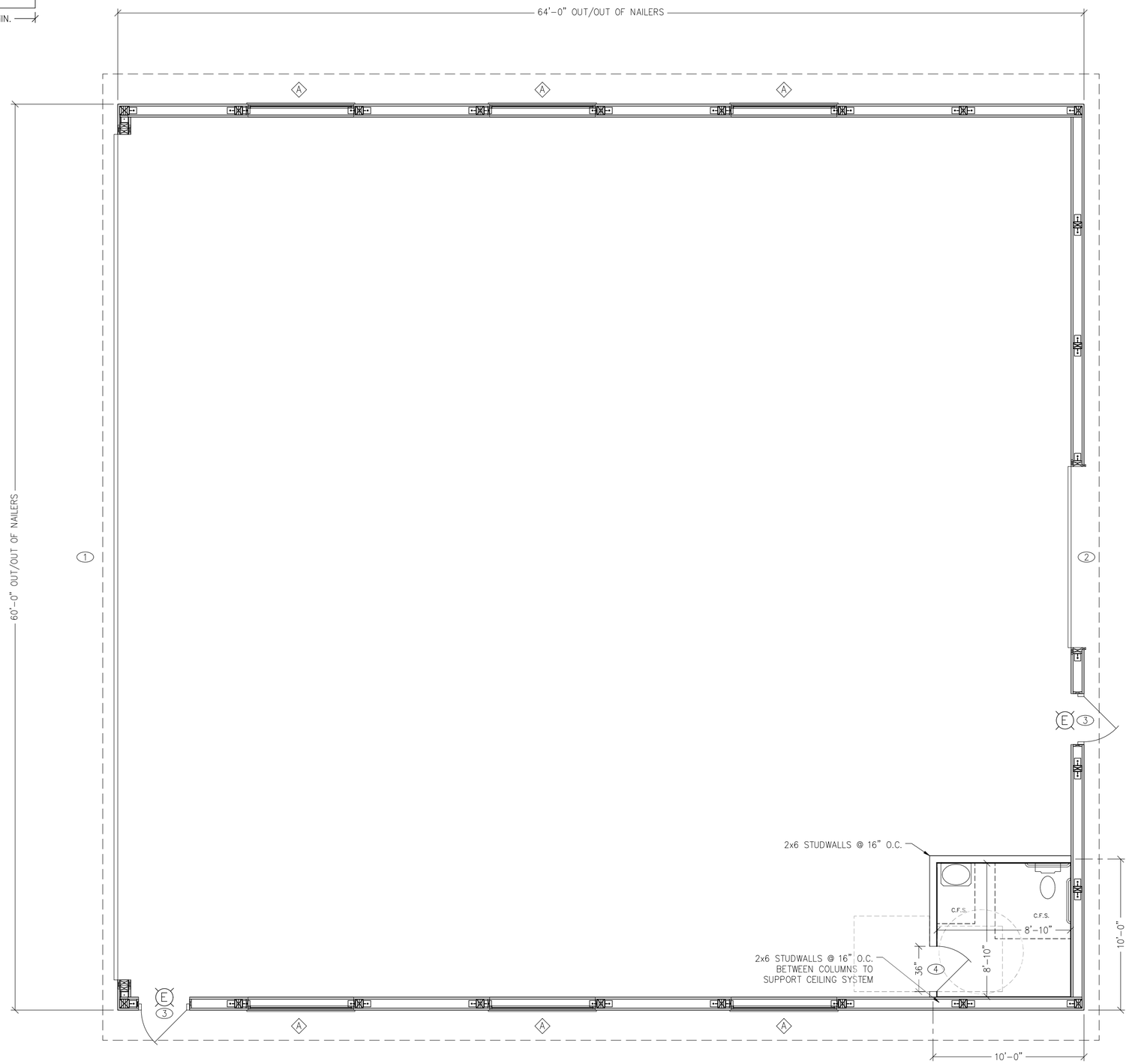

1 A2 FLOOR LAYOUT PLAN
SCALE: 3/16" = 1'-0"

Walters Buildings
Jack Walters & Sons, Corp.
P.O. Box 388
6600 Midland Ct.
Allenton, WI 53002
1-800-558-7800
www.waltersbuildings.com

OWNER NAME:
JOHN FISCHER

OWNER ADDRESS:
2525 AVIATION DRIVE
WAUKESHA, WI 53188
WAUKESHA COUNTY

PROJECT NAME:
60x64 AIRPLANE HANGAR #1

PROJECT ADDRESS:
2525 AVIATION DRIVE
WAUKESHA, WI 53188
WAUKESHA COUNTY

SALES REP / DEALER:
MARSHALL WISTH

DRAFTER:
ADAM CRAPSER

ESTIMATOR:
CHARLES SMITH

LAST SAVED BY:
ACRAPSER ON: 2/24/2026

PAPER SIZE:
ARCH FULL BLEED C (18.00 X 24.00 INCHES)

SCALE: 3/16" = 1'-0"
0 5' 7'

ENGINEER:
CAYNEN KLESSIG

JOB NUMBER:
95-2132

SHEET NUMBER:
A2

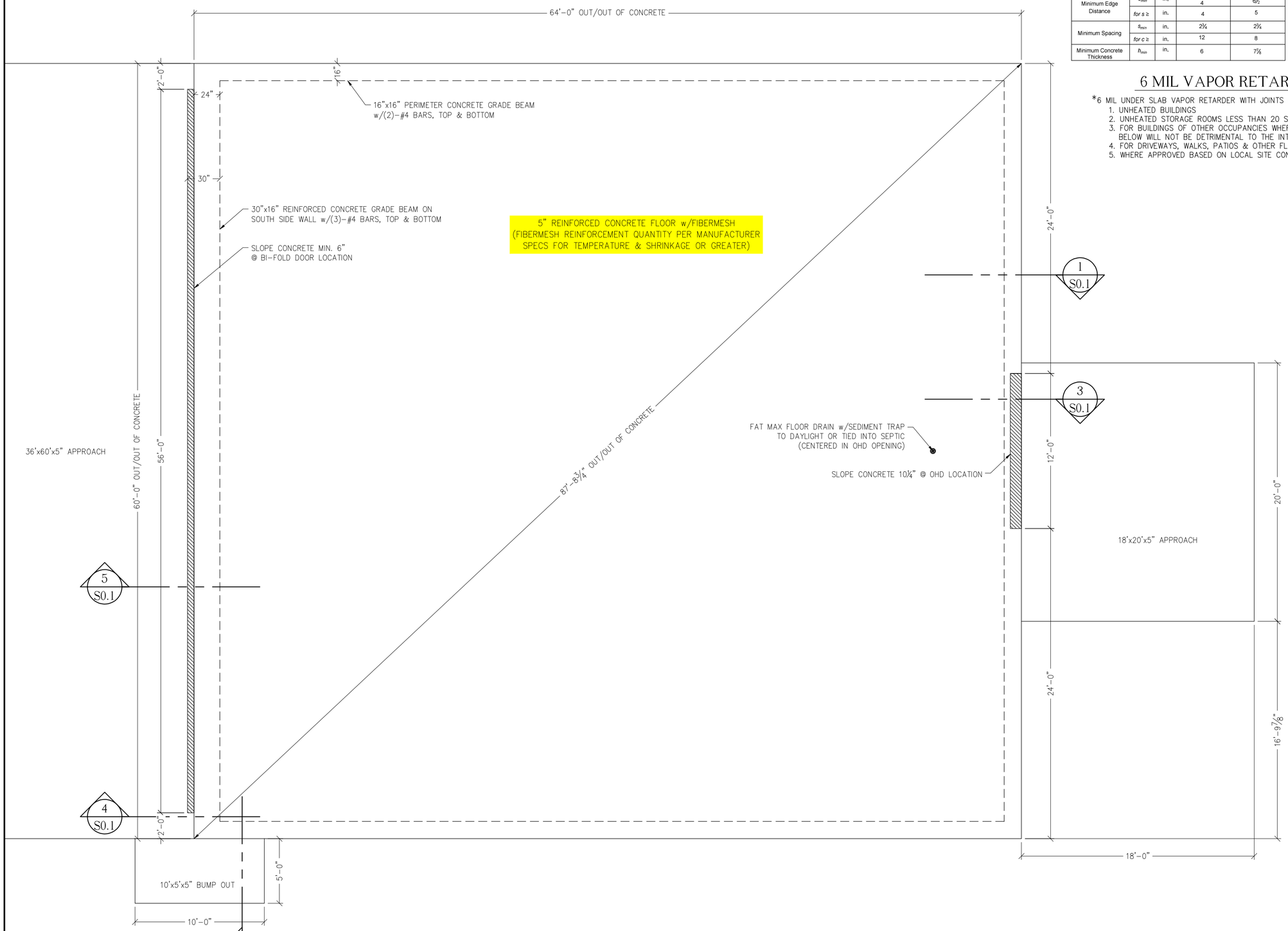

1 S0 CONCRETE PLAN
SCALE: 3/16" = 1'-0"

STRONG-BOLT 2 SPECIFICATIONS

CARBON STEEL STRONG-BOLT® 2 ANCHOR INSTALLATION INFORMATION[1]

CHARACTERISTIC	SYMBOL	UNITS	NOMINAL ANCHOR DIAMETER CARBON STEEL	
			½ inch[6]	⅝ inch[6]
Installation Information				
Nominal Diameter	d_a	in.	½	⅝
Drill Bit Diameter	d	in.	½	⅝
Baseplate Clearance Hole Diameter[2]	d_c	in.	9/16	11/16
Installation Torque	T_{inst}	ft-lbf	60	90
Nominal Embedment Depth	h_{nom}	in.	3⅜	5⅛
Effective Embedment Depth	h_{ef}	in.	3⅜	4½
Minimum Hole Depth	h_{hole}	in.	4⅛	5⅝
Minimum Overall Anchor Length	ℓ_{anch}	in.	5½	6
Critical Edge Distance	c_{ac}	in.	7½	9
Minimum Edge Distance	c_{min}	in.	4	6½
	for $s \geq$	in.	4	5
Minimum Spacing	s_{min}	in.	2¾	2¾
	for $c \geq$	in.	12	8
Minimum Concrete Thickness	h_{min}	in.	6	7⅞

Additional Data

CHARACTERISTIC	SYMBOL	UNITS	NOMINAL ANCHOR DIAMETER CARBON STEEL	
			½ inch[6]	⅝ inch[6]
Additional Data				
Specified Yield Strength	f_{ya}	psi	85,000	
Specified Tensile Strength	f_{uta}	psi	115,000	
Minimum Tensile and Shear Stress Area	A_{se}	in^2	0.105	0.166
Axial Stiffness in Service Load Range - Cracked and Uncracked Concrete[3]	β	lb/in	63,570	91,370

1. The information presented in this table is to be used in conjunction with the design criteria of ACI 318-19 Chapter 17, ACI 318-14 Chapter 17 or ACI 318-11 Appendix D, as applicable.
2. The clearance must comply with applicable code requirements for the connected element.
3. The tabulated value of β for 1/4-inch-diameter carbon steel Strong-Bolt® 2 anchor is for installations in uncracked concrete only.
4. The 1/4-inch-diameter (6.4 mm) anchor may be installed in top of uncracked normal-weight and sand-lightweight concrete over profile steel deck where concrete thickness above upper flute meets the minimum thicknesses specified in this table.
5. The 3/8-inch- through 1-inch-diameter (9.5 mm through 25.4 mm) anchors may be installed in topside of cracked and uncracked normal-weight and sand-lightweight concrete over profile steel deck where concrete thickness above upper flute meets the minimum thicknesses specified in this table, and Tables 5 for the 3/8-inch and 1/2-inch-diameter (9.5 mm and 12.7 mm) anchors.

6 MIL VAPOR RETARDER SPECIFICATIONS

*6 MIL UNDER SLAB VAPOR RETARDER WITH JOINTS LAPPED NOT LESS THAN 6" IS REQUIRED EXCEPT FOR:

1. UNHEATED BUILDINGS
2. UNHEATED STORAGE ROOMS LESS THAN 20 SQUARE FEET & CARPORTS ATTACHED TO R-3 OCCUPANCIES
3. FOR BUILDINGS OF OTHER OCCUPANCIES WHERE MIGRATION OF MOISTURE THROUGH THE SLAB FROM BELOW WILL NOT BE DETRIMENTAL TO THE INTENDED OCCUPANCY OF THE BUILDING
4. FOR DRIVEWAYS, WALKS, PATIOS & OTHER FLATWORK THAT WILL NOT BE ENCLOSED AT A LATER DATE
5. WHERE APPROVED BASED ON LOCAL SITE CONDITIONS

Walters Buildings
Jack Walters & Sons, Corp.
P.O. Box 388
6600 Midland Ct.
Allenton, WI 53002
1-800-558-7800
www.waltersbuildings.com

OWNER NAME:
JOHN FISCHER

OWNER ADDRESS:
2525 AVIATION DRIVE
WAUKESHA, WI 53188
WAUKESHA COUNTY

PROJECT NAME:
60x64 AIRPLANE HANGAR #1

PROJECT ADDRESS:
2525 AVIATION DRIVE
WAUKESHA, WI 53188
WAUKESHA COUNTY

SALES REP / DEALER:
MARSHALL WISTH

DRAFTER:
ADAM CRAPSER

ESTIMATOR:
CHARLES SMITH

LAST SAVED BY:
ACRAPSER ON: 2/24/2026

PAPER SIZE:
ARCH FULL BLEED C (18.00 X 24.00 INCHES)

SCALE: 3/16" = 1'-0"
0 3' 7'

ENGINEER:
CAYNEN KLESSIG

JOB NUMBER:
95-2132

SHEET NUMBER:
S0

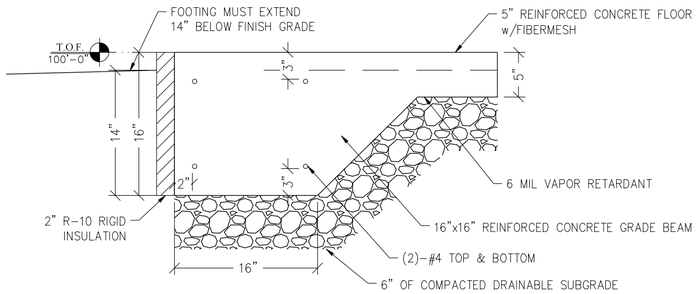

1 / S0.1 CONCRETE SECTION
SCALE: 1" = 1'-0"

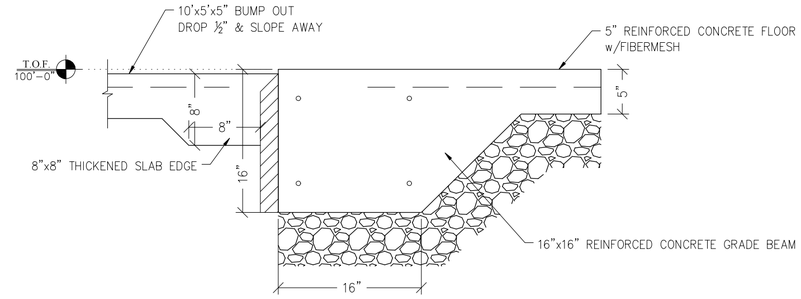

2 / S0.1 CONCRETE SECTION
SCALE: 1" = 1'-0"

NOTE:
SAME AS SECTION 1/S0.1
EXCEPT FOR ITEMS NOTED

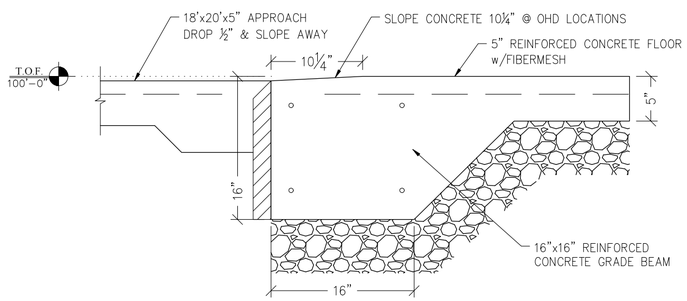

3 / S0.1 CONCRETE SECTION
SCALE: 1" = 1'-0"

NOTE:
SAME AS SECTION 2/S0.1
EXCEPT FOR ITEMS NOTED

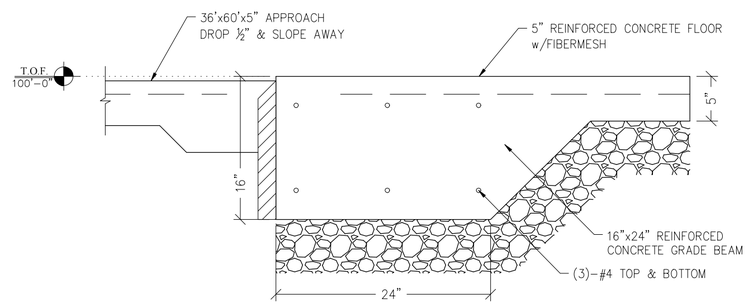

4 / S0.1 CONCRETE SECTION
SCALE: 1" = 1'-0"

NOTE:
SAME AS SECTION 1/S0.1
EXCEPT FOR ITEMS NOTED

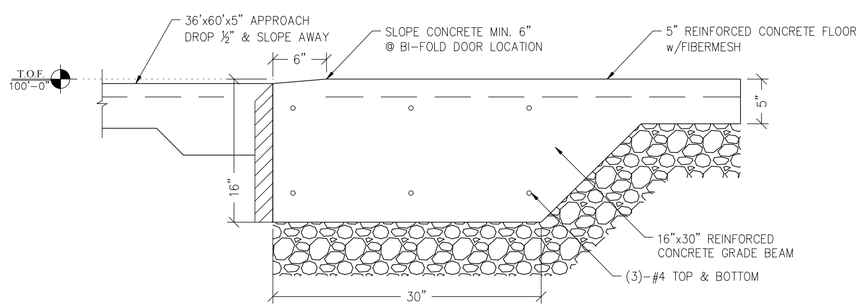

5 / S0.1 CONCRETE SECTION
SCALE: 1" = 1'-0"

NOTE:
SAME AS SECTION 4/S0.1
EXCEPT FOR ITEMS NOTED

Walters Buildings
Jack Walters & Sons, Corp.
P.O. Box 388
6600 Midland Ct.
Allenton, WI 53002
1-800-558-7800
www.waltersbuildings.com

OWNER NAME:
JOHN FISCHER

OWNER ADDRESS:
2525 AVIATION DRIVE
WAUKESHA, WI 53188
WAUKESHA COUNTY

PROJECT NAME:
60x64 AIRPLANE HANGAR #1

PROJECT ADDRESS:
2525 AVIATION DRIVE
WAUKESHA, WI 53188
WAUKESHA COUNTY

SALES REP / DEALER:
MARSHALL WISTH

DRAFTER:
ADAM CRAPSER

ESTIMATOR:
CHARLES SMITH

LAST SAVED BY:
ACRAPSER ON: 2/24/2026

PAPER SIZE:
ARCH FULL BLEED C (18.00 X 24.00 INCHES)

SCALE: 1" = 1'-0"
0 6" 1'

ENGINEER:
CAYNEN KLESSIG

JOB NUMBER:
95-2132

SHEET NUMBER:
S0.1

CENTER ALL HOLDDOWNS ON COLUMNS

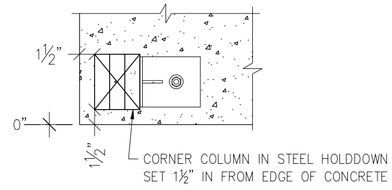

COLUMN SCHEDULE	
TAG	COLUMN TYPE
1	(3)-PLY 2x8 #1 SYP STP LAM COLUMN
2	(4)-PLY 2x8 #1 SYP STP LAM COLUMN
3	(6)-PLY 2x8 2400 MSR SYP STP LAM COLUMN w/SPECIAL 2-BOLT HOLDDOWN

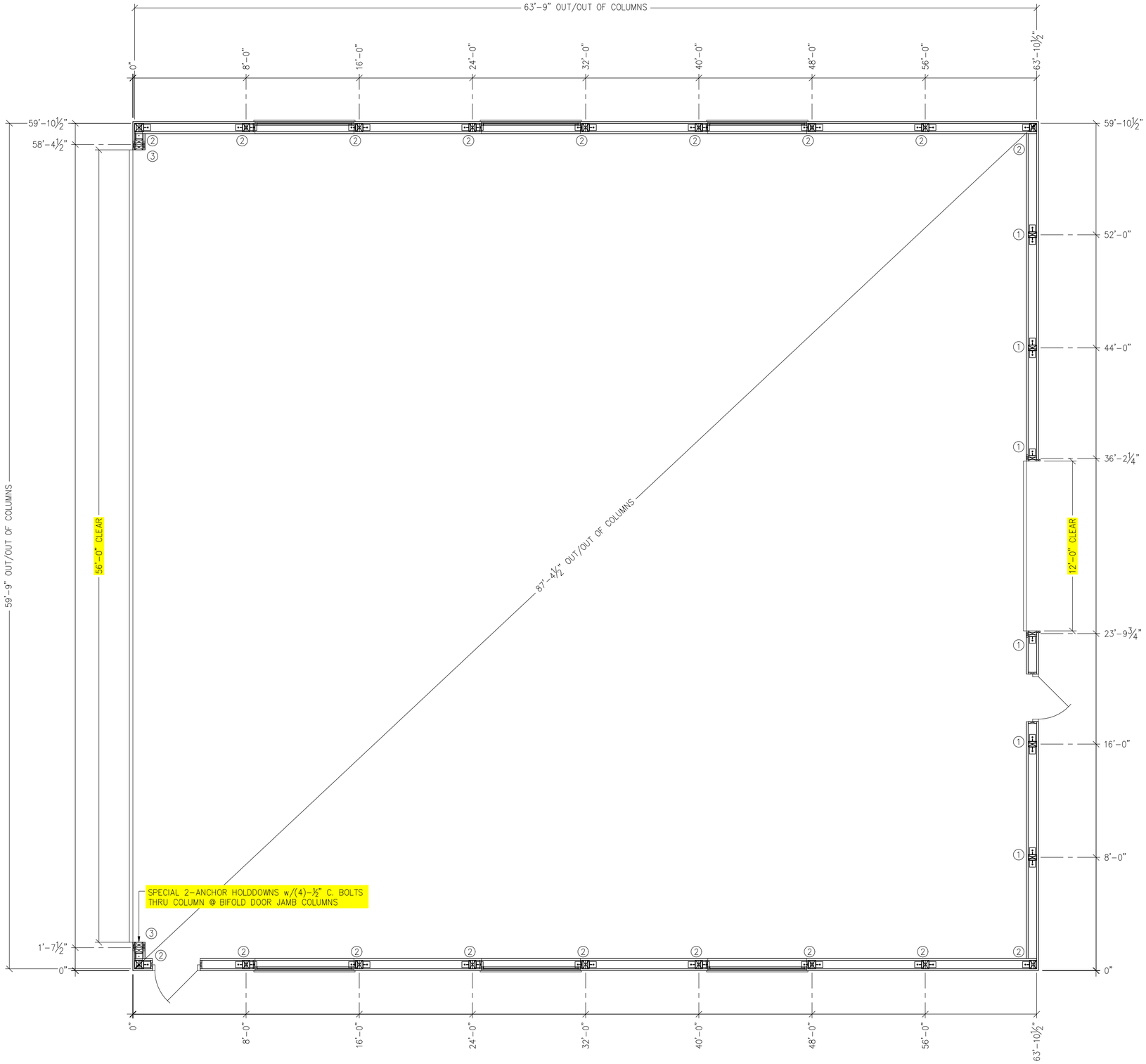

1 S1 COLUMN PLAN
SCALE: 3/16" = 1'-0"

Walters Buildings
Jack Walters & Sons, Corp.
P.O. Box 388
6600 Midland Ct.
Allenton, WI 53002
1-800-558-7800
www.waltersbuildings.com

OWNER NAME:
JOHN FISCHER

OWNER ADDRESS:
2525 AVIATION DRIVE
WAUKESHA, WI 53188
WAUKESHA COUNTY

PROJECT NAME:
60x64 AIRPLANE HANGAR #1

PROJECT ADDRESS:
2525 AVIATION DRIVE
WAUKESHA, WI 53188
WAUKESHA COUNTY

SALES REP / DEALER:
MARSHALL WISTH

DRAFTER:
ADAM CRAPSER

ESTIMATOR:
CHARLES SMITH

LAST SAVED BY:
ACRAPSER ON: 2/24/2026

PAPER SIZE:
ARCH FULL BLEED C (18.00 X 24.00 INCHES)

SCALE: 3/16" = 1'-0"
0 5 7

ENGINEER:
CAYNEN KLESSIG

JOB NUMBER:
95-2132

SHEET NUMBER:
S1

WALK DOOR SPECIFICATIONS

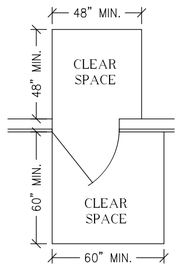

MAINTAIN LEVEL APPROACH TO WALKDOORS

SLOPES NOT GREATER THAN 1:48 WITH A MAXIMUM RISE OF 30"
DOORWAYS MAINTAIN 32" CLEAR
HALLWAYS MAINTAIN 36" CLEAR

36" EXIT DOORS SHALL MAINTAIN 32"x80" CLEAR AT ALL TIMES.
LEVER HANDLE LOCKSET DOOR HARDWARE NO MORE THAN 42" FROM FINISHED FLOOR.
MAXIMUM THRESHOLD HEIGHT 1/2", BEVEL WITH A SLOPE NO GREATER THAN 1:2

(E) EXIT SPECIFICATIONS

EXITS TO PROVIDE AN APPROVED TYPE ILLUMINATED SIGN BEARING THE WORD "EXIT" IN 6" HIGH LETTERS ABOVE ALL DOORS SHOWN THUS (E). ALL EXIT DOORS SHALL BE EQUIPPED WITH STANDARD TYPE EXIT HARDWARE OPERABLE FROM THE INSIDE WITHOUT THE USE OF LATCH, KEY OR BOLT. ALL EXIT DOORS ARE ON ACCESSIBLE ROUTE.

EXIT LIGHTS TO PROVIDE NO LESS THAN FIVE FOOTCANDLES OF ILLUMINATION WITH A CONTRAST RATIO NOT LESS THAN 0.5. SHALL BE ILLUMINATED AT ALL TIMES THE BUILDING IS OCCUPIED AND CONNECTED TO AN EMERGENCY ELECTRICAL SYSTEM THAT PROVIDES ILLUMINATION FOR A PERIOD OF NO LESS THAN 90 MINUTES AFTER POWER LOSS.

MEANS OF EGRESS LIGHTING THE INTENSITY OF FLOOR LIGHTING SHALL NOT BE LESS THAN ONE FOOT CANDLE OF ILLUMINATION AT THE WALKING SURFACE LEVEL.

FIRE EXTINGUISHER SPECIFICATIONS

OWNER TO FURNISH AND INSTALL FIRE EXTINGUISHERS PER NFPA NO. 10

NFPA TABLE 3-2.1

Hazard Occupancy	Light (Low)	Ordinary (Moderate)	Extra (High)
Minimum Rated Single Extinguisher	2-A	2-A	4-A*
Maximum Floor Area per Unit of A	3,000 sq. ft.	1,500 sq. ft.	1,000 sq. ft.
Maximum Floor Area per Extinguisher	11,250 sp. ft.	11,250 sq. ft.	11,250 sq. ft.
Maximum Travel Distance to Extinguisher	75 ft.	75 ft.	75 ft.

* Two 2 1/2 Gallon Water Type Extinguishers can be used to fulfill the requirements of One 4-A Rated Extinguisher.

DOOR & WINDOW SCHEDULE

MAINTAIN LEVEL APPROACH TO ALL WALKDOORS *FIELD VERIFY ALL WINDOW SILL HEIGHTS*
SEE PAGE G1 FOR PLYCO ROUGH OPENING SIZES

TAG	TYPE	QUANTITY
1	56'x18' SCHWEISS BI-FOLD DOOR U=0.35	1
2	12'-0"x12'-0" CLOPAY OVERHEAD DOOR w/3' HIGH LIFT U=0.17	1
3	3068 THERMAL BREAK PLYCO 92 TB ALUMINUM FRAME SERIES w/CLOSER U=0.24	2
4	3068 INTERIOR WALKDOOR	1
A	7'-0"x2'-0" FIXED WINDOW U=0.29	6

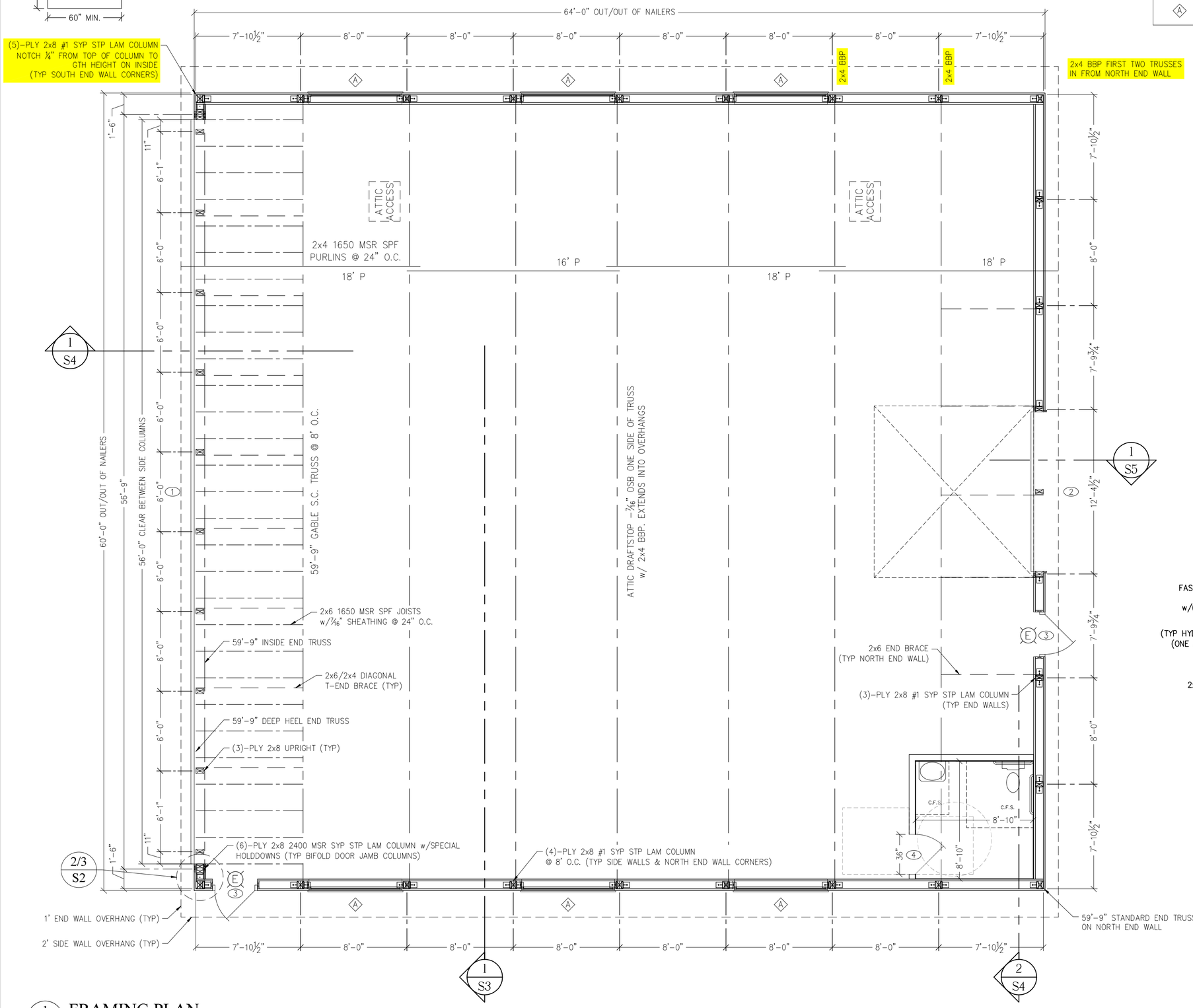

1 / S2 FRAMING PLAN
SCALE: 3/16" = 1'-0"

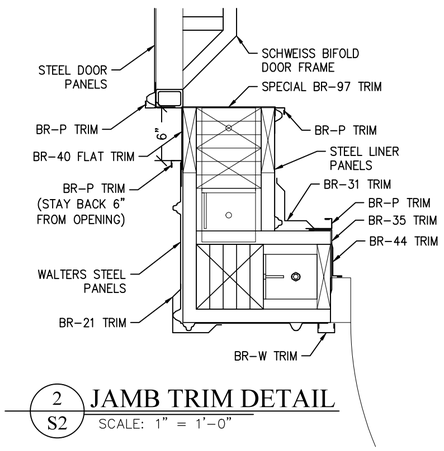

2 / S2 JAMB TRIM DETAIL
SCALE: 1" = 1'-0"

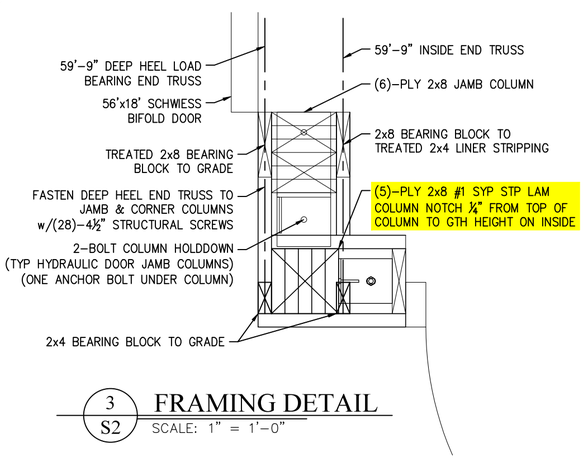

3 / S2 FRAMING DETAIL
SCALE: 1" = 1'-0"

Walters Buildings
Jack Walters & Sons, Corp.
P.O. Box 388
6600 Midland Ct.
Allenton, WI 53002
1-800-558-7800
www.waltersbuildings.com

OWNER NAME:
JOHN FISCHER

OWNER ADDRESS:
2525 AVIATION DRIVE
WAUKESHA, WI 53188
WAUKESHA COUNTY

PROJECT NAME:
60x64 AIRPLANE HANGAR #1

PROJECT ADDRESS:
2525 AVIATION DRIVE
WAUKESHA, WI 53188
WAUKESHA COUNTY

SALES REP / DEALER:
MARSHALL WISTH

DRAFTER:
ADAM CRAPSER

ESTIMATOR:
CHARLES SMITH

LAST SAVED BY:
ACRAPSER ON: 2/24/2026

PAPER SIZE:
ARCH FULL BLEED C (18.00 X 24.00 INCHES)

SCALE:
AS NOTED

ENGINEER:
CAYNEN KLESSIG

JOB NUMBER:
95-2132

SHEET NUMBER:
S2

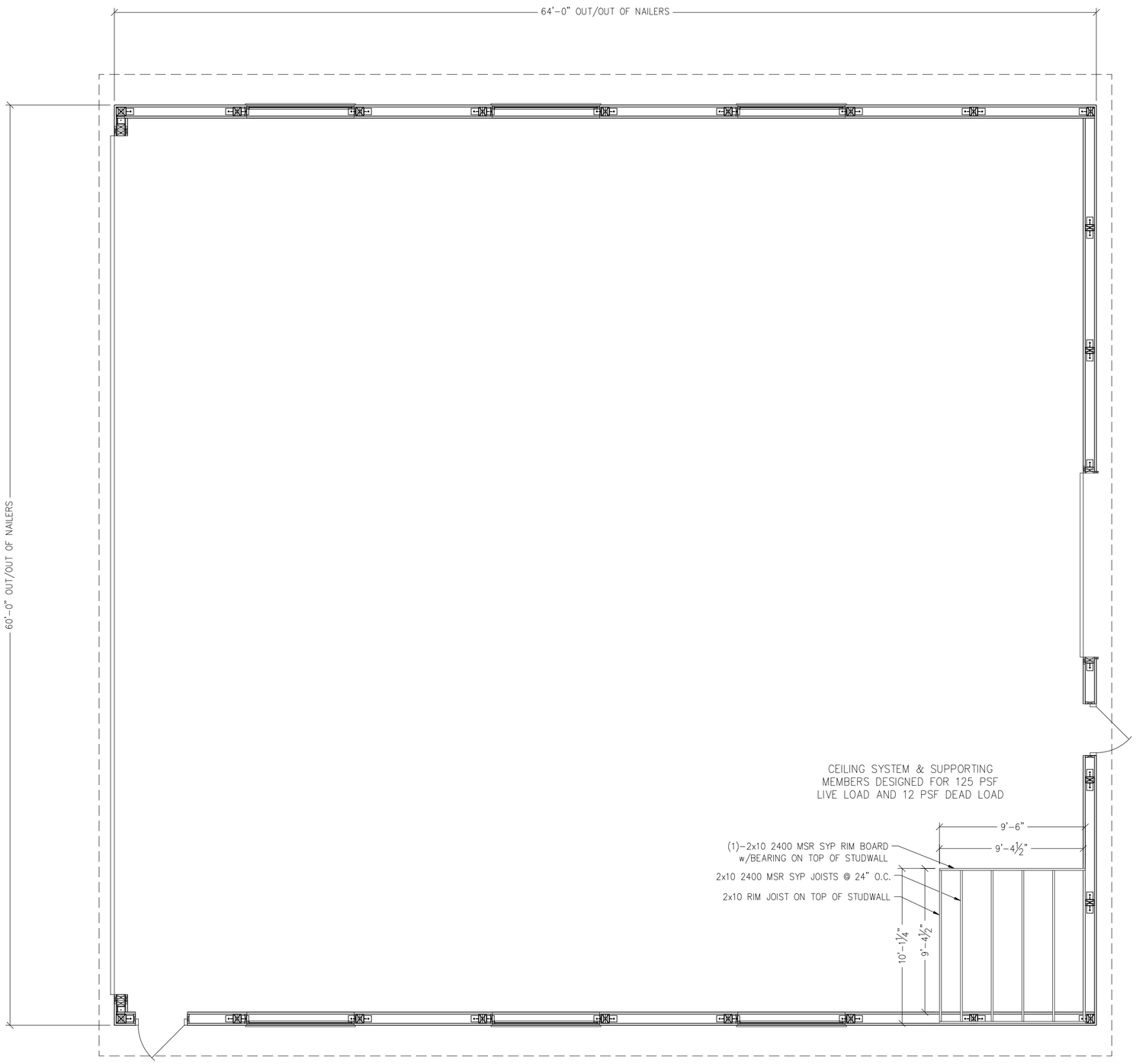

1 S2.1 JOIST LAYOUT PLAN
SCALE: 3/16" = 1'-0"

Walters Buildings
Jack Walters & Sons, Corp.
P.O. Box 388
6600 Midland Ct.
Allenton, WI 53002
1-800-558-7800
www.waltersbuildings.com

OWNER NAME:
JOHN FISCHER

OWNER ADDRESS:
2525 AVIATION DRIVE
WAUKESHA, WI 53188
WAUKESHA COUNTY

PROJECT NAME:
60x64 AIRPLANE HANGAR #1

PROJECT ADDRESS:
2525 AVIATION DRIVE
WAUKESHA, WI 53188
WAUKESHA COUNTY

SALES REP / DEALER:
MARSHALL WISTH

DRAFTER:
ADAM CRAPSER

ESTIMATOR:
CHARLES SMITH

LAST SAVED BY:
ACRAPSER ON: 2/24/2026

PAPER SIZE:
ARCH FULL BLEED C (18.00 X 24.00 INCHES)

SCALE: 3/16" = 1'-0"
0 5' 7'

ENGINEER:
CAYNEN KLESSIG

JOB NUMBER:
95-2132

SHEET NUMBER:
S2.1

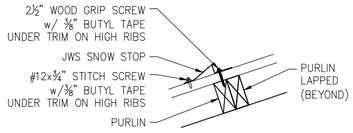

2/S3 SNOW STOP DETAIL

SCALE: 1" = 1'-0"

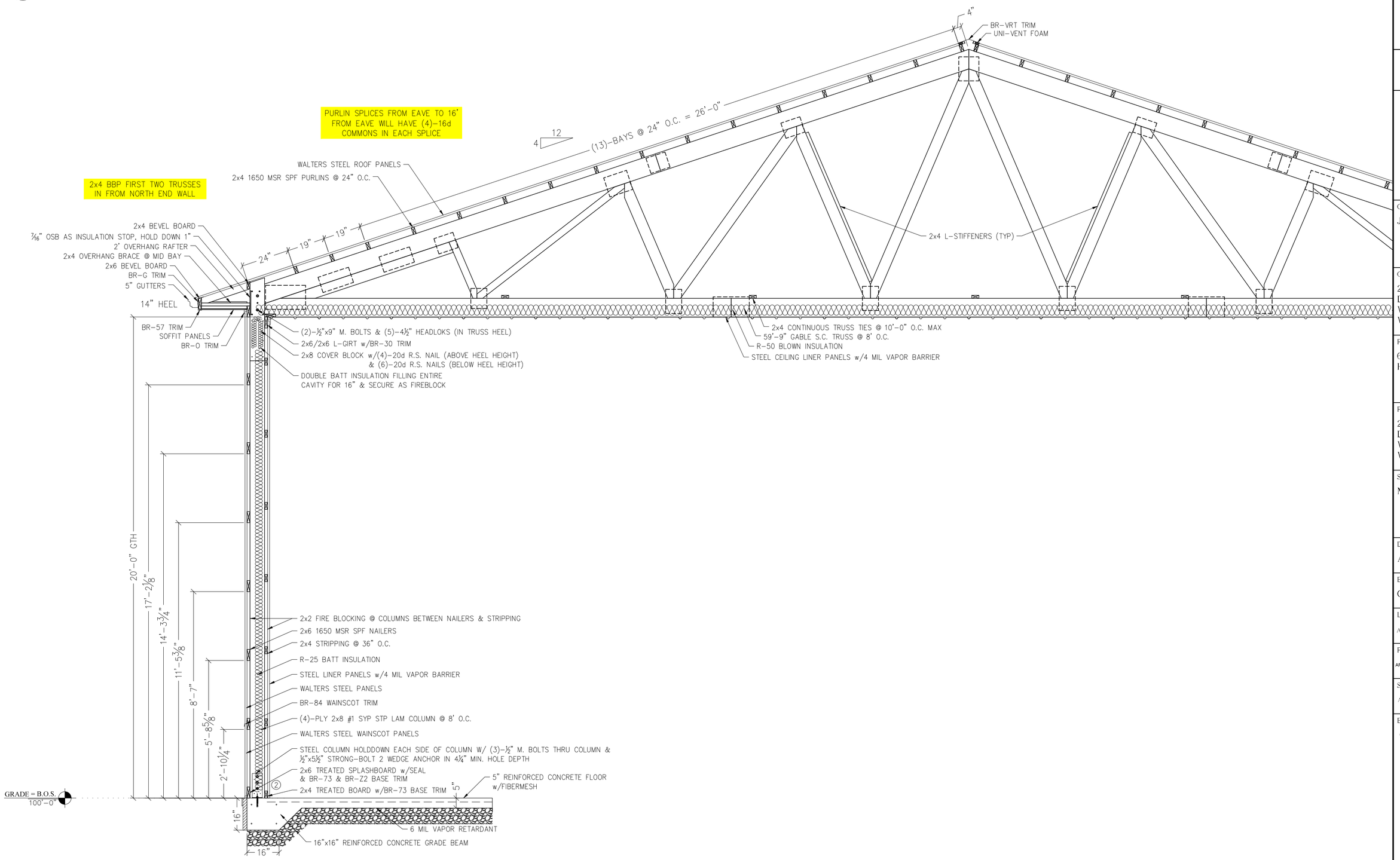

1/S3 CROSS SECTION

SCALE: 3/8" = 1'-0"

Walters Buildings

Jack Walters & Sons, Corp.
P.O. Box 388
6600 Midland Ct.
Allenton, WI 53002
1-800-558-7800
www.waltersbuildings.com

OWNER NAME:
JOHN FISCHER

OWNER ADDRESS:
2525 AVIATION DRIVE
WAUKESHA, WI 53188
WAUKESHA COUNTY

PROJECT NAME:
60x64 AIRPLANE HANGAR #1

PROJECT ADDRESS:
2525 AVIATION DRIVE
WAUKESHA, WI 53188
WAUKESHA COUNTY

SALES REP / DEALER:
MARSHALL WISTH

DRAFTER:
ADAM CRAPSER

ESTIMATOR:
CHARLES SMITH

LAST SAVED BY:
ACRAPSER ON: 2/24/2026

PAPER SIZE:
ARCH FULL BLEED C (18.00 X 24.00 INCHES)

SCALE:
AS NOTED

ENGINEER:
CAYNEN KLESSIG

JOB NUMBER:
95-2132

SHEET NUMBER:
S3

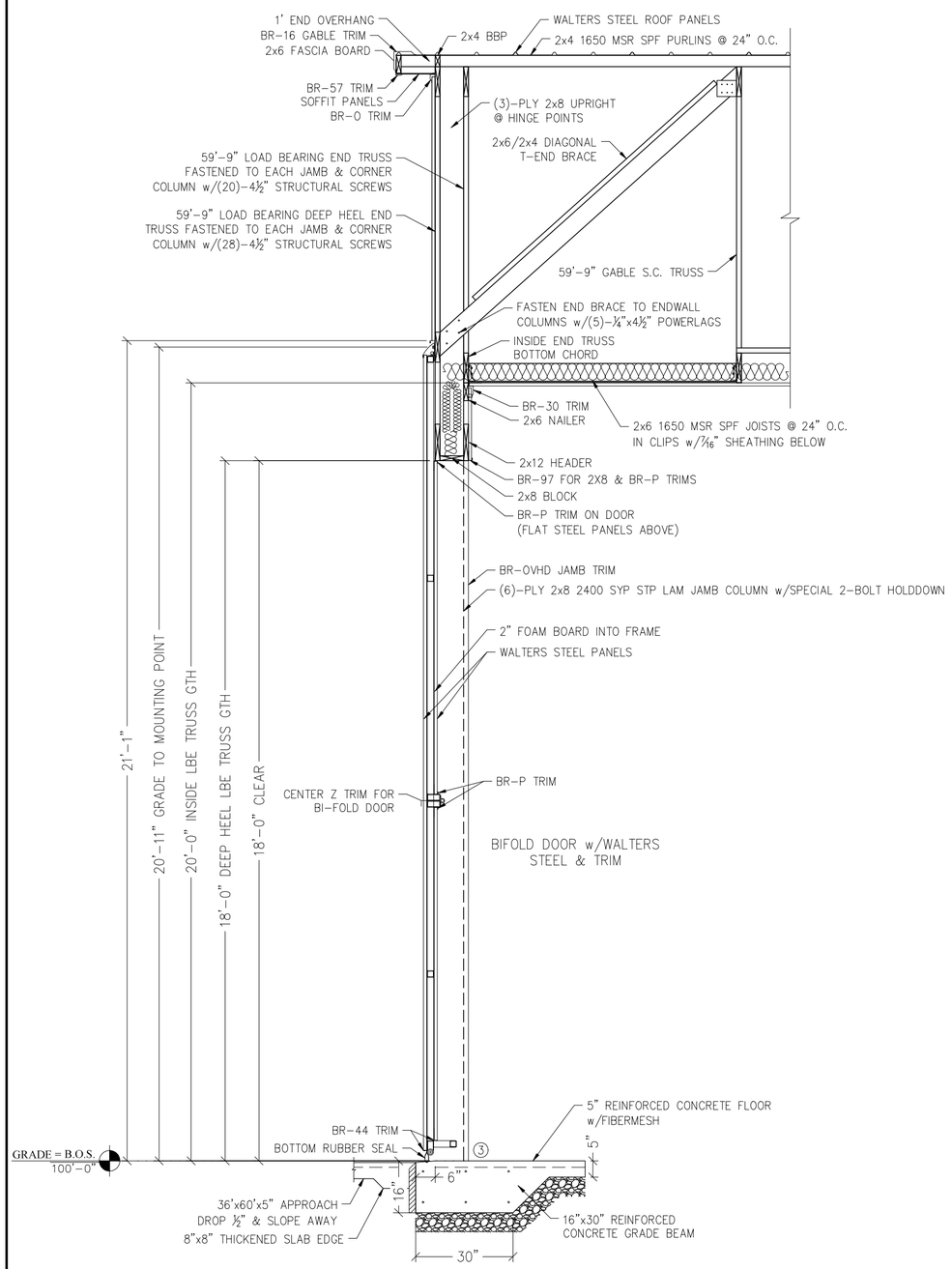

1 / S4 **BI-FOLD DOOR SECTION**
SCALE: 3/8" = 1'-0"

NOTE:
SAME AS SECTION 1/S3
EXCEPT FOR ITEMS NOTED

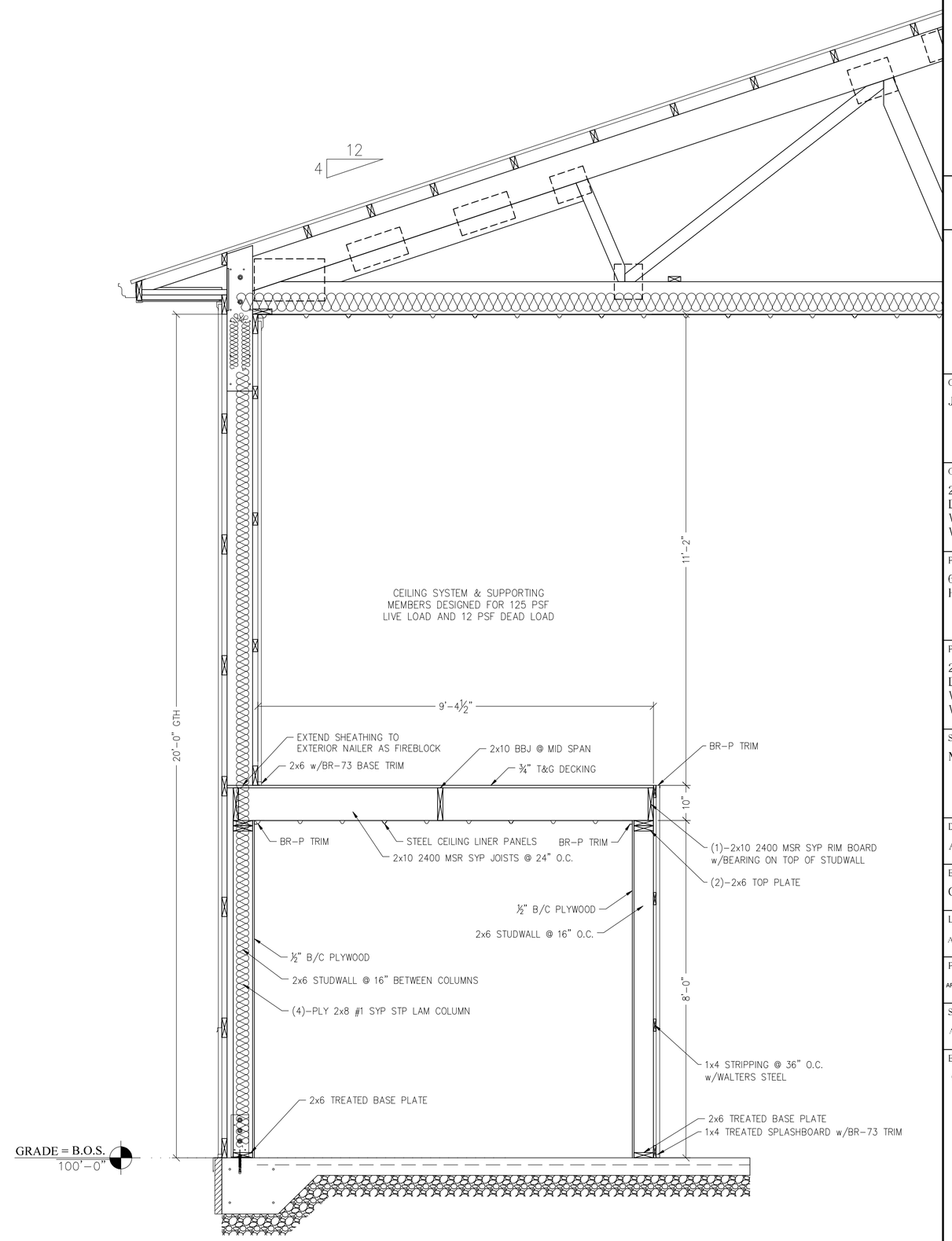

2 / S4 **CROSS SECTION**
SCALE: 1/2" = 1'-0"

NOTE:
SAME AS SECTION 1/S3
EXCEPT FOR ITEMS NOTED

Walters Buildings
Jack Walters & Sons, Corp.
P.O. Box 388
6600 Midland Ct.
Allenton, WI 53002
1-800-558-7800
www.waltersbuildings.com

OWNER NAME:
JOHN FISCHER

OWNER ADDRESS:
2525 AVIATION DRIVE
WAUKESHA, WI 53188
WAUKESHA COUNTY

PROJECT NAME:
60x64 AIRPLANE HANGAR #1

PROJECT ADDRESS:
2525 AVIATION DRIVE
WAUKESHA, WI 53188
WAUKESHA COUNTY

SALES REP / DEALER:
MARSHALL WISTH

DRAFTER:
ADAM CRAPSER

ESTIMATOR:
CHARLES SMITH

LAST SAVED BY:
ACRAPSER ON: 2/24/2026

PAPER SIZE:
ARCH FULL BLEED C (18.00 X 24.00 INCHES)

SCALE:
AS NOTED

ENGINEER:
CAYNEN KLESSIG

JOB NUMBER:
95-2132

SHEET NUMBER:
S4

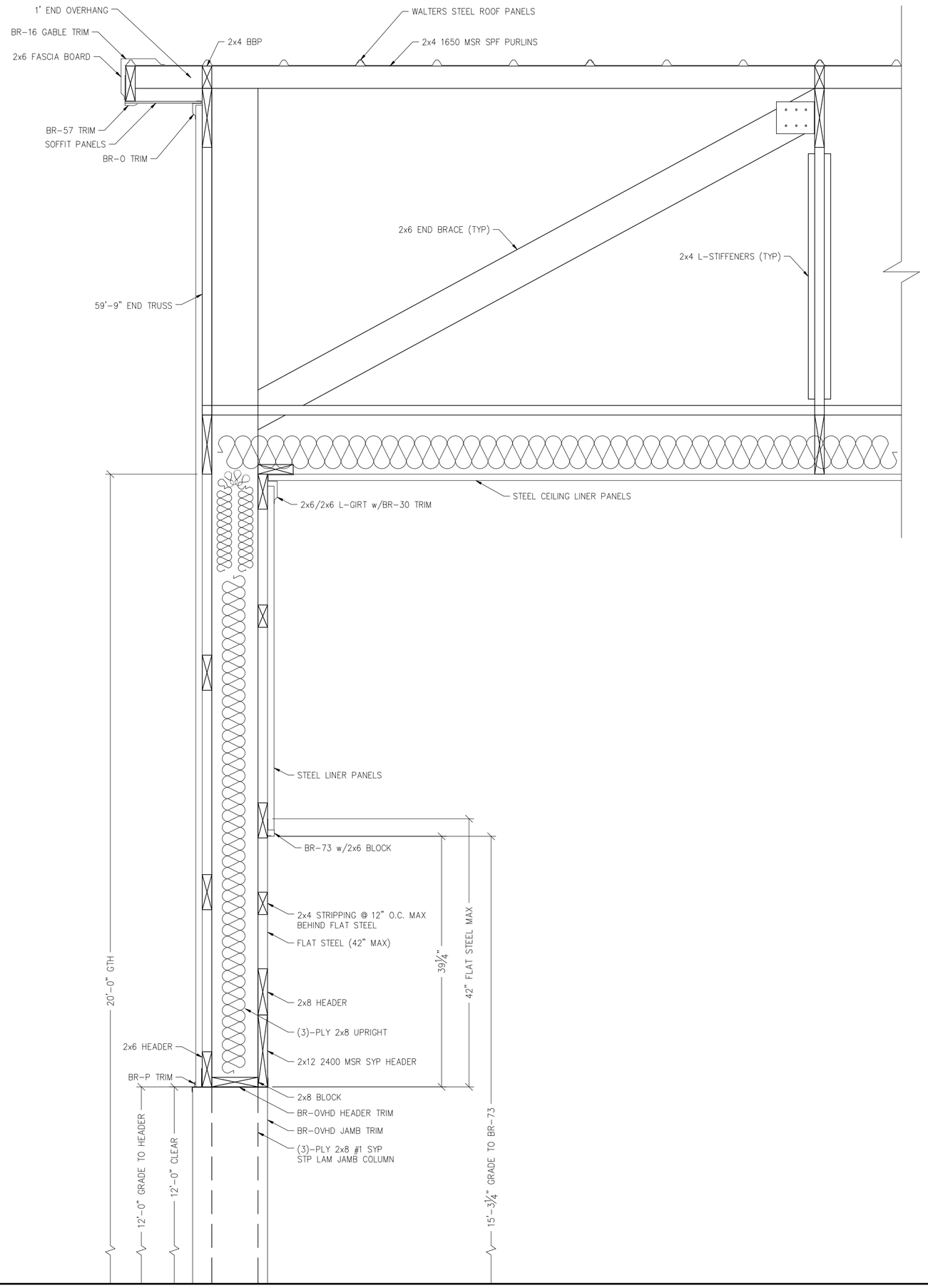

NOTE:

SAME AS SECTION 1/S3
EXCEPT FOR ITEMS NOTED

1/S5 HEADER SECTION
SCALE: 1" = 1'-0"

Walters Buildings
Jack Walters & Sons, Corp.
P.O. Box 388
6600 Midland Ct.
Allenton, WI 53002
1-800-558-7800
www.waltersbuildings.com

OWNER NAME:
JOHN FISCHER

OWNER ADDRESS:
2525 AVIATION DRIVE
WAUKESHA, WI 53188
WAUKESHA COUNTY

PROJECT NAME:
60x64 AIRPLANE HANGAR #1

PROJECT ADDRESS:
2525 AVIATION DRIVE
WAUKESHA, WI 53188
WAUKESHA COUNTY

SALES REP / DEALER:
MARSHALL WISTH

DRAFTER:
ADAM CRAPSER

ESTIMATOR:
CHARLES SMITH

LAST SAVED BY:
ACRAPSER ON: 2/24/2026

PAPER SIZE:
ARCH FULL BLEED C (18.00 X 24.00 INCHES)

SCALE: 1" = 1'-0"
0 6" 1'

ENGINEER:
CAYNEN KLESSIG

JOB NUMBER:
95-2132

SHEET NUMBER:
S5

STANDARD TRIM DETAILS

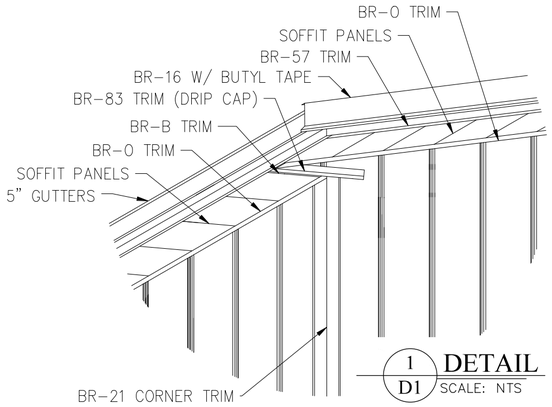

1 / D1 DETAIL
SCALE: NTS

STANDARD FRAMING DETAILS

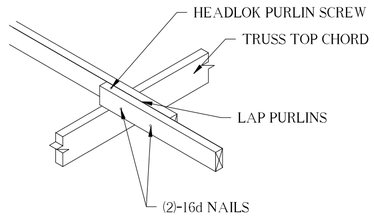

PURLIN LAP

PURLIN SPLICES FROM EAVE TO 16' FROM EAVE WILL HAVE (4)-16d COMMONS IN EACH SPLICE

2 / D1 DETAIL
SCALE: NTS

STANDARD BRACING DETAILS

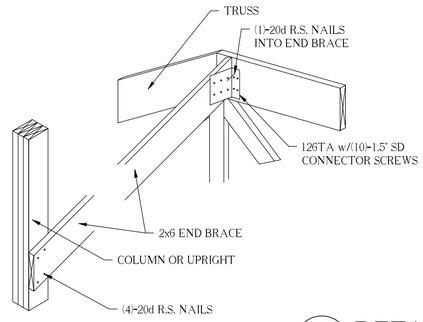

2x6 END BRACE

3 / D1 DETAIL
SCALE: NTS

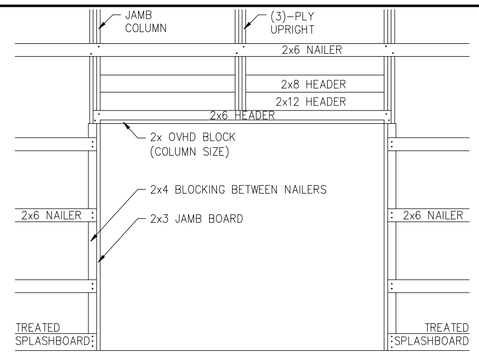

TYPICAL OHD FRAMING @ ENDWALL LOCATIONS
(If Applicable)

4 / D1 DETAIL
SCALE: NTS

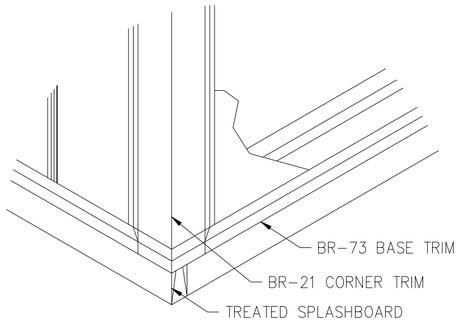

CUT NOTCH IN
BR-21 OVER BR-73

5 / D1 DETAIL
SCALE: NTS

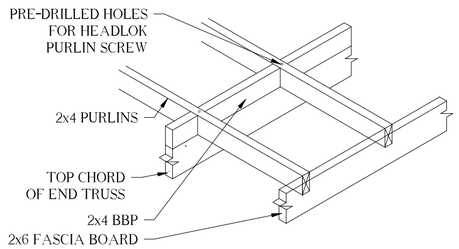

END PURLINS WITH OVERHANG

6 / D1 DETAIL
SCALE: NTS

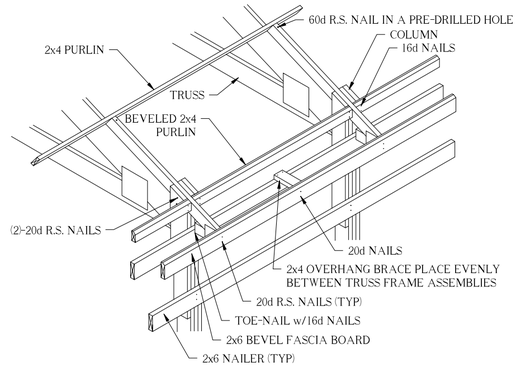

OVERHANG RAFTER FRAMING

7 / D1 DETAIL
SCALE: NTS

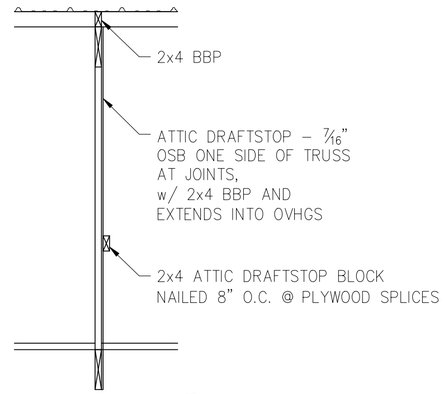

8 / D1 DETAIL
SCALE: NTS

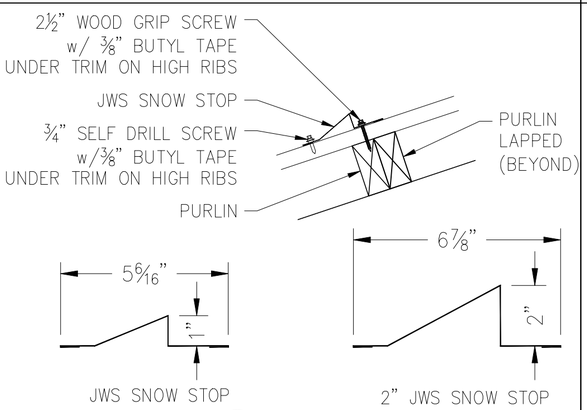

9 / D1 DETAIL
SCALE: NTS

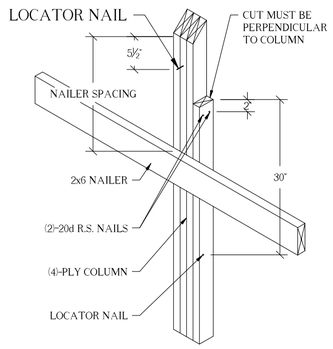

TRUSS TO COLUMN
1 PLY TRUSS – 4 PLY COLUMN

10 / D1 DETAIL
SCALE: NTS

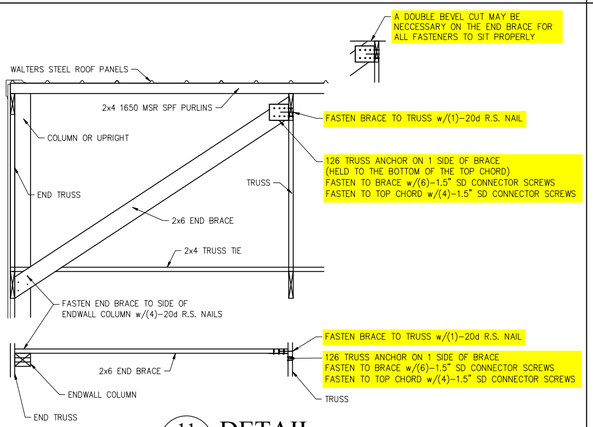

11 / D1 DETAIL
SCALE: NTS

12 / D1 DETAIL
SCALE: NTS

ADDITIONAL DETAILS

13 / D1 DETAIL
SCALE: NTS

14 / D1 DETAIL
SCALE: NTS

15 / D1 DETAIL
SCALE: NTS

16 / D1 DETAIL
SCALE: NTS

Walters Buildings
Jack Walters & Sons, Corp.
P.O. Box 388
6600 Midland Ct.
Allenton, WI 53002
1-800-558-7800
www.waltersbuildings.com

OWNER NAME:
JOHN FISCHER

OWNER ADDRESS:
2525 AVIATION DRIVE
WAUKESHA, WI 53188
WAUKESHA COUNTY

PROJECT NAME:
60x64 AIRPLANE HANGAR #1

PROJECT ADDRESS:
2525 AVIATION DRIVE
WAUKESHA, WI 53188
WAUKESHA COUNTY

SALES REP / DEALER:
MARSHALL WISTH

DRAFTER:
ADAM CRAPSER

ESTIMATOR:
CHARLES SMITH

LAST SAVED BY:
ACRAPSER ON: 2/24/2026

PAPER SIZE:
ARCH FULL BLEED C (18.00 X 24.00 INCHES)

SCALE:
AS NOTED

ENGINEER:
CAYNEN KLESSIG

JOB NUMBER:
95-2132

SHEET NUMBER:
D1

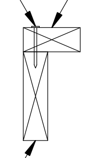

L-STIFFENER DETAIL

FASTEN w/ 16d BOX NAILS OR 0.113x3.25" (MIN) NAILS @ 6" O.C MAX.

* L-STIFFENER MUST EXTENDED TO WITHIN 3 " FROM CHORDS OR TRUSS PLATE EDGES

TRUSS WEB L-STIFFENER DETAIL

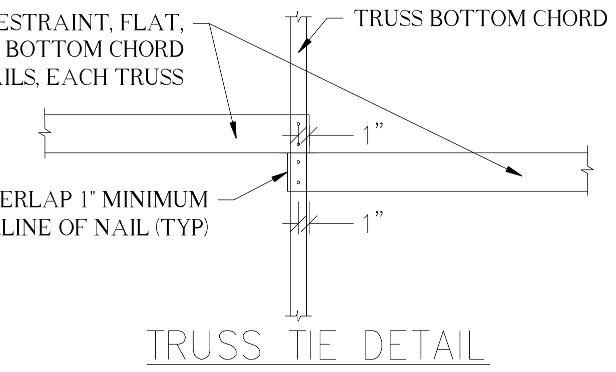

TRUSS TIE DETAIL

PLAN VIEW

EAGLE METAL TRUSS TIE NOTE

PER EAGLE METAL PRODUCTS,
THE BOTTOM CHORD OF METAL PLATED WOOD TRUSSES USED IN POST FRAME CONSTRUCTION MAY BE LATERALLY BRACED AT A SPACING THAT DOES NOT EXCEED 10'-0" O.C. UNDER SPECIFIC CONDITIONS.

A LIST OF THESE SPECIFIC CONDITIONS & EAGLE METAL LETTER ARE AVAILABLE UPON REQUEST FROM WALTERS BUILDINGS.

1 / T1 DETAIL
SCALE: NTS

STANDARD TRUSS FRAMING DETAILS

2 / T1 DETAIL
SCALE: NTS

3 / T1 DETAIL
SCALE: NTS

4 / T1 DETAIL
SCALE: NTS

Walters Buildings
PO Box 388
Allenton, WI 53002
Main: (262) 629-5521; Fax: (262) 629-5233;

Truss:F01 - 60ft truss
Job: 95-2132&33
Date: 12/10/25 08:01:18
Page: 1 of 1

SPAN	PITCH	QTY	OHL	OHR	CANT L	CANT R	PLYS	SPACING	WGT/PLY
59-9-0	4/12	1	0-0-0	0-0-0	0-0-0	0-0-0	1	96 in	712 lbs

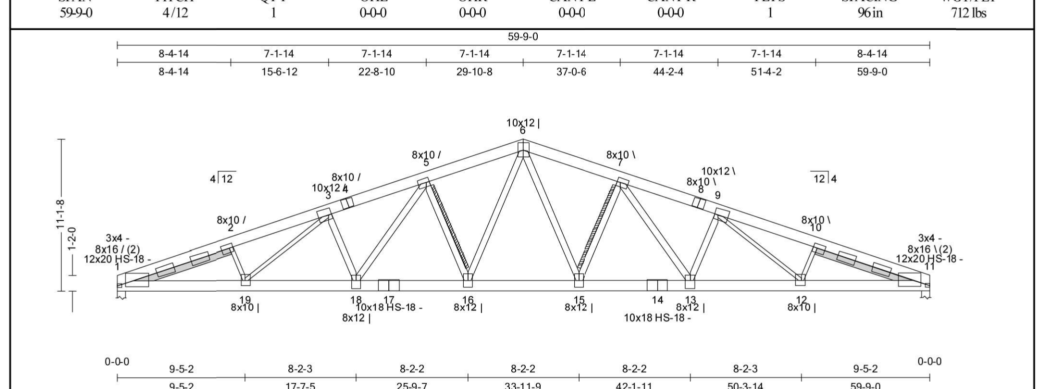

All plates shown to be Eagle 20 unless otherwise noted.

Loading (psf)	General	CSI	Deflection	L/	(loc)	Allowed
TCLL : 26	Bldg Code : IBC 2021/ TPI 1-2014	TC : 0.87 (2-3)	Vert TL: 1.62 in	L / 434	(15-16)	L / 240
GSL : 30	Rep Mbr : No	BC : 0.85 (19-1)	Vert LL: 0.9 in	L / 785	(15-16)	L / 360
TCDL : 4 (rake)	Lumber D.O.L. : 115 %	Web : 0.46 (7-15)	Horz TL: 0.55 in		11	
BCLL : 0						
BCDL : 6						

Reaction

JT	Brg Combo	Brg Width	Rqd Brg Width	Max React	Max Grav Uplift	Max MWFRS Uplift	Max C&C Uplift	Max Uplift	Max Horiz
1	1	7.25 in	7.17 in	8,660 lbs	·	-1,361 lbs	·	-1,361 lbs	125 lbs
11	1	7.25 in	7.17 in	8,660 lbs	·	-1,361 lbs	·	-1,361 lbs	·

Bearing enhancers for slenderness may be required at the following bearings: Brg # 1, 11
See Eagle Metal 'Bearing Enhancer' detail for capacity of specific bearing block(s) and connectors:

Material
TC: SYP 2400/2.0 2 x 10
BC: SYP 2400/2.0 2 x 10
Web: SYP 2400/2.0 2 x 6 except:
SYP #1 2 x 4: 2-19, 3-19, 9-12, 10-12

Bracing
TC: Purlins at 24 " OC, Purlin design by Others.
BC: Sheathed or Purlins at 7-6-0, Purlin design by Others.
Web: T Brace: 5-16, 7-15

Loads
1) This truss has been designed for the effects of balanced (25.2 psf) and unbalanced sloped roof snow loads in accordance with ASCE7 - 16 with the following user defined input: 30 psf GSL, Terrain C, Exposure (Ce = 1.0), Thermal (Ct = 1.20), DOL = 1.15. Ventilated. If the roof configuration differs from hip/gable, Building Designer shall verify snow loads.
2) This truss has been designed for the effects of wind loads in accordance with ASCE7 - 16 with the following user defined input: 115 mph (Factored), Exposure C, Enclosed, Gable, Risk Category II, Overall Bldg Dims 60 ft x 68 ft, h = 26.5 ft, End Zone Truss, Both end webs considered. DOL = 1.60
3) Non-concurrent minimum storage attic loading has been applied in accordance with IBC 1607.1

Member Forces Table indicates: Member ID, max CSI, max tension force, (max compression force). Only forces greater than 300lbs are shown in this table.

TC	1-2	0.655	2,618 lbs	(-15,836 lbs)	3-5	0.724	3,302 lbs	(-18,332 lbs)	6-7	0.595	2,945 lbs	(-15,105 lbs)	9-10	0.871	3,487 lbs	(-20,473 lbs)
	2-3	0.871	3,487 lbs	(-20,473 lbs)	5-6	0.595	2,945 lbs	(-15,105 lbs)	7-9	0.724	3,302 lbs	(-18,332 lbs)	10-11	0.655	2,618 lbs	(-15,836 lbs)
BC	11-12	0.852	19,467 lbs	(-2,929 lbs)	13-15	0.569	15,427 lbs	(-1,983 lbs)	16-18	0.569	15,427 lbs	(-1,983 lbs)	19-1	0.852	19,467 lbs	(-2,929 lbs)
	12-13	0.735	18,011 lbs	(-2,553 lbs)	15-16	0.466	12,632 lbs	(-1,382 lbs)	18-19	0.735	18,011 lbs	(-2,553 lbs)				
Web	2-19	0.151	571 lbs	(-996 lbs)	5-18	0.225	3,297 lbs	(-481 lbs)	6-15	0.388	4,697 lbs	(-599 lbs)	9-13	0.439	860 lbs	(-2,522 lbs)
	3-19	0.317	1,914 lbs		5-16	0.461	1,017 lbs	(-4,284 lbs)	7-15	0.461	1,017 lbs	(-4,284 lbs)	9-12	0.317	1,914 lbs	
	3-18	0.439	860 lbs	(-2,522 lbs)	6-16	0.388	4,697 lbs	(-599 lbs)	7-13	0.225	3,297 lbs	(-481 lbs)	10-12	0.151	571 lbs	(-996 lbs)

Notes
1) Unless noted otherwise, do not cut or alter any truss member or plate without prior approval from a Professional Engineer.
2) The fabrication tolerance for this roof truss is 20 % (Cq = 0.80).
3) Building Designer shall verify self weight of the truss and other dead load materials do not exceed TCDL 4 psf.
4) Design assumes minimum 2x_ (vertical orientation, visually graded) purlins attached to the TC at purlin spacing shown with at least 2-10d nails.
5) Brace bottom chord with approved sheathing or purlins per Bracing Summary.
6) Lateral bracing shown is for illustration purposes only and may be placed on either edge of truss member.
7) A creep factor of 3.00 has been applied for this truss analysis.
8) The "SYP" label shown in the "Material Summary" above indicates the new SPIB design values effective June 1, 2013 were used.
9) At least one web is braced with a L-brace. L-braces shall be min. 2x4 stud grade and shall extend to within 3 " of the chord at both ends. Attach L-braces to web using 16d nails at max. 6 " on center spacing. Brace by others. See BCSI-B3 for additional information.
10) Indicates non-structural members.
11) Listed wind uplift reactions based on MWFRS & C&C loading.

WARNING: Verify all design parameters and follow all notes on this drawing and in the Eagle Metal Design Notes.
This design is for an individual building component (a truss), not a truss system, and is based only on parameters shown and provided by the Building Designer. The applicability of the design parameters must be verified by the Building Designer and should properly incorporate this design into the overall building design before use. Bracing shown is only to prevent buckling of individual truss web and/or chord members. Additional temporary and permanent bracing is always required to prevent collapse and provide stability. Design valid only when Eagle Metal connectors are used. A seal on this drawing indicates acceptance of professional engineering responsibility solely for the truss component design shown.

TrueBuild® Truss Software v5.8.5
Eagle Metal Products

Walters Buildings
PO Box 388
Allenton, WI 53002
Main: (262) 629-5521; Fax: (262) 629-5233;

Truss:F02 - Bifold END outside
Job: 95-2132&33
Date: 01/05/26 11:13:04
Page: 1 of 2

SPAN	PITCH	QTY	OHL	OHR	CANT L	CANT R	PLY(S)	SPACING	WGT/PLY
59-9-0	4/12	1	0-0-0	0-0-0	0-0-0	0-0-0	1	36 in	1,262 lbs

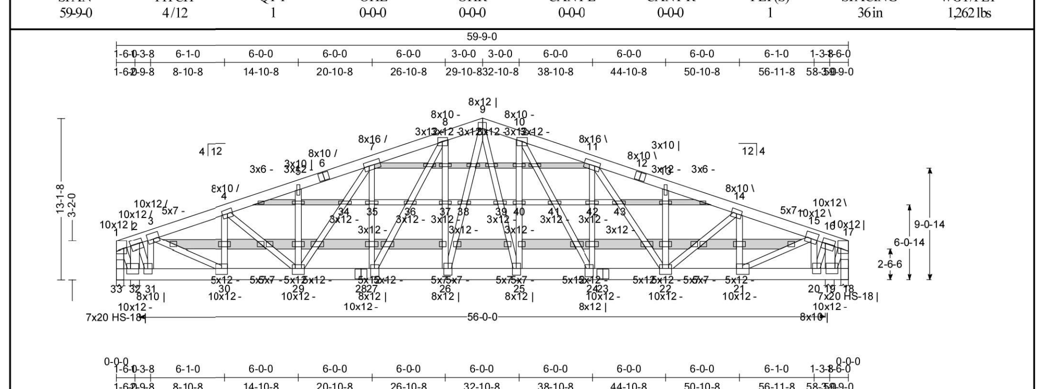

All plates shown to be Eagle 20 unless otherwise noted.

Loading (psf)	General	CSI	Deflection	L/	(loc)	Allowed
TCLL : 26	Bldg Code : IBC 2021/ TPI 1-2014	TC : 0.39 (10-11)	Vert TL: 0.76 in	L / 887	(24-25)	L / 240
GSL : 30	Rep Mbr : No	BC : 0.36 (18-19)	Vert LL: 0.13 in	L / 999	(24-25)	L / 360
TCDL : 4 (rake)	Lumber D.O.L. : 115 %	Web : 0.43 (3-30)	Horz TL: 0.21 in		18	
BCLL : 0						
BCDL : 6						

Reaction

JT	Brg Combo	Brg Width	Rqd Brg Width	Max React	Max Grav Uplift	Max MWFRS Uplift	Max C&C Uplift	Max Uplift	Max Horiz
33	1	7.25 in	N/A	0 lbs	-7,908 lbs	-4,614 lbs	-5,542 lbs	-7,908 lbs	226 lbs
32	1	9 in	19.67 in	15,732 lbs	·	·	·	·	·
19	1	9 in	13.29 in	15,732 lbs	·	·	·	·	·
18	1	7.25 in	N/A	0 lbs	-7,908 lbs	-4,498 lbs	-5,542 lbs	-7,908 lbs	·

Bearing enhancers may be required at the following bearings: Brg # 32, 19
See Eagle Metal 'Bearing Enhancer' detail for capacity of specific bearing block(s) and connectors:

Material
TC: SYP 2400/2.0 2 x 10
BC: SYP 2400/2.0 2 x 12
Web: SYP 2400/2.0 2 x 6 except:
SYP 2400/2.0 2 x 8: 1-33, 17-18
SYP 2400/2.0 2 x 10: 2-32, 16-19

Bracing
TC: Purlins at 24 " OC, Purlin design by Others.
BC: Sheathed or Purlins at 8-0-0, Purlin design by Others.

Loads
1) This truss has been designed for the effects of balanced (25.2 psf) and unbalanced sloped roof snow loads in accordance with ASCE7 - 16 with the following user defined input: 30 psf GSL, Terrain C, Exposure (Ce = 1.0), Thermal (Ct = 1.20), DOL = 1.15. Ventilated. If the roof configuration differs from hip/gable, Building Designer shall verify snow loads.
2) This truss has been designed for the effects of wind loads in accordance with ASCE7 - 16 with the following user defined input: 115 mph (Factored), Exposure C, Enclosed, Gable, Risk Category II, Overall Bldg Dims 60 ft x 68 ft, h = 26.5 ft, End Zone Truss, Both end webs considered. DOL = 1.60
3) Non-concurrent minimum storage attic loading has been applied in accordance with IBC 1607.1

Load Case D1: Std Dead Load

Point Loads

Member	Location	Direction	Load	Trib Width
Bot	1-6-0	Down	463 lbs	
Bot	2-9-8	Down	463 lbs	
Bot	8-10-8	Down	926 lbs	
Bot	14-10-8	Down	926 lbs	
Bot	20-10-8	Down	926 lbs	
Bot	26-10-8	Down	926 lbs	
Bot	32-10-8	Down	926 lbs	
Bot	38-10-8	Down	926 lbs	
Bot	44-10-8	Down	926 lbs	
Bot	50-10-8	Down	926 lbs	
Bot	56-11-8	Down	463 lbs	
Bot	58-3-0	Down	463 lbs	

Member Forces Table indicates: Member ID, max CSI, max tension force, (max compression force). Only forces greater than 300lbs are shown in this table.

TC	1-2	0.329	2,491 lbs		5-7	0.385		(-9,719 lbs)	10-11	0.387		(-9,751 lbs)	15-16	0.203		(-522 lbs)
	2-3	0.203		(-522 lbs)	7-8	0.387		(-9,751 lbs)	11-13	0.385		(-9,719 lbs)	16-17	0.329	2,491 lbs	
	3-4	0.304		(-7,663 lbs)	8-9	0.346		(-8,721 lbs)	13-14	0.385		(-9,722 lbs)				
	4-5	0.385		(-9,722 lbs)	9-10	0.346		(-8,721 lbs)	14-15	0.304		(-7,663 lbs)				

WARNING: Verify all design parameters and follow all notes on this drawing and in the Eagle Metal Design Notes.
This design is for an individual building component (a truss), not a truss system, and is based only on parameters shown and provided by the Building Designer. The applicability of the design parameters must be verified by the Building Designer and should properly incorporate this design into the overall building design before use. Bracing shown is only to prevent buckling of individual truss web and/or chord members. Additional temporary and permanent bracing is always required to prevent collapse and provide stability. Design valid only when Eagle Metal connectors are used. A seal on this drawing indicates acceptance of professional engineering responsibility solely for the truss component design shown.

TrueBuild® Truss Software v5.8.14
Eagle Metal Products

Walters Buildings
PO Box 388
Allenton, WI 53002
Main: (262) 629-5521; Fax: (262) 629-5233;

Truss:F02 - Bifold END outside
Job: 95-2132&33
Date: 01/05/26 11:13:04
Page: 2 of 2

SPAN	PITCH	QTY	OHL	OHR	CANT L	CANT R	PLY(S)	SPACING	WGT/PLY
59-9-0	4/12	1	0-0-0	0-0-0	0-0-0	0-0-0	1	36 in	1,262 lbs

BC	19-20	0.279		(-2,042 lbs)	25-26	0.228	7,943 lbs		31-32	0.279		(-2,042 lbs)				
	21-22	0.267	7,172 lbs		26-27	0.274	8,499 lbs									
	22-24	0.306	9,235 lbs		27-29	0.306	9,235 lbs									
	24-25	0.274	8,499 lbs		29-30	0.267	7,172 lbs									
Web	1-33	0.239	5,745 lbs		35-27	0.133	356 lbs	(-616 lbs)	41-24	0.123	1,803 lbs		17-19	0.264		(-4,561 lbs)
	1-32	0.264		(-4,561 lbs)	36-27	0.123	1,803 lbs		11-42	0.066	307 lbs	(-740 lbs)	17-18	0.239	5,745 lbs	
	2-32	0.267		(-7,549 lbs)	8-36	0.123	1,888 lbs		42-24	0.133	356 lbs	(-616 lbs)				
	2-31	0.298	5,444 lbs		8-37	0.298		(-1,583 lbs)	11-43	0.042		(-363 lbs)				
	3-31	0.363		(-5,639 lbs)	37-26	0.287		(-1,333 lbs)	43-22	0.130		(-434 lbs)				
	3-30	0.429	7,836 lbs		38-26	0.181	2,518 lbs		13-22	0.136		(-536 lbs)				
	4-30	0.372		(-2,872 lbs)	9-38	0.177	2,739 lbs		14-22	0.144	2,623 lbs					
	4-29	0.144	2,623 lbs		9-39	0.177	2,739 lbs		14-21	0.372		(-2,872 lbs)				
	5-29	0.136		(-536 lbs)	39-25	0.181	2,518 lbs		15-21	0.429	7,836 lbs					
	34-29	0.130		(-434 lbs)	10-40	0.298		(-1,583 lbs)	15-20	0.363		(-5,639 lbs)				
	7-34	0.042		(-363 lbs)	40-25	0.287		(-1,333 lbs)	16-20	0.298	5,444 lbs					
	7-35	0.066	307 lbs	(-740 lbs)	10-41	0.123	1,888 lbs		16-19	0.267		(-7,549 lbs)				

Notes
1) Unless noted otherwise, do not cut or alter any truss member or plate without prior approval from a Professional Engineer.
2) Unlabeled plates are 3x12 20ga.
3) The fabrication tolerance for this roof truss is 20 % (Cq = 0.80).
4) Building Designer shall verify self weight of the truss and other dead load materials do not exceed TCDL 4 psf.
5) Design assumes minimum _x2 (flat orientation, visually graded) purlins attached to the top of the TC at purlin spacing shown with at least 2-10d nails.
6) Brace bottom chord with approved sheathing or purlins per Bracing Summary.
7) At least one web of this truss has been designed with a panel point in the web. All panel points on such webs shall be braced laterally perpendicular to the plane of the truss. Lateral braces shall be installed within 6 " of each web panel point.
8) Lateral bracing shown is for illustration purposes only and may be placed on either edge of truss member.
9) A creep factor of 3.00 has been applied for this truss analysis.
10) The "SYP" label shown in the "Material Summary" above indicates the new SPIB design values effective June 1, 2013 were used.
11) Indicates non-structural members.
12) Due to negative reactions in gravity load cases, special connections to the bearing surface at joints 33, 18 may need to be considered.
13) Listed wind uplift reactions based on MWFRS & C&C loading.

WARNING: Verify all design parameters and follow all notes on this drawing and in the Eagle Metal Design Notes.
This design is for an individual building component (a truss), not a truss system, and is based only on parameters shown and provided by the Building Designer. The applicability of the design parameters must be verified by the Building Designer and should properly incorporate this design into the overall building design before use. Bracing shown is only to prevent buckling of individual truss web and/or chord members. Additional temporary and permanent bracing is always required to prevent collapse and provide stability. Design valid only when Eagle Metal connectors are used. A seal on this drawing indicates acceptance of professional engineering responsibility solely for the truss component design shown.

TrueBuild® Truss Software v5.8.14
Eagle Metal Products

Walters Buildings
PO Box 388
Allenton, WI 53002
Main: (262) 629-5521; Fax: (262) 629-5233;

Truss:F03 - Bifold END inside
Job: 95-2132&33
Date: 01/05/26 11:23:12
Page: 1 of 1

SPAN	PITCH	QTY	OHL	OHR	CANT L	CANT R	PLY(S)	SPACING	WGT/PLY
59-9-0	4/12	1	0-0-0	0-0-0	0-0-0	0-0-0	1	60 in	736 lbs

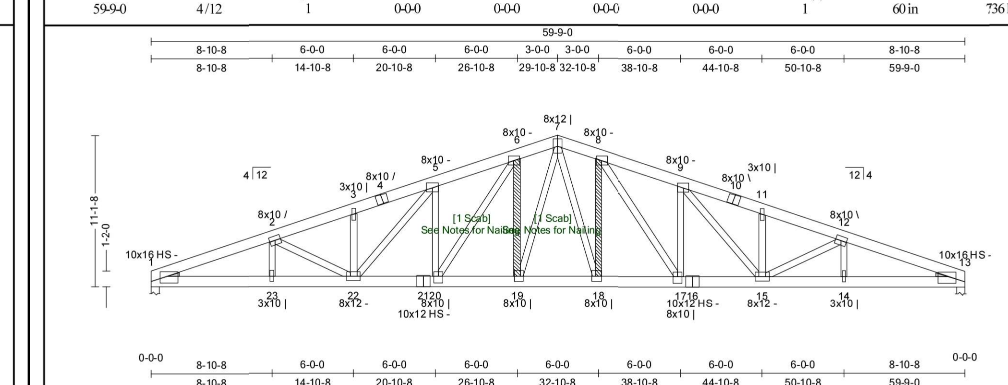

All plates shown to be Eagle 20 unless otherwise noted.

Loading (psf)	General	CSI	Deflection	L/	(loc)	Allowed
TCLL : 26	Bldg Code : IBC 2021/ TPI 1-2014	TC : 0.50 (1-2)	Vert TL: 1.06 in	L / 662	(17-18)	L / 240
GSL : 30	Rep Mbr : No	BC : 0.58 (22-23)	Vert LL: 0.59 in	L / 999	(17-18)	L / 360
TCDL : 4 (rake)	Lumber D.O.L. : 115 %	Web : 0.62 (9-17)	Horz TL: 0.34 in		13	
BCLL : 0						
BCDL : 6						

Reaction

JT	Brg Combo	Brg Width	Rqd Brg Width	Max React	Max Grav Uplift	Max MWFRS Uplift	Max C&C Uplift	Max Uplift	Max Horiz
1	1	7.25 in	4.48 in	5,413 lbs	·	-850 lbs	·	-850 lbs	78 lbs
13	1	7.25 in	4.48 in	5,413 lbs	·	-850 lbs	·	-850 lbs	·

Material
TC: SYP 2400/2.0 2 x 10
BC: SYP 2400/2.0 2 x 10
Web: SYP 2400/2.0 2 x 6
Scabs 6-19 [Qty: 1] SYP 2400/2.0 2 x 6 8-18 [Qty: 1] SYP 2400/2.0 2 x 6

Bracing
TC: Purlins at 24 " OC, Purlin design by Others.
BC: Sheathed or Purlins at 9-10-0, Purlin design by Others.

Loads
1) This truss has been designed for the effects of balanced (25.2 psf) and unbalanced sloped roof snow loads in accordance with ASCE7 - 16 with the following user defined input: 30 psf GSL, Terrain C, Exposure (Ce = 1.0), Thermal (Ct = 1.20), DOL = 1.15. Ventilated. If the roof configuration differs from hip/gable, Building Designer shall verify snow loads.
2) This truss has been designed for the effects of wind loads in accordance with ASCE7 - 16 with the following user defined input: 115 mph (Factored), Exposure C, Enclosed, Gable, Risk Category II, Overall Bldg Dims 60 ft x 68 ft, h = 26.5 ft, End Zone Truss, Both end webs considered. DOL = 1.60
3) Non-concurrent minimum storage attic loading has been applied in accordance with IBC 1607.1

Member Forces Table indicates: Member ID, max CSI, max tension force, (max compression force). Only forces greater than 300lbs are shown in this table.

TC	1-2	0.504	2,071 lbs	(-12,758 lbs)	5-6	0.424	2,089 lbs	(-10,738 lbs)	8-9	0.424	2,089 lbs	(-10,738 lbs)	12-13	0.504	2,071 lbs	(-12,758 lbs)
	2-3	0.478	2,041 lbs	(-12,068 lbs)	6-7	0.358	1,858 lbs	(-9,037 lbs)	9-11	0.478	2,207 lbs	(-12,097 lbs)				
	3-5	0.478	2,207 lbs	(-12,097 lbs)	7-8	0.358	1,858 lbs	(-9,037 lbs)	11-12	0.478	2,041 lbs	(-12,068 lbs)				
BC	13-14	0.576	11,864 lbs	(-1,763 lbs)	17-18	0.315	8,592 lbs	(-983 lbs)	20-22	0.383	10,040 lbs	(-1,295 lbs)				
	14-15	0.576	11,864 lbs	(-1,763 lbs)	18-19	0.282	7,910 lbs	(-850 lbs)	22-23	0.576	11,864 lbs	(-1,763 lbs)				
	15-17	0.383	10,040 lbs	(-1,295 lbs)	19-20	0.315	8,592 lbs	(-983 lbs)	23-1	0.576	11,864 lbs	(-1,763 lbs)				
Web	2-22	0.213		(-903 lbs)	6-20	0.356	2,936 lbs	(-578 lbs)	8-18	0.176	629 lbs	(-2,818 lbs)	11-15	0.138	399 lbs	(-997 lbs)
	3-22	0.138	399 lbs	(-997 lbs)	6-19	0.176	629 lbs	(-2,818 lbs)	8-17	0.356	2,936 lbs	(-578 lbs)	12-15	0.213		(-903 lbs)
	5-22	0.192	2,140 lbs	(-438 lbs)	7-19	0.283	3,143 lbs	(-476 lbs)	9-17	0.619	672 lbs	(-2,322 lbs)				
	5-20	0.619	672 lbs	(-2,322 lbs)	7-18	0.283	3,143 lbs	(-476 lbs)	9-15	0.192	2,140 lbs	(-438 lbs)				

Notes
1) Unless noted otherwise, do not cut or alter any truss member or plate without prior approval from a Professional Engineer.
2) The fabrication tolerance for this roof truss is 20 % (Cq = 0.80).
3) Building Designer shall verify self weight of the truss and other dead load materials do not exceed TCDL 4 psf.
4) Design assumes minimum 2x_ (vertical orientation, visually graded) purlins attached to the TC at purlin spacing shown with at least 2-10d nails.
5) Brace bottom chord with approved sheathing or purlins per Bracing Summary.
6) Lateral bracing shown is for illustration purposes only and may be placed on either edge of truss member.
7) A creep factor of 3.00 has been applied for this truss analysis.
8) The "SYP" label shown in the "Material Summary" above indicates the new SPIB design values effective June 1, 2013 were used.
9) Indicates non-structural members.
10) Scab 6 - 19 to match size and grade of member to which it is attached. Attach with 2 staggered rows of 10d Nails or Gun Nails [min 0.120"x2.875"] @ 6" oc.
11) Scab 8 - 18 to match size and grade of member to which it is attached. Attach with 2 staggered rows of 10d Nails or Gun Nails [min 0.120"x2.875"] @ 6" oc.
12) Listed wind uplift reactions based on MWFRS & C&C loading.

WARNING: Verify all design parameters and follow all notes on this drawing and in the Eagle Metal Design Notes.
This design is for an individual building component (a truss), not a truss system, and is based only on parameters shown and provided by the Building Designer. The applicability of the design parameters must be verified by the Building Designer and should properly incorporate this design into the overall building design before use. Bracing shown is only to prevent buckling of individual truss web and/or chord members. Additional temporary and permanent bracing is always required to prevent collapse and provide stability. Design valid only when Eagle Metal connectors are used. A seal on this drawing indicates acceptance of professional engineering responsibility solely for the truss component design shown.

TrueBuild® Truss Software v5.8.14
Eagle Metal Products

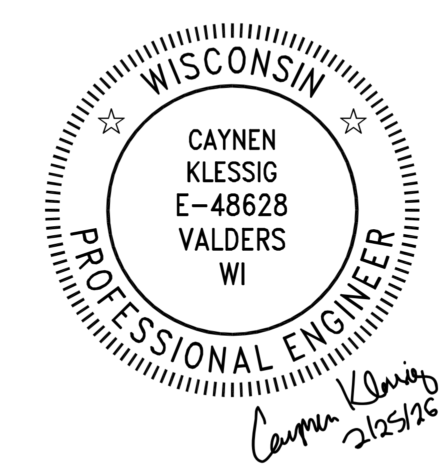

Walters Buildings®
Jack Walters & Sons, Corp.
P.O. Box 388
6600 Midland Ct.
Allenton, WI 53002
1-800-558-7800
www.waltersbuildings.com

OWNER NAME:
JOHN FISCHER

OWNER ADDRESS:
2525 AVIATION DRIVE
WAUKESHA, WI 53188
WAUKESHA COUNTY

PROJECT NAME:
60x64 AIRPLANE HANGAR #1

PROJECT ADDRESS:
2525 AVIATION DRIVE
WAUKESHA, WI 53188
WAUKESHA COUNTY

SALES REP / DEALER:
MARSHALL WISTH

DRAFTER:
ADAM CRAPSER

ESTIMATOR:
CHARLES SMITH

LAST SAVED BY:
ACRAPSER ON: 2/24/2026

PAPER SIZE:
ARCH FULL BLEED C (18.00 X 24.00 INCHES)

SCALE:
AS NOTED

ENGINEER:
CAYNEN KLESSIG

JOB NUMBER:
95-2132

SHEET NUMBER:
T1

1 SP SITE PLAN
SCALE: 1:750

Walters Buildings
Jack Walters & Sons, Corp.
P.O. Box 388
6600 Midland Ct.
Allenton, WI 53002
1-800-558-7800
www.waltersbuildings.com

OWNER NAME:
JOHN FISCHER

OWNER ADDRESS:
2525 AVIATION DRIVE
WAUKESHA, WI 53188
WAUKESHA COUNTY

PROJECT NAME:
60x64 AIRPLANE HANGAR #1

PROJECT ADDRESS:
2525 AVIATION DRIVE
WAUKESHA, WI 53188
WAUKESHA COUNTY

SALES REP / DEALER:
MARSHALL WISTH

DRAFTER:
ADAM CRAPSER

ESTIMATOR:
CHARLES SMITH

LAST SAVED BY:
ACRAPSER ON: 2/24/2026

PAPER SIZE:
ARCH FULL BLEED C (18.00 X 24.00 INCHES)

SCALE: 1" = 750'
0 375' 750'

ENGINEER:
CAYNEN KLESSIG

JOB NUMBER:
95-2132

SHEET NUMBER:
SP