PROJECT DATA

BLDG	UNITS						PARKING PROVIDED				
	JR 1BR	1BR	2BR	3BR	TOTAL	BR'S	COVERED	SURFACE	TOTALS	RATIOS	
A	0	27	22	3	52	80	42	58	100	1.92 / U	1.25 / BR
	2,900 S.F. RESIDENTIAL COMMON SPACE										
B	2	4	2	12	20	46	10	29	39	1.95 / U	0.85 / BR
T	2	31	24	15	72	123	52	87	139	1.93 / U	1.13 / BR
	3%	43%	33%	21%							

JLA ARCHITECTS

FRAME PARK COMMONS

CONCEPTUAL MASTERPLAN

SEPT 17, 2019
1"=60' @ 11x17

THESE PLANS AND DESIGNS ARE COPYRIGHT PROTECTED AND MAY NOT BE USED IN WHOLE OR IN PART WITHOUT THE WRITTEN CONSENT OF PINNACLE ENGINEERING GROUP, LLC

DRAFTED: JSJ DESIGNED: JSJ REVIEWED: DJB

CONCEPT PLANT TREE & TURF KEY

EVERGREEN TREE
Abies concolor / White Fir
Picea pungens / Colorado Spruce
Thuja plicata 'Green Giant' / Western Red Cedar

DECIDUOUS TREES
Acer x freemanii 'Autumn Fantasy' / Autumn Fantasy Maple
Celtis occidentalis / Common Hackberry
Gleditsia triacanthos inermis 'Shademaster' / Shademaster Locust
Gymnocladus dioica / Kentucky Coffee Tree
Quercus x schuettii / Swamp Bur Oak
Tilia tomentosa / Silver Linden

ORNAMENTAL TREE
Amelanchier x grandiflora 'Autumn Brilliance' / 'Autumn Brilliance' Serviceberry
Malus x 'Adirondak' / Adirondak Crab Apple
Malus x 'Royal Raindrops' / Royal Raindrops Crabapple
Syringa reticulata 'Ivory Silk' / Ivory Silk Japanese Tree Lilac

TURF
Sod / Sod
Turf Hydroseed / Drought Tolerant Fescue Blend

NORTH

GRAPHICAL SCALE (FEET)
0 1" = 30' 60'

PLAN I DESIGN I DELIVER
www.pinnacle-engr.com

PINNACLE ENGINEERING GROUP
ENGINEERING I NATURAL RESOURCES I SURVEYING

WISCONSIN OFFICE:
2072S WATERTOWN ROAD
BROOKFIELD, WI 53186
(262) 754-8888
CHICAGO I MILWAUKEE - NATIONWIDE

FRAME PARK COMMONS

WAUKESHA, WI

OVERALL LANDSCAPE PLAN

REVISIONS

PEG JOB No. 1545.00-WI
PEG PM MAC
START DATE 01/20/2015
SCALE 1" = 30'

SHEET
L-1
L-7

OVERALL LANDSCAPE PLAN

FOR REVIEW ONLY

www.pinnacle-engr.com

© COPYRIGHT 2014

Z:\PROJECTS\2018\1545.00-WI\CAD\SHEETS\1545.00-WI LANDSCAPE.DWG

THESE PLANS AND DESIGNS ARE COPYRIGHT PROTECTED AND MAY NOT BE USED IN WHOLE OR IN PART, WITHOUT THE WRITTEN CONSENT OF PINNACLE ENGINEERING GROUP, LLC

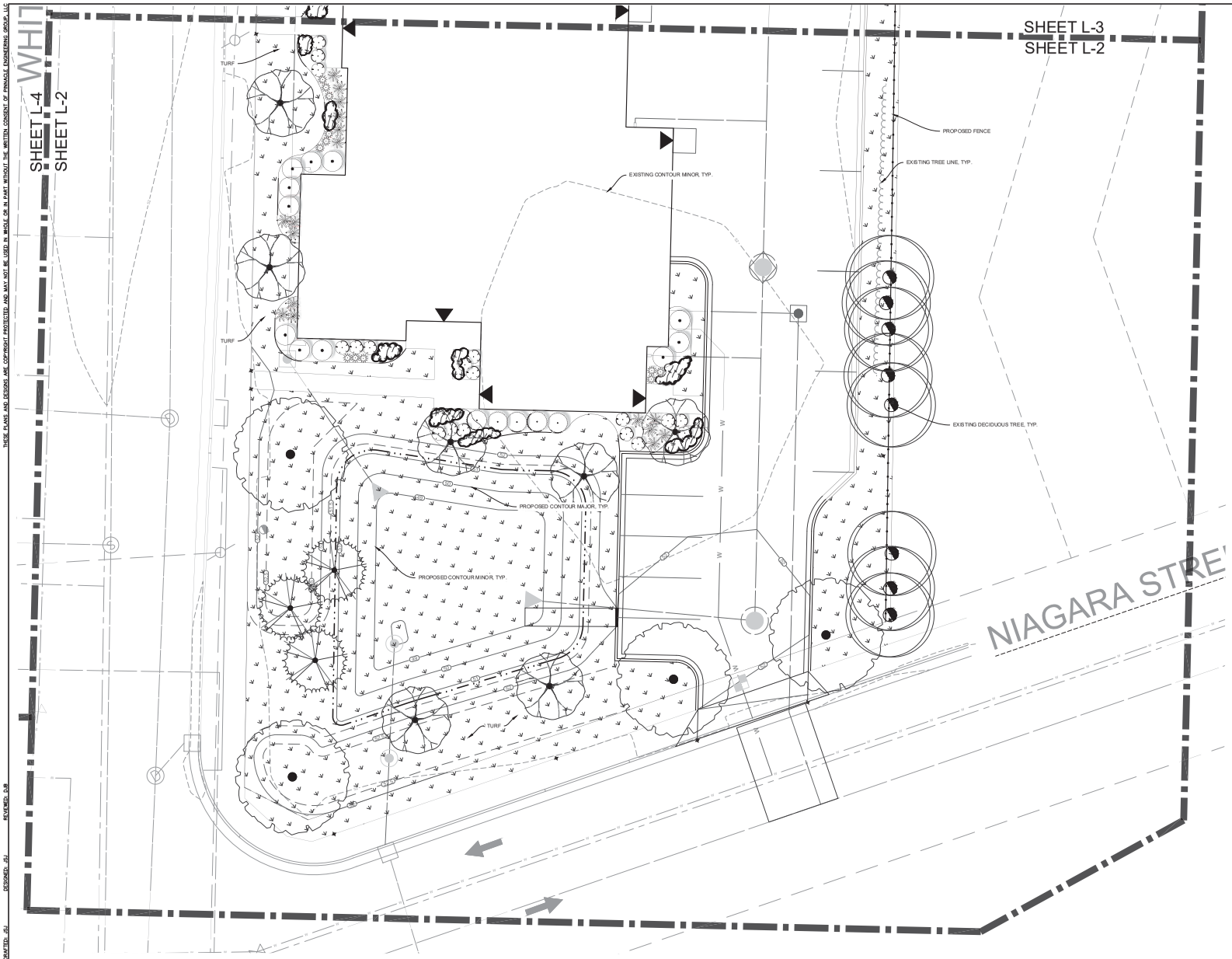

CONCEPT PLANT KEY

LARGE SHRUB DECIDUOUS
Cephalanthus occidentalis / Buttonbush
Corylus americana / American Hazelnut
Physocarpus opulifolius `Center Glow` / Center Glow Ninebark
Sambucus nigra `Black Lace` / Black Lace Elderberry
Syringa patula `Miss Kim` / Miss Kim Lilac
Viburnum dentatum `Blue Muffin` / Southern Arrowwood

LARGE SHRUB EVERGREEN
Juniperus chinensis `Hetzii Glauca` / Hetzi Blue Juniper
Juniperus chinensis `Hetzii` / Hetzi Juniper
Juniperus chinensis `Mountbatten` / Chinese Juniper
Juniperus chinensis `Old Gold` / Old Gold Juniper
Juniperus chinensis `Pfitzeriana Glauca` / Blue Pfitzer Juniper
Juniperus x `J.N Select Blue` / Star Power Juniper
Pinus mugo pumilio / Dwarf Mugo Pine
Thuja occidentalis `Holmstrup` / Holmstrup Cedar

MEDIUM SHRUB DECIDUOUS
Cornus stolonifera `Arctic Fire` / Arctic Fire Dogwood
Hydrangea arborescens `Annabelle` / Annabelle Smooth Hydrangea
Hydrangea paniculata `Vanilla Strawberry` / Vanilla Strawberry Panicled Hydrangea
Rosa rugosa `Blanc de Coubert` / Blanc de Coubert Rugosa Rose
Syringa meyeri `Palibin` / Dwarf Korean Lilac
Viburnum carlesii / Korean Spice Viburnum
Weigela florida `Wine & Roses` / Wine & Roses Weigela

MEDIUM SHRUB EVERGREEN
Juniperus chinensis `Ames` / Ames Juniper
Juniperus chinensis `Old Gold` / Old Gold Juniper
Juniperus chinensis `Sea Green` / Sea Green Juniper
Juniperus squamata `Blue Star` / Blue Star Juniper
Taxus x media `Densiformis` / Dense Yew
Taxus x media `Tauntonii` / Tauton Yew
Thuja occidentalis `Smaragd` / Emerald Green Arborvitae

SMALL SHRUB DECIDUOUS
Aronia melanocarpa `Low Scape Mound` / Low Scape Mound Chokeberry
Diervilla lonicera / Dwarf Bush Honeysuckle
Hydrangea paniculata `Bobo` / Bobo Hydrangea
Hydrangea serrata `Tuff Stuff` / Tuff Stuff Hydrangea
Hypericum kalmianum / Kalm St. Johnswort
Spiraea beullifolia `Tor` / Birchleaf Spirea
Spiraea japonica `Magic Carpet` / Magic Carpet Spirea
Weigela florida `Dark Horse` / Weigela

ORNAMENTAL GRASSES TALL
Calamagrostis x acutiflora `Karl Foerster` / Feather Reed Grass
Miscanthus sinensis `Morning Light` / Eulalia Grass
Panicum virgatum `Northwind` / Switch Grass

ORNAMENTAL GRASS-SHORT
Chasmanthium latifolium / Northern Sea Oats
Schizachyrium scoparium `Blue Heaven` / Blue Heaven Little Bluestem
Sporobolus heterolepis `Tara` / Prairie Dropseed

PERENNIAL
Allium x `Summer Beauty` / Summer Beauty Allium
Coreopsis verticillata `Zagreb` / Zagreb Thread Leaf Coreopsis
Echinacea purpurea `Magnus Superior` / Magnus Superior Coneflower
Geranium x cantabrigiense `Biokovo Carmina` / Biokovo Carmina Cranesbill
Geum x `Mai Tai` / Mai Tai Grecian Rose
Hemerocallis x `Stella de Oro` / Stella de Oro Daylily
Nepeta x faassenii `Novanepjun` / Junior Walker Catmint
Rudbeckia fulgida speciosa `Viette`s Little Suzy` / Coneflower
Salvia nemorosa `May Night` / May Night Sage
Sedum x `Autumn Joy` / Autumn Joy Sedum

TURF
Sod / Sod
Turf Hydroseed / Drought Tolerant Fescue Blend

www.pinnacle-engr.com

FOR REVIEW ONLY

ENLARGED LANDSCAPE PLAN

©COPYRIGHT 2014

DRAFTED: JSJ DESIGNED: JSJ REVIEWED: DJB

PLAN I DESIGN I DELIVER
www.pinnacle-engr.com
PINNACLE ENGINEERING GROUP
ENGINEERING I NATURAL RESOURCES I SURVEYING
WISCONSIN OFFICE:
20725 WATERTOWN ROAD
BROOKFIELD, WI 53186
(262) 754-8888
CHICAGO I MILWAUKEE I NATIONWIDE

FRAME PARK COMMONS

WAUKESHA, WI

ENLARGED LANDSCAPE PLAN

REVISIONS

PEG JOB No. 1545.00-WI
PEG PM MAC
START DATE 01/20/2015
SCALE 1"=10'

SHEET
L-2
L-7

Z:\PROJECTS\2018\1545.00-WI\CAD\SHEETS\1545.00-WI LANDSCAPE.DWG

THESE PLANS AND DESIGNS ARE COPYRIGHT PROTECTED AND MAY NOT BE USED, IN WHOLE OR IN PART, WITHOUT THE WRITTEN CONSENT OF PINNACLE ENGINEERING GROUP, LLC

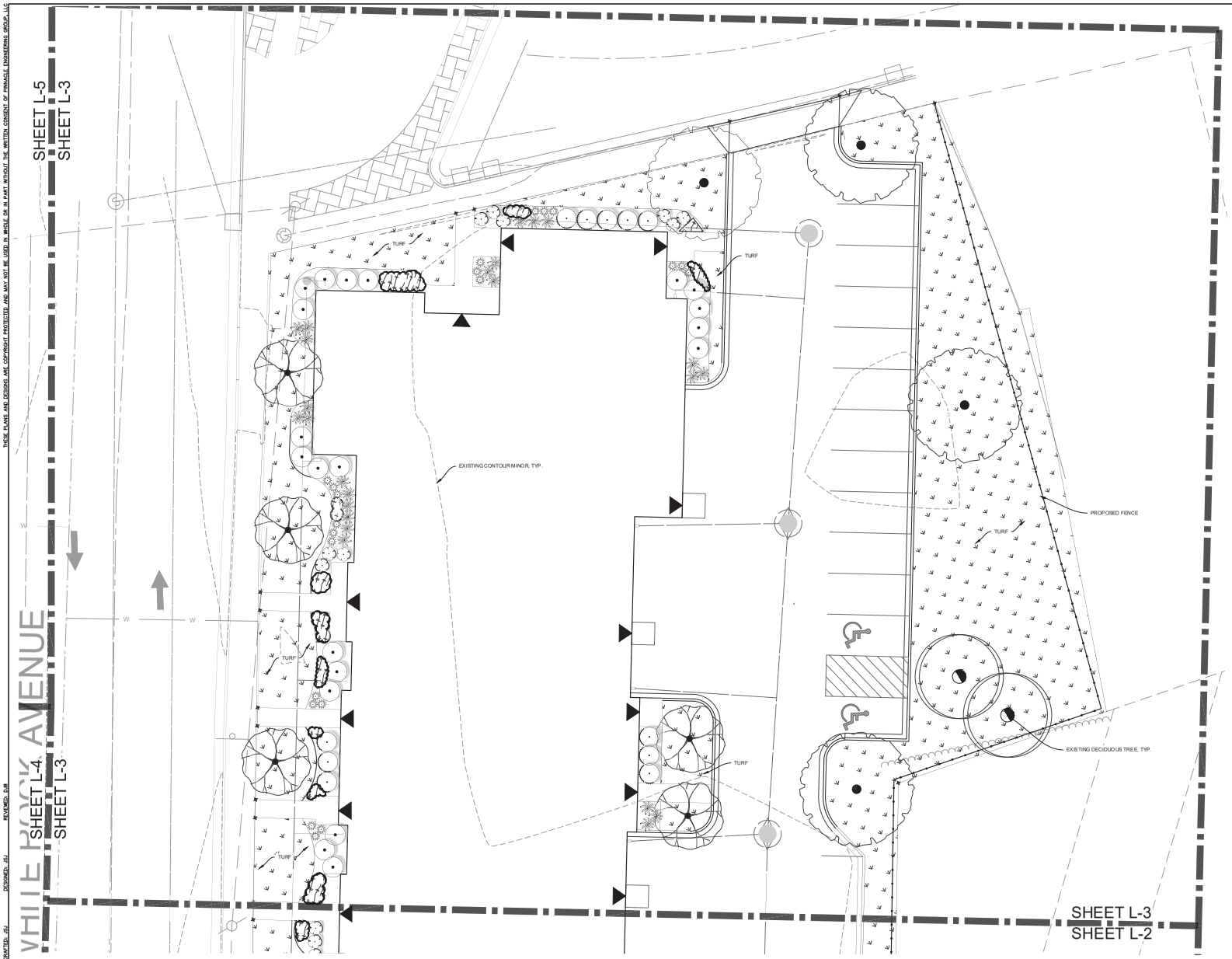

CONCEPT PLANT KEY

LARGE SHRUB DECIDUOUS
Cephalanthus occidentalis / Buttonbush
Corylus americana / American Hazelnut
Physocarpus opulifolius `Center Glow` / Center Glow Ninebark
Sambucus nigra `Black Lace` / Black Lace Elderberry
Syringa patula `Miss Kim` / Miss Kim Lilac
Viburnum dentatum `Blue Muffin` / Southern Arrowwood

LARGE SHRUB EVERGREEN
Juniperus chinensis `Hetzii Glauca` / Hetzi Blue Juniper
Juniperus chinensis `Hetzii` / Hetzi Juniper
Juniperus chinensis `Mountbatten` / Chinese Juniper
Juniperus chinensis `Old Gold` / Old Gold Juniper
Juniperus chinensis `Pfitzeriana Glauca` / Blue Pfitzer Juniper
Juniperus x `J.N Select Blue` / Star Power Juniper
Pinus mugo pumilio / Dwarf Mugo Pine
Thuja occidentalis `Holmstrup` / Holmstrup Cedar

MEDIUM SHRUB DECIDUOUS
Cornus stolonifera `Arctic Fire` / Arctic Fire Dogwood
Hydrangea arborescens `Annabelle` / Annabelle Smooth Hydrangea
Hydrangea paniculata `Vanilla Strawberry` / Vanilla Strawberry Panicled Hydrangea
Rosa rugosa `Blanc de Coubert` / Blanc de Coubert Rugosa Rose
Syringa meyeri `Palibin` / Dwarf Korean Lilac
Viburnum carlesii / Korean Spice Viburnum
Weigela florida `Wine & Roses` / Wine & Roses Weigela

MEDIUM SHRUB EVERGREEN
Juniperus chinensis `Ames` / Ames Juniper
Juniperus chinensis `Old Gold` / Old Gold Juniper
Juniperus chinensis `Sea Green` / Sea Green Juniper
Juniperus squamata `Blue Star` / Blue Star Juniper
Taxus x media `Densiformis` / Dense Yew
Taxus x media `Tauntonii` / Tauton Yew
Thuja occidentalis `Smaragd` / Emerald Green Arborvitae

SMALL SHRUB DECIDUOUS
Aronia melanocarpa `Low Scape Mound` / Low Scape Mound Chokeberry
Diervilla lonicera / Dwarf Bush Honeysuckle
Hydrangea paniculata `Bobo` / Bobo Hydrangea
Hydrangea serrata `Tuff Stuff` / Tuff Stuff Hydrangea
Hypericum kalmianum / Kalm St. Johnswort
Spiraea betulifolia `Tor` / Birchleaf Spirea
Spiraea japonica `Magic Carpet` / Magic Carpet Spirea
Weigela florida `Dark Horse` / Weigela

ORNAMENTAL GRASSES TALL
Calamagrostis x acutiflora `Karl Foerster` / Feather Reed Grass
Miscanthus sinensis `Morning Light` / Eulalia Grass
Panicum virgatum `Northwind` / Switch Grass

ORNAMENTAL GRASS-SHORT
Chasmanthium latifolium / Northern Sea Oats
Schizachyrium scoparium `Blue Heaven` / Blue Heaven Little Bluestem
Sporobolus heterolepis `Tara` / Prairie Dropseed

PERENNIAL
Allium x `Summer Beauty` / Summer Beauty Allium
Coreopsis verticillata `Zagreb` / Zagreb Thread Leaf Coreopsis
Echinacea purpurea `Magnus Superior` / Magnus Superior Coneflower
Geranium x cantabrigiense `Biokovo Carmina` / Biokovo Carmina Cranesbill
Geum x `Mai Tai` / Mai Tai Grecian Rose
Hemerocallis x `Stella de Oro` / Stella de Oro Daylily
Nepeta x faassenii `Novanepjun` / Junior Walker Catmint
Rudbeckia fulgida speciosa `Viette`s Little Suzy` / Coneflower
Salvia nemorosa `May Night` / May Night Sage
Sedum x `Autumn Joy` / Autumn Joy Sedum

TURF
Sod / Sod
Turf Hydroseed / Drought Tolerant Fescue Blend

NORTH

GRAPHICAL SCALE (FEET)
0 1" = 10' 20'

PLAN I DESIGN I DELIVER
www.pinnacle-engr.com

PINNACLE ENGINEERING GROUP
ENGINEERING I NATURAL RESOURCES I SURVEYING

WISCONSIN OFFICE:
20725 WATERTOWN ROAD
BROOKFIELD, WI 53186
(262) 754-8888
CHICAGO I MILWAUKEE I NATIONWIDE

FRAME PARK COMMONS

WAUKESHA, WI

ENLARGED LANDSCAPE PLAN

REVISIONS

PROJ. ID# 1545.00-WI
PROJ. MGR. MAC
START DATE 01/20/2015
SCALE 1"=10'

SHEET
L-3
L-7

ENLARGED LANDSCAPE PLAN

FOR REVIEW ONLY

www.pinnacle-engr.com

DRAFTED: JSJ DESIGNED: JSJ REVIEWED: DJB

Z:\PROJECTS\2018\1545.00-WI\CAD\SHEETS\1545.00-WI LANDSCAPE.DWG

THESE PLANS AND DESIGNS ARE COPYRIGHT PROTECTED AND MAY NOT BE USED IN WHOLE OR IN PART, WITHOUT THE WRITTEN CONSENT OF PINNACLE ENGINEERING GROUP, LLC

DRAFTED: JSJ DESIGNED: JSJ REVIEWED: DJB

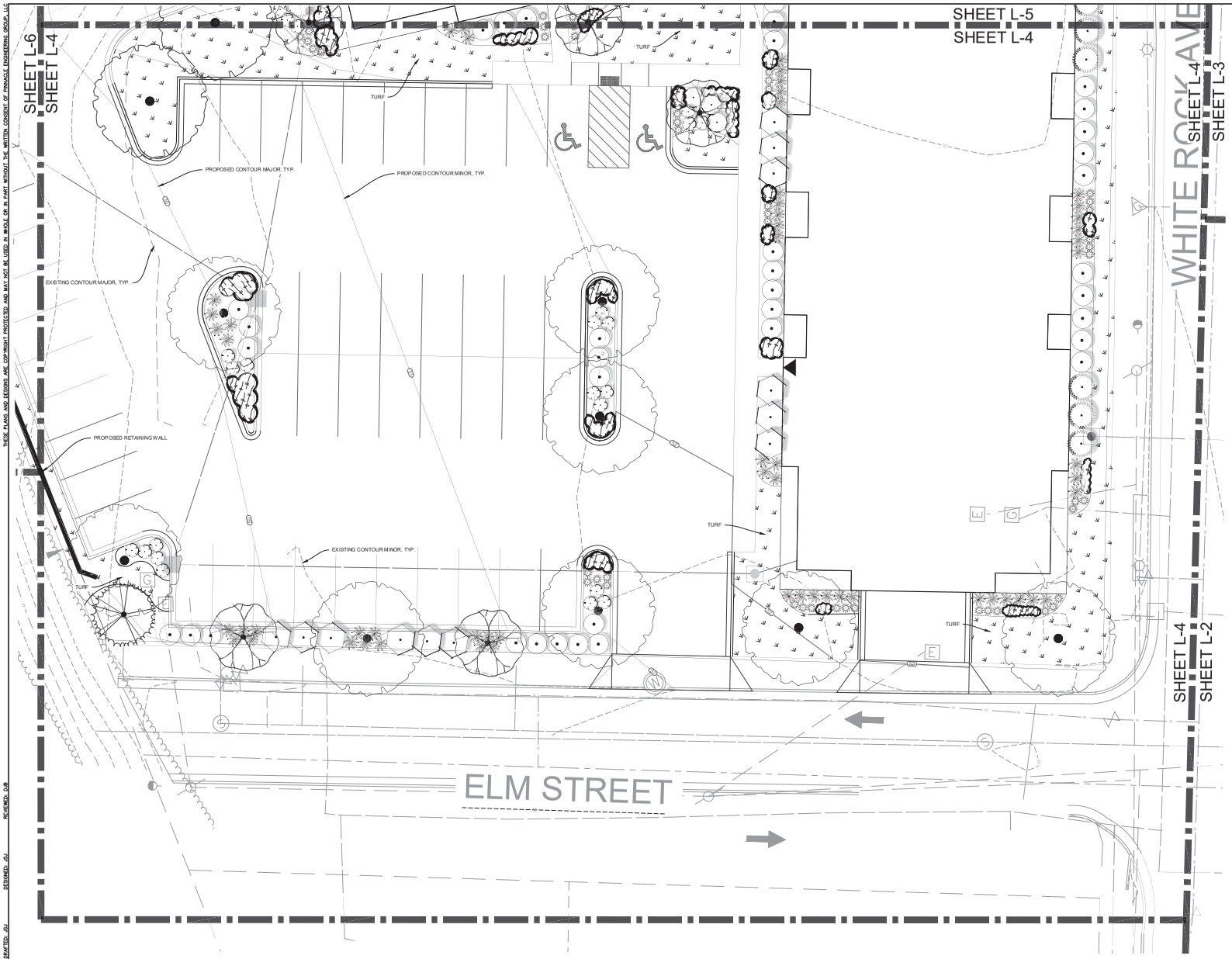

CONCEPT PLANT KEY

LARGE SHRUB DECIDUOUS
Cephalanthus occidentalis / Buttonbush
Corylus americana / American Hazelnut
Physocarpus opulifolius `Center Glow` / Center Glow Ninebark
Sambucus nigra `Black Lace` / Black Lace Elderberry
Syringa patula `Miss Kim` / Miss Kim Lilac
Viburnum dentatum `Blue Muffin` / Southern Arrowwood

LARGE SHRUB EVERGREEN
Juniperus chinensis `Hetzii Glauca` / Hetzi Blue Juniper
Juniperus chinensis `Hetzii` / Hetzi Juniper
Juniperus chinensis `Mountbatten` / Chinese Juniper
Juniperus chinensis `Old Gold` / Old Gold Juniper
Juniperus chinensis `Pfitzeriana Glauca` / Blue Pfitzer Juniper
Juniperus x `J.N Select Blue` / Star Power Juniper
Pinus mugo pumilio / Dwarf Mugo Pine
Thuja occidentalis `Holmstrup` / Holmstrup Cedar

MEDIUM SHRUB DECIDUOUS
Cornus stolonifera `Arctic Fire` / Arctic Fire Dogwood
Hydrangea arborescens `Annabelle` / Annabelle Smooth Hydrangea
Hydrangea paniculata `Vanilla Strawberry` / Vanilla Strawberry Panicled Hydrangea
Rosa rugosa `Blanc de Coubert` / Blanc de Coubert Rugosa Rose
Syringa meyeri `Palibin` / Dwarf Korean Lilac
Viburnum carlesii / Korean Spice Viburnum
Weigela florida `Wine & Roses` / Wine & Roses Weigela

MEDIUM SHRUB EVERGREEN
Juniperus chinensis `Ames` / Ames Juniper
Juniperus chinensis `Old Gold` / Old Gold Juniper
Juniperus chinensis `Sea Green` / Sea Green Juniper
Juniperus squamata `Blue Star` / Blue Star Juniper
Taxus x media `Densiformis` / Dense Yew
Taxus x media `Tauntonii` / Tauton Yew
Thuja occidentalis `Smaragd` / Emerald Green Arborvitae

SMALL SHRUB DECIDUOUS
Aronia melanocarpa `Low Scape Mound` / Low Scape Mound Chokeberry
Diervilla lonicera / Dwarf Bush Honeysuckle
Hydrangea paniculata `Bobo` / Bobo Hydrangea
Hydrangea serrata `Tuff Stuff` / Tuff Stuff Hydrangea
Hypericum kalmianum / Kalm St. Johnswort
Spiraea betulifolia `Tor` / Birchleaf Spirea
Spiraea japonica `Magic Carpet` / Magic Carpet Spirea
Weigela florida `Dark Horse` / Weigela

ORNAMENTAL GRASSES TALL
Calamagrostis x acutiflora `Karl Foerster` / Feather Reed Grass
Miscanthus sinensis `Morning Light` / Eulalia Grass
Panicum virgatum `Northwind` / Switch Grass

ORNAMENTAL GRASS-SHORT
Chasmanthium latifolium / Northern Sea Oats
Schizachyrium scoparium `Blue Heaven` / Blue Heaven Little Bluestem
Sporobolus heterolepis `Tara` / Prairie Dropseed

PERENNIAL
Allium x `Summer Beauty` / Summer Beauty Allium
Coreopsis verticillata `Zagreb` / Zagreb Thread Leaf Coreopsis
Echinacea purpurea `Magnus Superior` / Magnus Superior Coneflower
Geranium x cantabrigiense `Biokovo Carmina` / Biokovo Carmina Cranesbill
Geum x `Mai Tai` / Mai Tai Grecian Rose
Hemerocallis x `Stella de Oro` / Stella de Oro Daylily
Nepeta x faassenii `Novanepjun` / Junior Walker Catmint
Rudbeckia fulgida speciosa `Viette`s Little Suzy` / Coneflower
Salvia nemorosa `May Night` / May Night Sage
Sedum x `Autumn Joy` / Autumn Joy Sedum

TURF
Sod / Sod
Turf Hydroseed / Drought Tolerant Fescue Blend

PLAN I DESIGN I DELIVER
www.pinnacle-engr.com

PINNACLE ENGINEERING GROUP
ENGINEERING I NATURAL RESOURCES I SURVEYING

WISCONSIN OFFICE:
2072S WATERTOWN ROAD
BROOKFIELD, WI 53186
(262) 754-8888
CHICAGO I MILWAUKEE I NATIONWIDE

FRAME PARK COMMONS

WAUKESHA, WI

ENLARGED LANDSCAPE PLAN

REVISIONS

PEG JOB No. 1545.00-WI
PEG PM MAC
START DATE 01/20/2015
SCALE 1"=10'

SHEET
L-4
L-7

ENLARGED LANDSCAPE PLAN

FOR REVIEW ONLY

www.pinnacle-engr.com

©COPYRIGHT 2014

Z:\PROJECTS\2018\1545.00-WI\CAD\SHEETS\1545.00-WI LANDSCAPE.DWG

THESE PLANS AND DESIGNS ARE COPYRIGHT PROTECTED AND MAY NOT BE USED IN WHOLE OR IN PART WITHOUT THE WRITTEN CONSENT OF PINNACLE ENGINEERING GROUP, LLC

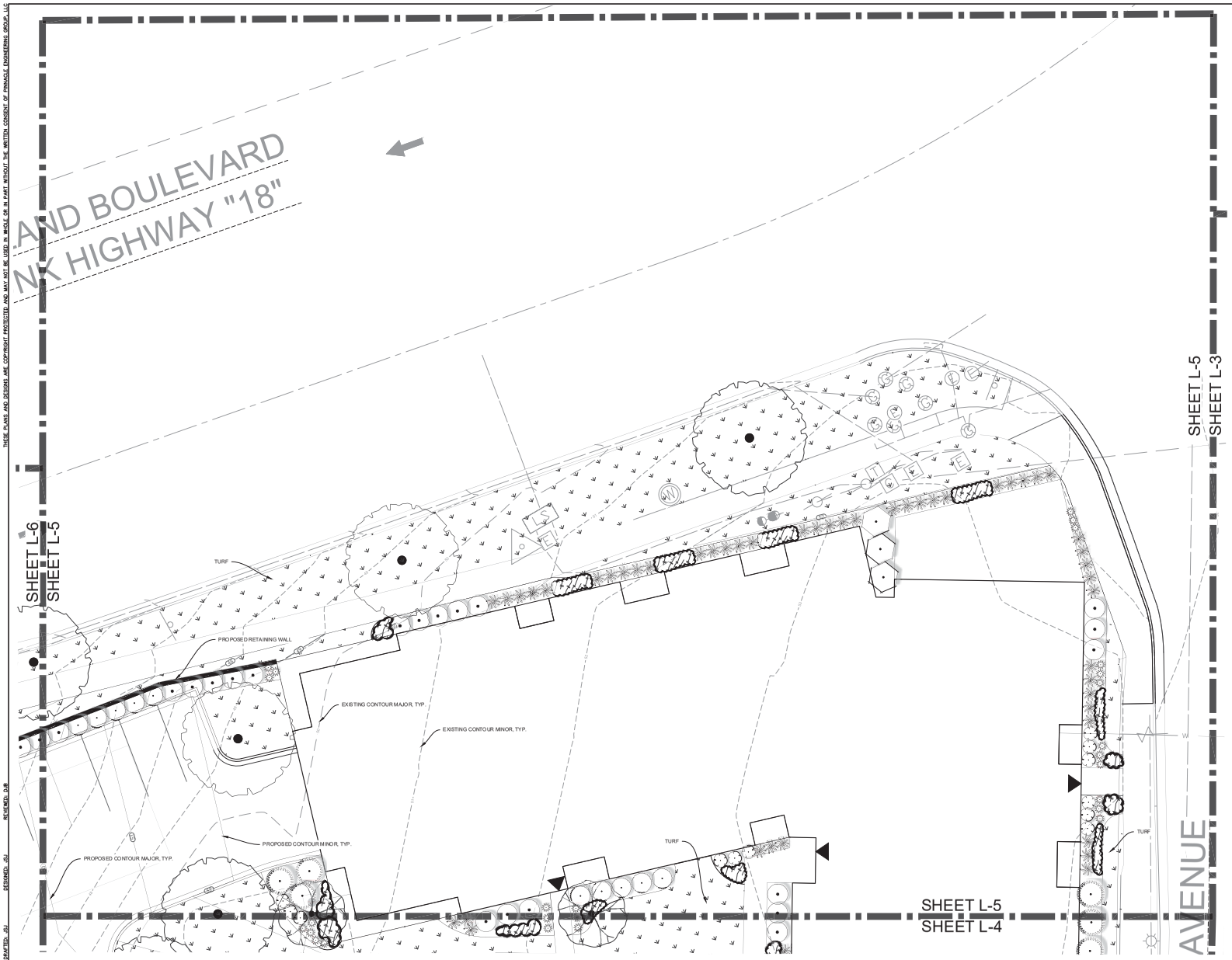

CONCEPT PLANT KEY

LARGE SHRUB DECIDUOUS
Cephalanthus occidentalis / Buttonbush
Corylus americana / American Hazelnut
Physocarpus opulifolius `Center Glow` / Center Glow Ninebark
Sambucus nigra `Black Lace` / Black Lace Elderberry
Syringa patula `Miss Kim` / Miss Kim Lilac
Viburnum dentatum `Blue Muffin` / Southern Arrowwood

LARGE SHRUB EVERGREEN
Juniperus chinensis `Hetzii Glauca` / Hetzi Blue Juniper
Juniperus chinensis `Hetzii` / Hetzi Juniper
Juniperus chinensis `Mountbatten` / Chinese Juniper
Juniperus chinensis `Old Gold` / Old Gold Juniper
Juniperus chinensis `Pfitzeriana Glauca` / Blue Pfitzer Juniper
Juniperus x `J.N Select Blue` / Star Power Juniper
Pinus mugo pumilio / Dwarf Mugo Pine
Thuja occidentalis `Holmstrup` / Holmstrup Cedar

MEDIUM SHRUB DECIDUOUS
Cornus stolonifera `Arctic Fire` / Arctic Fire Dogwood
Hydrangea arborescens `Annabelle` / Annabelle Smooth Hydrangea
Hydrangea paniculata `Vanilla Strawberry` / Vanilla Strawberry Panicled Hydrangea
Rosa rugosa `Blanc de Coubert` / Blanc de Coubert Rugosa Rose
Syringa meyeri `Palibin` / Dwarf Korean Lilac
Viburnum carlesii / Korean Spice Viburnum
Weigela florida `Wine & Roses` / Wine & Roses Weigela

MEDIUM SHRUB EVERGREEN
Juniperus chinensis `Ames` / Ames Juniper
Juniperus chinensis `Old Gold` / Old Gold Juniper
Juniperus chinensis `Sea Green` / Sea Green Juniper
Juniperus squamata `Blue Star` / Blue Star Juniper
Taxus x media `Densiformis` / Dense Yew
Taxus x media `Tauntonii` / Tauton Yew
Thuja occidentalis `Smaragd` / Emerald Green Arborvitae

SMALL SHRUB DECIDUOUS
Aronia melanocarpa `Low Scape Mound` / Low Scape Mound Chokeberry
Diervilla lonicera / Dwarf Bush Honeysuckle
Hydrangea paniculata `Bobo` / Bobo Hydrangea
Hydrangea serrata `Tuff Stuff` / Tuff Stuff Hydrangea
Hypericum kalmianum / Kalm St. Johnswort
Spiraea betulifolia `Tor` / Birchleaf Spirea
Spiraea japonica `Magic Carpet` / Magic Carpet Spirea
Weigela florida `Dark Horse` / Weigela

ORNAMENTAL GRASSES TALL
Calamagrostis x acutiflora `Karl Foerster` / Feather Reed Grass
Miscanthus sinensis `Morning Light` / Eulalia Grass
Panicum virgatum `Northwind` / Switch Grass

ORNAMENTAL GRASS-SHORT
Chasmanthium latifolium / Northern Sea Oats
Schizachyrium scoparium `Blue Heaven` / Blue Heaven Little Bluestem
Sporobolus heterolepis `Tara` / Prairie Dropseed

PERENNIAL
Allium x `Summer Beauty` / Summer Beauty Allium
Coreopsis verticillata `Zagreb` / Zagreb Thread Leaf Coreopsis
Echinacea purpurea `Magnus Superior` / Magnus Superior Coneflower
Geranium x cantabrigiense `Biokovo Carmina` / Biokovo Carmina Cranesbill
Geum x `Mai Tai` / Mai Tai Grecian Rose
Hemerocallis x `Stella de Oro` / Stella de Oro Daylily
Nepeta x faassenii `Novanepjun` / Junior Walker Catmint
Rudbeckia fulgida speciosa `Viette`s Little Suzy` / Coneflower
Salvia nemorosa `May Night` / May Night Sage
Sedum x `Autumn Joy` / Autumn Joy Sedum

TURF
Sod / Sod
Turf Hydroseed / Drought Tolerant Fescue Blend

NORTH

GRAPHICAL SCALE (FEET)
0 1" = 10' 20'

PLAN I DESIGN I DELIVER
www.pinnacle-engr.com

PINNACLE ENGINEERING GROUP
ENGINEERING I NATURAL RESOURCES I SURVEYING

WISCONSIN OFFICE:
2072S WATERTOWN ROAD
BROOKFIELD, WI 53186
(262) 754-8888
CHICAGO I MILWAUKEE I NATIONWIDE

FRAME PARK COMMONS

WAUKESHA, WI

ENLARGED LANDSCAPE PLAN

REVISIONS

PEG JOB No. 1545.00-WI
PEG PM MAC
START DATE 01/20/2015
SCALE 1"=10'

SHEET
L-5
L-7

ENLARGED LANDSCAPE PLAN

FOR REVIEW ONLY

www.pinnacle-engr.com

©COPYRIGHT 2014

DRAFTED: JSJ DESIGNED: JSJ REVIEWED: DJB

Z:\PROJECTS\2018\1545.00-WI\CAD\SHEETS\1545.00-WI LANDSCAPE.DWG

THESE PLANS AND DESIGNS ARE COPYRIGHT PROTECTED AND MAY NOT BE USED, IN WHOLE OR IN PART, WITHOUT THE WRITTEN CONSENT OF PINNACLE ENGINEERING GROUP, LLC

DRAFTED: JSJ DESIGNED: JSJ REVIEWED: DJB

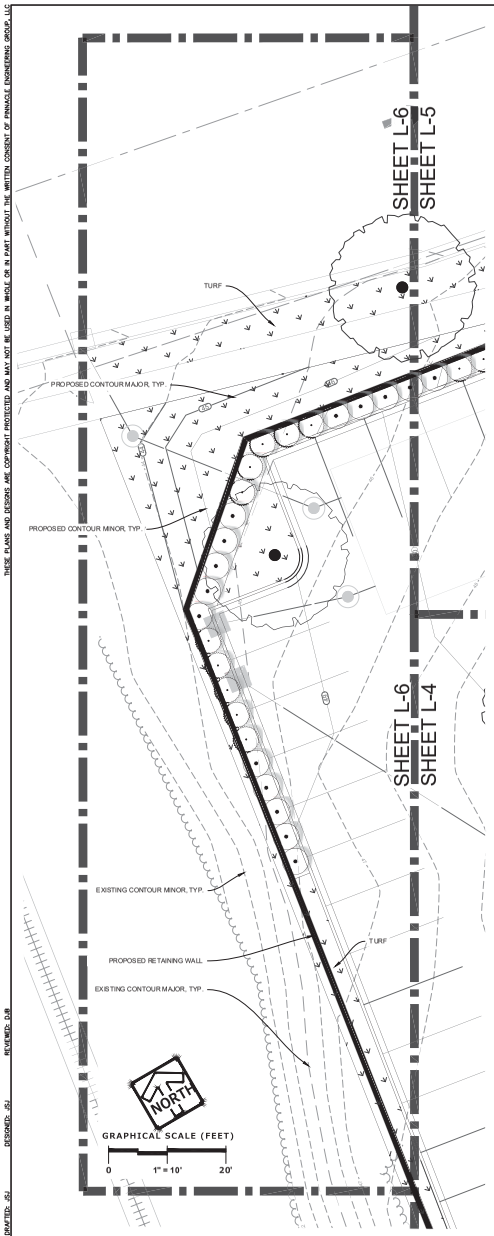

CONCEPT PLANT KEY

LARGE SHRUB DECIDUOUS
Cephalanthus occidentalis / Buttonbush
Corylus americana / American Hazelnut
Physocarpus opulifolius `Center Glow` / Center Glow Ninebark
Sambucus nigra `Black Lace` / Black Lace Elderberry
Syringa patula `Miss Kim` / Miss Kim Lilac
Viburnum dentatum `Blue Muffin` / Southern Arrowwood

LARGE SHRUB EVERGREEN
Juniperus chinensis `Hetzii Glauca` / Hetzi Blue Juniper
Juniperus chinensis `Hetzii` / Hetzi Juniper
Juniperus chinensis `Mountbatten` / Chinese Juniper
Juniperus chinensis `Old Gold` / Old Gold Juniper
Juniperus chinensis `Pfitzeriana Glauca` / Blue Pfitzer Juniper
Juniperus x `J.N Select Blue` / Star Power Juniper
Pinus mugo pumilio / Dwarf Mugo Pine
Thuja occidentalis `Holmstrup` / Holmstrup Cedar

MEDIUM SHRUB DECIDUOUS
Cornus stolonifera `Arctic Fire` / Arctic Fire Dogwood
Hydrangea arborescens `Annabelle` / Annabelle Smooth Hydrangea
Hydrangea paniculata `Vanilla Strawberry` / Vanilla Strawberry Panicled Hydrangea
Rosa rugosa `Blanc de Coubert` / Blanc de Coubert Rugosa Rose
Syringa meyeri `Palibin` / Dwarf Korean Lilac
Viburnum carlesii / Korean Spice Viburnum
Weigela florida `Wine & Roses` / Wine & Roses Weigela

MEDIUM SHRUB EVERGREEN
Juniperus chinensis `Ames` / Ames Juniper
Juniperus chinensis `Old Gold` / Old Gold Juniper
Juniperus chinensis `Sea Green` / Sea Green Juniper
Juniperus squamata `Blue Star` / Blue Star Juniper
Taxus x media `Densiformis` / Dense Yew
Taxus x media `Tauntonii` / Tauton Yew
Thuja occidentalis `Smaragd` / Emerald Green Arborvitae

SMALL SHRUB DECIDUOUS
Aronia melanocarpa `Low Scape Mound` / Low Scape Mound Chokeberry
Diervilla lonicera / Dwarf Bush Honeysuckle
Hydrangea paniculata `Bobo` / Bobo Hydrangea
Hydrangea serrata `Tuff Stuff` / Tuff Stuff Hydrangea
Hypericum kalmianum / Kalm St. Johnswort
Spiraea betulifolia `Tor` / Birchleaf Spirea
Spiraea japonica `Magic Carpet` / Magic Carpet Spirea
Weigela florida `Dark Horse` / Weigela

ORNAMENTAL GRASSES TALL
Calamagrostis x acutiflora `Karl Foerster` / Feather Reed Grass
Miscanthus sinensis `Morning Light` / Eulalia Grass
Panicum virgatum `Northwind` / Switch Grass

ORNAMENTAL GRASS-SHORT
Chasmanthium latifolium / Northern Sea Oats
Schizachyrium scoparium `Blue Heaven` / Blue Heaven Little Bluestem
Sporobolus heterolepis `Tara` / Prairie Dropseed

PERENNIAL
Allium x `Summer Beauty` / Summer Beauty Allium
Coreopsis verticillata `Zagreb` / Zagreb Thread Leaf Coreopsis
Echinacea purpurea `Magnus Superior` / Magnus Superior Coneflower
Geranium x cantabrigiense `Biokovo Carmina` / Biokovo Carmina Cranesbill
Geum x `Mai Tai` / Mai Tai Grecian Rose
Hemerocallis x `Stella de Oro` / Stella de Oro Daylily
Nepeta x faassenii `Novanejun` / Junior Walker Catmint
Rudbeckia fulgida speciosa `Viette's Little Suzy` / Coneflower
Salvia nemorosa `May Night` / May Night Sage
Sedum x `Autumn Joy` / Autumn Joy Sedum

TURF
Sod / Sod
Turf Hydroseed / Drought Tolerant Fescue Blend

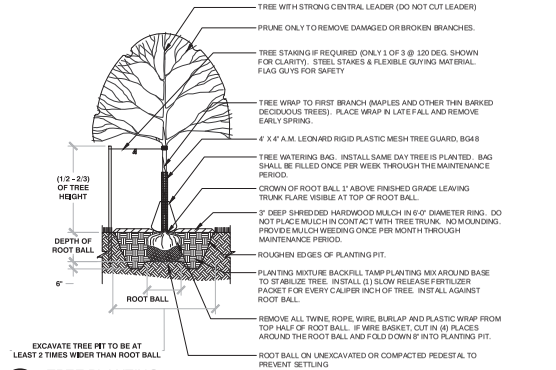

1 TREE PLANTING
1/4" = 1'-0" 329343-01

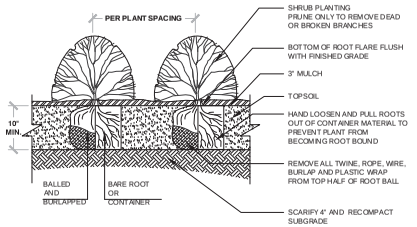

BAREROOT PLANTING NOTES:
1. SOAK ROOTS IN WATER FOR AT LEAST ONE HOUR BUT NOT MORE THAN 24 HOURS PRIOR TO PLANTING.
2. SCARIFY SIDES AND BOTTOMS OF HOLE.
3. PROCEED WITH CORRECTIVE PRUNING OF THE TOP AND BOTTOM ROOTS.
4. TRANSFER PLANT DIRECTLY FROM WATER TO HOLE. SET PLANT SO THE ROOT FLARE IS APPROXIMATELY AT THE FINISHED SOIL ELEVATION. SPREAD ROOTS OUT EVENLY. PLUMB AND IMMEDIATELY BACKFILL WITH PLANTING SOIL MIX.
5. WATER THOROUGHLY WITHIN 2 HOURS TO SETTLE PLANTS AND FILL VOIDS.
6. BACKFILL VOIDS AND WATER SECOND TIME.
7. PLACE MULCH WITHIN 48 HOURS OF THE SECOND WATERING UNLESS SOIL MOISTURE IS EXCESSIVE.

2 SHRUB PLANTING
1/2" = 1'-0" 329333-01

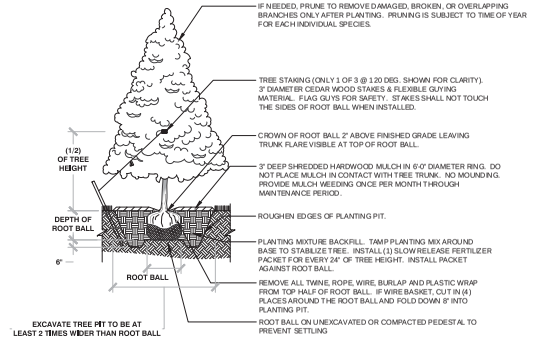

3 EVERGREEN TREE PLANTING
1/4" = 1'-0" 329343-03

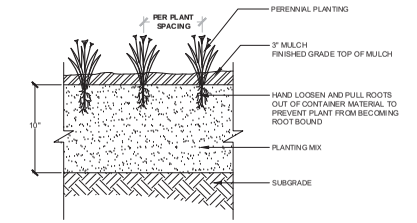

4 PERENNIAL PLANTING
1" = 1'-0" 3293-01

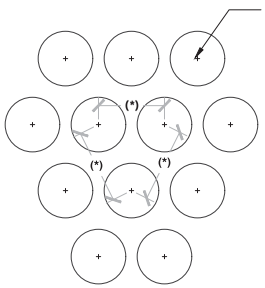

(*) = SPECIFIED PLANT SPACING PER PLANTING LIST

5 PLANT SPACING
3/4" = 1'-0" 3293-02

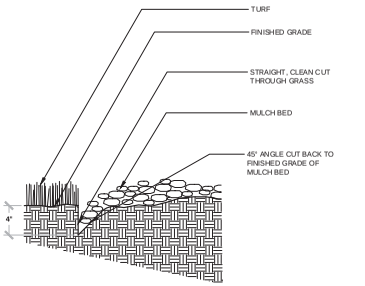

6 TRENCHED BED EDGE
3/4" = 1'-0" 3293-03

PLAN | DESIGN | DELIVER
www.pinnacle-engr.com
PINNACLE ENGINEERING GROUP
ENGINEERING | NATURAL RESOURCES | SURVEYING
WISCONSIN OFFICE:
2072S WATERTOWN ROAD
BROOKFIELD, WI 53186
(262) 754-8888
CHICAGO | MILWAUKEE | NATIONWIDE

FRAME PARK COMMONS

WAUKESHA, WI

ENLARGED LANDSCAPE PLAN & DETAILS

REVISIONS

PROJ. ID# 1545.00-WI
REG. PM MAC
START DATE 01/20/2015
SCALE VARIES

SHEET L-6 L-7

© COPYRIGHT 2014

ENLARGED LANDSCAPE PLAN & DETAILS

FOR REVIEW ONLY

www.pinnacle-engr.com

Z:\PROJECTS\2018\1545.00-WI\CAD\SHEETS\1545.00-WI LANDSCAPE.DWG

GENERAL PLANTING NOTES

1. THE LAYOUT OF ALL PLANTING BEDS AND INDIVIDUAL TREES AND SHRUBS SHALL BE STAKED BY THE CONTRACTOR IN ADVANCE OF INSTALLATION. FLAGGING, STAKES, OR PAINT MAY BE USED TO DELINEATE LOCATIONS AS SCALED FROM THE PLANS. AN APPROVED REPRESENTATIVE WILL REVIEW THESE LOCATIONS WITH THE CONTRACTOR AND MAKE MINOR ADJUSTMENTS AS NECESSARY. BED LAYOUT SHALL ALSO INCLUDE PERENNIAL GROUPINGS BY SPECIES.
2. THE CONTRACTOR IS RESPONSIBLE FOR INDEPENDENTLY DETERMINING THE PLANT MATERIAL QUANTITIES REQUIRED BY THE LANDSCAPE PLANS. REPORT ANY DISCREPANCIES TO THE LANDSCAPE ARCHITECT.
3. THE CONTRACTOR IS RESPONSIBLE FOR INDEPENDENTLY DETERMINING THE PLANT MATERIAL QUANTITIES REQUIRED BY THE LANDSCAPE PLANS. REPORT ANY DISCREPANCIES TO THE LANDSCAPE ARCHITECT.
4. ALL STOCK SHALL BE FREE OF DISEASES AND HARMFUL INSECTS, DAMAGE, DISORDERS AND DEFORMITIES.
5. TREES SHALL HAVE SINGLE, STRAIGHT TRUNKS AND WELL BALANCED BRANCH SYSTEMS. HEIGHT-TO-CALIPER RATIOS SHALL BE CONSISTENT WITH THE LATEST EDITION OF ANSI Z60.1.
6. ROOT SYSTEMS SHALL BE LARGE ENOUGH TO ALLOW FOR FULL RECOVERY OF THE TREE, AND SHALL CONFORM TO STANDARDS AS THEY APPEAR IN THE MOST CURRENT REVISION OF THE AMERICAN ASSOCIATION OF NURSERYMEN'S AMERICAN STANDARD OF NURSERY STOCK ANSI Z60.1.
7. BNB TREES SHALL BE DUG WITH A BALL OF SOIL, NOT SOFT BALLED OR POTTED AND SHALL BE FIRM IN THEIR ROOTBALL. ROOT BALL SHALL BE WRAPPED (WITH BIODEGRADABLE MATERIAL). THE TREE ROOT FLARE, OR COLLAR, SHALL BE AT OR WITHIN THE TOP THREE INCHES OF GRADE.
8. ALL SPRING TREES MUST BE FRESHLY DUG IN THE SPRING.
9. ALL AUTUMN TREES MUST BE FRESHLY DUG IN THE AUTUMN.
10. TREES SHALL BE ALIVE, HEALTHY AND APPROPRIATELY MOIST, AT TIME OF DELIVERY.
11. TREES SHALL BE SUBJECT TO INSPECTION FOR CONFORMITY TO SPECIFICATION REQUIREMENTS AND APPROVAL BY THE LANDSCAPE ARCHITECT OR OWNERS REPRESENTATIVE. THE LANDSCAPE ARCHITECT OR OWNERS REPRESENTATIVE RESERVES THE RIGHT TO REJECT ANY TREES THAT DO NOT MEET THE SPECIFICATIONS OR THAT HAVE BEEN DAMAGED DURING SHIPMENT. THE LANDSCAPE INSTALLER MUST RECEIVE APPROVAL FROM LANDSCAPE ARCHITECT FOR ANY SUBSTITUTIONS OR ALTERATIONS.
12. ALL PLANT MATERIAL AND SEED SHALL BE PROVIDED FROM A NURSERY (WITHIN 200 MILES) WITH A SIMILAR PLANT HARDINESS ZONE AS PROJECT LOCATION. EXISTING SOIL SHALL BE AMENDED PER SOIL ANALYSIS REPORT TO ENSURE A PROPER GROWING MEDIUM IS ACHIEVED.
13. ALL PLANT MATERIAL SHALL BE INSTALLED IN ACCORDANCE WITH PLANTING DETAILS.
14. ALL PLANTING BEDS SHALL HAVE A MINIMUM 10" DEPTH OF PREPARED SOIL. WITH APPROVAL, EXISTING SOIL MAY BE UTILIZED PROVIDED THE PROPER SOIL AMENDMENTS ARE TILLED THOROUGHLY INTO THE TOP 10" OF SOIL. REFER TO SOIL PLACEMENT NOTES.
15. WHILE PLANTING TREES AND SHRUBS, BACKFILL $\frac{2}{3}$ OF PLANTING HOLE AND WATER TREE THOROUGHLY BEFORE INSTALLING THE REMAINDER OF SOIL MIXTURE. AFTER ALL SOIL HAS BEEN PLACED INTO THE PLANTING HOLE WATER THOROUGHLY AGAIN.
16. THE CONTRACTOR MUST LABEL ALL TREES WITH THE COMMON AND BOTANICAL NAMES PRIOR TO FINAL INSPECTION.
17. ALL PLANTING BEDS SHALL BE MULCHED WITH 3" DEEP SHREDDED HARDWOOD MULCH, AND ALL TREES PLANTED IN TURF AREAS SHALL RECEIVE A 3" DEEP SHREDDED HARDWOOD MULCHED RING AS SHOWN IN PLANTING DETAILS.
18. ALL PLANTING BEDS AND TREE RINGS SHALL HAVE A 4" DEEP TRENCHED BED EDGE CREATED BY EITHER A FLAT LANDSCAPE SPADE OR MECHANICAL EDGER. BED EDGES ARE TO BE CUT CLEAN AND SMOOTH AS SHOWN ON LANDSCAPE PLANS WITH A CLEAN DEFINITION BETWEEN TURF AND PLANTING AREAS.
12. ALL SODDED AREAS SHALL RECEIVE A MINIMUM OF 2" DEPTH OF TOPSOIL. WITH APPROVAL, EXISTING SOIL MAY BE UTILIZED PROVIDED THE PROPER SOIL AMENDMENTS ARE TILLED THOROUGHLY INTO THE TOP 6" OF SOIL AS INDICATED IN THE SOIL PLACEMENT NOTES. APPLY A 10-10-10 STARTER FERTILIZER UNIFORMLY AT RECOMMENDED RATES PRIOR TO INSTALLATION OF SOD. INSTALL SOD UNIFORMLY WITH STAGGERED JOINTS, LAID TIGHTLY END TO END AND SIDE TO SIDE. ROLL SOD WITH A WALK BEHIND ROLLER AND WATER IMMEDIATELY TO A DEPTH OF 3". SOD INSTALLED IN SWALES AND ON SLOPES EXCEEDING 1:3 SHALL BE STAKED. CONTRACTOR IS RESPONSIBLE TO PROVIDE A SMOOTH, UNIFORM, HEALTHY LAWN. CONTRACTOR SHALL BE RESPONSIBLE FOR THE FIRST 2 MOWINGS AND WATERING DURING THIS ESTABLISHMENT PERIOD.
13. ALL TURF SEED AREAS SHALL HAVE A MINIMUM DEPTH OF 6" OF TOPSOIL. WITH APPROVAL, EXISTING SOIL MAY BE UTILIZED PROVIDED THE PROPER SOIL AMENDMENTS ARE TILLED THOROUGHLY INTO THE TOP 6" OF SOIL AS INDICATED IN THE SOIL PLACEMENT NOTES. REQUIRED AMENDMENTS SHALL BE DETERMINED BASED ON A SOIL ANALYSIS TO BE PERFORMED. ALL TOPSOIL AMENDMENT SHALL BE AGED WEED FREE MANURE OR CLASS 1 ORGANIC MATTER.
14. FOR LAWN SEEDING, APPLY A STARTER FERTILIZER AND SEED UNIFORMLY AT THE RATE RECOMMENDED BY MANUFACTURER, AND PROVIDE A MULCH COVERING THAT IS SUITABLE TO PROMOTE SEED GERMINATION AND TURF ESTABLISHMENT. CONTRACTOR TO PROVIDE FERTILIZER, SEED, AND MULCH SPECIFICATIONS TO THE LANDSCAPE ARCHITECT FOR APPROVAL PRIOR TO INSTALLATION. EROSION CONTROL MEASURES ARE TO BE INSTALLED IN THOSE AREAS REQUIRING STABILIZATION (SWALES, SLOPES EXCEEDING 1:3, AND THOSE LOCATIONS INDICATED IN CIVIL DRAWINGS).
15. THE CONTRACTOR TO ENSURE A SMOOTH, UNIFORM QUALITY TURF IS ACHIEVED WITH NO BARE SPOTS LARGER THAN 6" X 6". ANY BARE SPOTS LARGER THAN 6" X6" AT THE END OF ESTABLISHMENT PERIOD SHALL BE RESEEDED AT THE CONTRACTORS EXPENSE TO OBTAIN A DENSE, UNIFORM LAWN.
16. ALL FINISH GRADING AND LAWN AREAS TO BE INSTALLED BY LANDSCAPE CONTRACTOR.
17. ALL DISTURBED AREAS WITHIN THE PROJECT SHALL BE RESTORED TO ORIGINAL OR BETTER CONDITION.
18. ALL DISTURBED AREAS OUTSIDE THE LIMITS OF WORK SHALL BE RESTORED TO ORIGINAL OR BETTER CONDITION AT NO ADDITIONAL COST TO THE OWNER.
19. IT IS THE RESPONSIBILITY OF THE LANDSCAPE INSTALLER TO HAVE UNDERGROUND UTILITIES LOCATED BY DIGGERS HOTLINE PRIOR TO INSTALLATION.
20. CONTRACTOR MUST LABEL ALL TREES WITH THE COMMON AND BOTANICAL NAMES PRIOR TO FINAL INSPECTION.
21. THE CONTRACTOR SHALL ENSURE THAT SOIL CONDITIONS AND COMPACTION ARE ADEQUATE TO ALLOW FOR PROPER DRAINAGE AROUND THE CONSTRUCTION SITE. UNDESIRABLE CONDITIONS SHALL BE BROUGHT TO THE ATTENTION OF THE LANDSCAPE ARCHITECT PRIOR TO BEGINNING OF WORK. IT SHALL BE THE CONTRACTOR'S RESPONSIBILITY TO ENSURE PROPER SURFACE AND SUBSURFACE DRAINAGE IN ALL AREAS
22. THE CONTRACTOR SHALL VERIFY ALL EXISTING UTILITIES, INCLUDING ANY IRRIGATION LINES, PRIOR TO DIGGING. CONSULT DIGGERS HOTLINE.
23. THE CONTRACTOR IS RESPONSIBLE FOR ALL PERMITS, FEES, AND LICENSES NECESSARY FOR THE INSTALLATION OF THIS PLAN.
24. THE CONTRACTOR IS TO REVIEW ALL SITE ENGINEERING DOCUMENTS PRIOR TO INSTALLATION. ANY CONFLICTS MUST BE REPORTED TO THE LANDSCAPE ARCHITECT. THESE LANDSCAPE DRAWINGS ARE FOR THE INSTALLATION OF PLANT MATERIALS ONLY UNLESS OTHERWISE STATED.
25. THE CONTRACTOR SHALL PROVIDE WATERING AND MAINTENANCE SERVICES FOR A PERIOD OF 60 DAYS TO ENSURE VEGETATIVE ESTABLISHMENT. UPON COMPLETION OF THE PROJECT, CONTRACTOR SHALL SUPPLY THE OWNER IN WRITING WITH ONGOING WATERING AND MAINTENANCE INSTRUCTIONS.
26. PLANT MATERIALS SHALL BE GUARANTEED FOR A PERIOD OF TWO (2) YEARS FROM TIME OF OWNER ACCEPTANCE. ONLY ONE REPLACEMENT PER PLANT WILL BE REQUIRED DURING THE WARRANTY PERIOD EXCEPT IN THE EVENT OF FAILURE TO COMPLY WITH THE SPECIFIED REQUIREMENTS.
27. THE CONTRACTOR IS RESPONSIBLE TO CONDUCT A FINAL WALK THROUGH WITH THE LANDSCAPE ARCHITECT AND OR OWNERS REPRESENTATIVE TO ANSWER QUESTIONS, PROVIDE WRITTEN INSTRUCTIONS, AND ENSURE THAT PROJECT REQUIREMENTS HAVE BEEN MET.

SOIL PLACEMENT NOTES

1. LOOSEN SUBGRADE TO A MINIMUM DEPTH INDICATED IN PLANTING NOTES USING A CULTI-MULCHER OR SIMILAR EQUIPMENT, AND REMOVE STONES MEASURING OVER 1-1/2 INCHES IN ANY DIMENSION, STICKS, RUBBISH AND OTHER EXTRANEOUS MATTER. INTERNAL PARKING ISLANDS SHALL BE LOOSENED TO A DEPTH OF 30".
2. THOROUGHLY BLEND PLANTING SOIL MIX FOR PLANTING BED AREAS. (1 PART EXISTING SOIL, 1 PART TOPSOIL, 1 PART ORGANIC SOIL AMENDMENT, 2.9 POUNDS PER CUBIC YARD OF 4-4-4 ANALYSIS SLOW-RELEASE FERTILIZER)
3. TREE AND SHRUB HOLES SHALL BE FILLED WITH A PREPARED PLANTING MIXTURE OF 1 PART TOPSOIL, 2 PARTS PLANTING SOIL MIX.
4. SPREAD SOIL AND SOIL AMENDMENTS TO DEPTH INDICATED ON DRAWINGS, BUT NOT LESS THAN REQUIRED TO MEET FINISH GRADES AFTER NATURAL SETTLEMENT. (FINISH GRADE OF PLANTING BEDS SHALL BE 3" BELOW ALL ADJACENT SURFACES. FINISH GRADE OF TURF SEEDING AREAS SHALL BE 1" BELOW ALL ADJACENT HARD SURFACES, WALKS, AND CURBS.)
5. PLACE APPROXIMATELY 1/2 OF TOTAL AMOUNT OF SOIL REQUIRED. WORK INTO TOP OF LOOSENED SUBGRADE TO CREATE A TRANSITION LAYER, THEN PLACE REMAINDER OF THE SOIL. SOIL TRANSITION LAYER SHALL BE TILLED TO A MINIMUM DEPTH OF 6" BELOW THE DEPTH OF NEWLY PLACED SOIL. PARKING LOT ISLANDS SHALL BE CROWNED TO A HEIGHT OF 6" TO PROVIDE PROPER DRAINAGE UNLESS OTHERWISE NOTED.
6. DO NOT SPREAD IF PLANTING SOIL OR SUBGRADE IS FROZEN, MUDDY, OR EXCESSIVELY WET.
7. FINISH GRADING: GRADE SOIL TO A SMOOTH, UNIFORM SURFACE PLANE WITH A LOOSE, UNIFORMLY FINE TEXTURE.
8. ROLL AND RAKE, REMOVE RIDGES, AND FILL DEPRESSIONS TO MEET FINISH GRADES.
9. RESTORE PLANTING BEDS IF ERODED OR OTHERWISE DISTURBED AFTER FINISH GRADING AND BEFORE PLANTING.

CONCEPT PLANT SCHEDULE

EVERGREEN TREE	4	
Abies concolor / White Fir		5` Ht.
Picea pungens / Colorado Spruce		5` Ht.
Thuja plicata `Green Giant` / Western Red Cedar		5` Ht.
DECIDUOUS TREES	23	
Acer x freemanii `Autumn Fantasy` / Autumn Fantasy Maple		2.5" Cal.
Celtis occidentalis / Common Hackberry		2.5" Cal.
Gleditsia triacanthos inermis `Shademaster` / Shademaster Locust		2.5" Cal.
Gymnocladus dioica / Kentucky Coffee Tree		2.5" Cal.
Quercus x schuetti / Swamp Bur Oak		2.5" Cal.
Tilia tomentosa / Silver Linden		2.5" Cal.
ORNAMENTAL TREE	17	
Amelanchier x grandiflora `Autumn Brilliance` / `Autumn Brilliance` Serviceberry		6` Ht.
Malus x `Adirondak` / Adirondak Crab Apple		1.5" Cal.
Malus x `Royal Raindrops` / Royal Raindrops Crabapple		6` Ht.
Syringa reticulata `Ivory Silk` / Ivory Silk Japanese Tree Lilac		1.5" Cal.
LARGE SHRUB DECIDUOUS	15	
Cephalanthus occidentalis / Buttonbush		3` Ht.
Corylus americana / American Hazelnut		3` Ht.
Physocarpus opulifolius `Center Glow` / Center Glow Ninebark		3` Ht.
Sambucus nigra `Black Lace` / Black Lace Elderberry		3` Ht.
Syringa patula `Miss Kim` / Miss Kim Lilac		3` Ht.
Viburnum dentatum `Blue Muffin` / Southern Arrowwood		3` Ht.
LARGE SHRUB EVERGREEN	9	
Juniperus chinensis `Hetzii Glauca` / Hetzi Blue Juniper		2.5` Ht.
Juniperus chinensis `Hetzii` / Hetzi Juniper		4` Ht.
Juniperus chinensis `Mountbatten` / Chinese Juniper		4` Ht.
Juniperus chinensis `Old Gold` / Old Gold Juniper		2` Ht.
Juniperus chinensis `Pfitzeriana Glauca` / Blue Pfitzer Juniper		2.5` Ht.
Juniperus x `J.N Select Blue` / Star Power Juniper		4` Ht.
Pinus mugo pumilio / Dwarf Mugo Pine		2.5` Ht.
Thuja occidentalis `Holmstrup` / Holmstrup Cedar		4` Ht.
MEDIUM SHRUB DECIDUOUS	99	
Cornus stolonifera `Arctic Fire` / Arctic Fire Dogwood		2` Ht.
Hydrangea arborescens `Annabelle` / Annabelle Smooth Hydrangea		2` Ht.
Hydrangea paniculata `Vanilla Strawberry` / Vanilla Strawberry Panicled Hydrangea		2` Ht.
Rosa rugosa `Blanc de Coubert` / Blanc de Coubert Rugosa Rose		2` Ht.
Syringa meyeri `Palibin` / Dwarf Korean Lilac		2` Ht.
Viburnum carlesii / Korean Spice Viburnum		2` Ht.
Weigela florida `Wine & Roses` / Wine & Roses Weigela		2` Ht.
MEDIUM SHRUB EVERGREEN	39	
Juniperus chinensis `Ames` / Ames Juniper		5` Ht.
Juniperus chinensis `Old Gold` / Old Gold Juniper		2` Ht.
Juniperus chinensis `Sea Green` / Sea Green Juniper		2` Ht.
Juniperus squamata `Blue Star` / Blue Star Juniper		1.5` Ht.
Taxus x media `Densiformis` / Dense Yew		2` Ht.
Taxus x media `Tauntonii` / Tauton Yew		2` Ht.
Thuja occidentalis `Smaragd` / Emerald Green Arborvitae		5` Ht.
SMALL SHRUB DECIDUOUS	56	
Aronia melanocarpa `Low Scape Mound` / Low Scape Mound Chokeberry		2` Ht.
Diervilla lonicera / Dwarf Bush Honeysuckle		2` Ht.
Hydrangea paniculata `Bobo` / Bobo Hydrangea		2` Ht.
Hydrangea serrata `Tuff Stuff` / Tuff Stuff Hydrangea		2` Ht.
Hypericum kalmianum / Kalm St. Johnswort		2` Ht.
Spiraea betulifolia `Tor` / Birchleaf Spirea		2` Ht.
Spiraea japonica `Magic Carpet` / Magic Carpet Spirea		2` Ht.
Weigela florida `Dark Horse` / Weigela		2` Ht.
ORNAMENTAL GRASSES TALL	149	
Calamagrostis x acutiflora `Karl Foerster` / Feather Reed Grass		1 gal.
Miscanthus sinensis `Morning Light` / Eulalia Grass		1 gal.
Panicum virgatum `Northwind` / Switch Grass		1 gal.
ORNAMENTAL GRASS-SHORT	94	
Chasmanthium latifolium / Northern Sea Oats		1 gal.
Schizachyrium scoparium `Blue Heaven` / Blue Heaven Little Bluestem		1 gal.
Sporobolus heterolepis `Tara` / Prairie Dropseed		1 gal.
PERENNIAL	898 sf	
Allium x `Summer Beauty` / Summer Beauty Allium	34	4.5" Cont.
Coreopsis verticillata `Zagreb` / Zagreb Thread Leaf Coreopsis	24	4.5" Cont.
Echinacea purpurea `Magnus Superior` / Magnus Superior Coneflower	42	4.5" Cont.
Geranium x cantabrigiense `Biokovo Carmina` / Biokovo Carmina Cranesbill	24	4.5" Cont.
Geum x `Mai Tai` / Mai Tai Grecian Rose	69	4.5" Cont.
Hemerocallis x `Stella de Oro` / Stella de Oro Daylily	24	4.5" Cont.
Nepeta x faassenii `Novanepjun` / Junior Walker Catmint	24	4.5" Cont.
Rudbeckia fulgida speciosa `Viette`s Little Suzy` / Coneflower	42	4.5" Cont.
Salvia nemorosa `May Night` / May Night Sage	24	4.5" Cont.
Sedum x `Autumn Joy` / Autumn Joy Sedum	15	4.5" Cont.
TURF	25,715 sf	
Sod / Sod	4	sod
Turf Hydroseed / Drought Tolerant Fescue Blend	3,848,251	seed

PINNACLE ENGINEERING GROUP
ENGINEERING I NATURAL RESOURCES I SURVEYING
PLAN I DESIGN I DELIVER
www.pinnacle-engr.com

WISCONSIN OFFICE:
20725 WATERTOWN ROAD
BROOKFIELD, WI 53186
(262) 754-8888
CHICAGO I MILWAUKEE : NATIONWIDE

FRAME PARK COMMONS

WAUKESHA, WI

GENERAL NOTES

REVISIONS

PEG JOB No 1545.00-WI
PEG PM MAC
START DATE 08/20/2019
SCALE

SHEET L-7 L-7

© COPYRIGHT 2018

GENERAL NOTES

FOR REVIEW ONLY

www.pinnacle-engr.com

DRAFTED: JSJ DESIGNED: JSJ REVIEWED: DJB

THESE PLANS AND DESIGNS ARE COPYRIGHT PROTECTED AND MAY NOT BE USED IN WHOLE OR IN PART WITHOUT THE WRITTEN CONSENT OF PINNACLE ENGINEERING GROUP, LLC

Z:\PROJECTS\2018\1545.00-WI\CAD\SHEETS\1545.00-WI LANDSCAPE.DWG

ONSITE CIVIL ENGINEERING INFRASTRUCTURE PLANS
FOR

FRAME PARK COMMONS

WAUKESHA, WI

PLANS PREPARED FOR

BEAR DEVELOPMENT

PROJECT LOCATION

LOCATION MAP
SCALE: 1" = 200'

BENCHMARKS

REFERENCE BENCHMARK:

BENCHMARK 1= CONCRETE MONUMENT WITH BRASS CAP AT THE NORTHWEST CORNER OF THE SOUTHWEST ¼ SECTION 35,TOWN 7 NORTH, RANGE 19 EAST,

ELEVATION = 894.32 (NGVD29)
ELEVATION= 113.77 (CITY)

BEARINGS REFERENCED TO THE WISCONSIN STATE PLANE COORDINATE SYSTEM, SOUTH ZONE (N.A.D. 1927).

LEGEND

	EXISTING	PROPOSED
SANITARY SEWER MANHOLE		
STORM SEWER MANHOLE		
STORM SEWER CATCH BASIN (ROUND CASTING)		
STORM SEWER CATCH BASIN (RECTANGULAR CASTING)		
PRECAST FLARED END SECTION		
CONCRETE HEADWALL		
VALVE BOX		
FIRE HYDRANT		
CLEANOUT		
SANITARY SEWER		
FORCE MAIN		
STORM SEWER		
DRAIN TILE		
WATER MAIN	W	W
FIRE PROTECTION		FP
ELECTRICAL CABLE	E	E
OVERHEAD WIRES	OHW	OHW
GAS MAIN	G	G
TELEPHONE LINE	T	T
UTILITY CROSSING		
CAUTION EXISTING UTILITIES NEARBY		CAUTION
GRANULAR TRENCH BACKFILL		
LIGHTING		
ELECTRICAL TRANSFORMER OR PEDESTAL	TF	
POWER POLE		
POWER POLE WITH LIGHT		
GUY WIRE		
STREET SIGN		
CONTOUR	749	749
SPOT ELEVATION	×(750.00)	750.00
WETLANDS	WET	
PRIMARY ENVIRONMENTAL CORRIDOR	PEC	
FLOODWAY		
FLOODPLAIN		
HIGH WATER LEVEL (HWL)		
NORMAL WATER LEVEL (NWL)		
DIRECTION OF SURFACE FLOW		GRASS / PAVEMENT
DITCH OR SWALE		
DIVERSION SWALE		
OVERFLOW RELIEF ROUTING		
TREE WITH TRUNK SIZE	6"	
SOIL BORING	B-0	B-1
TOPSOIL PROBE	T-0	T-1
FENCE LINE, TEMPORARY SILT	SF	SF
FENCE LINE, WIRE		
FENCE LINE, CHAIN LINK OR IRON		
FENCE LINE, WOOD OR PLASTIC		
CONCRETE SIDEWALK		
CURB AND GUTTER		
DEPRESSED CURB		
REVERSE PITCH CURB & GUTTER		
EASEMENT LINE		

ABBREVIATIONS

BL	BASE LINE	NWL	NORMAL WATER LEVEL
	LONG CHORD OF CURVE	PC	POINT OF CURVATURE
C & G	CURB AND GUTTER	PT	POINT OF TANGENCY
CB	CATCH BASIN	PVI	POINT OF VERTICAL INTERSECTION
CL	CENTERLINE	R	RADIUS
	DEGREE OF CURVE	ROW	RIGHT-OF-WAY
EP	EDGE OF PAVEMENT	SAN	SANITARY SEWER
FF	FINISHED FLOOR	ST	STORM SEWER
FG	FINISHED GRADE	T	TANGENCY OF CURVE
FL	FLOW LINE	TB	TOP OF BANK
FP	FLOODPLAIN	TC	TOP OF CURB
FR	FRAME	TF	TOP OF FOUNDATION
FW	FLOODWAY	TP	TOP OF PIPE
HWL	HIGH WATER LEVEL	TS	TOP OF SIDEWALK
INV	INVERT	TW	TOP OF WALK
	LENGTH OF CURVE	WM	WATER MAIN
MH	MANHOLE	Δ	INTERSECTION ANGLE

GENERAL NOTES

1. THE INTENTION OF THE PLANS AND SPECIFICATIONS IS TO SET FORTH PERFORMANCE AND CONSTRUCTION MATERIAL STANDARDS FOR THE PROPER EXECUTION OF WORK. ALL WORKS CONTAINED WITHIN THE PLANS AND SPECIFICATIONS SHALL BE COMPLETED IN ACCORDANCE WITH ALL REQUIREMENTS FROM LOCAL, STATE, FEDERAL OR OTHER GOVERNING AGENCY'S LAWS, REGULATIONS, JURISDICTIONAL ORDINANCES/CODES/RULES/ETC., AND THE OWNER'S DIRECTION.
2. ALL SITE IMPROVEMENTS AND CONSTRUCTION SHOWN ON THE PLANS SHALL CONFORM TO THE CITY OF WAUKESHA DEVELOPMENT HANDBOOK & INFRASTRUCTURE SPECIFICATIONS. WHERE THE PLANS DO NOT COMPLY, IT SHALL BE THE SOLE RESPONSIBILITY AND EXPENSE OF THE DEVELOPER TO MAKE REVISIONS TO THE PLANS AND/OR CONSTRUCTED INFRASTRUCTURE TO COMPLY.
3. A GEOTECHNICAL REPORT HAS NOT BEEN PREPARED FOR THE PROJECT SITE. THE DATA ON SUB-SURFACE SOIL CONDITIONS IS NOT INTENDED AS A REPRESENTATION OR WARRANTY OF THE CONTINUITY OF SUCH CONDITIONS BETWEEN BORINGS OR INDICATED SAMPLING LOCATIONS. IT SHALL BE EXPRESSLY UNDERSTOOD THAT OWNER WILL NOT BE RESPONSIBLE FOR ANY INTERPRETATIONS OR CONCLUSIONS DRAWN THERE FROM BY THE CONTRACTOR. DATA IS MADE AVAILABLE FOR THE CONVENIENCE OF THE CONTRACTOR. THE CONTRACTOR IS RESPONSIBLE FOR PERFORMING ANY ADDITIONAL SOILS INVESTIGATIONS THEY FEEL IS NECESSARY FOR THE PROPER EVALUATION OF THE SITE FOR PURPOSES OF PLANNING, BIDDING, OR CONSTRUCTING THE PROJECT AT NO ADDITIONAL COST TO THE OWNER.
4. THE CONTRACTOR IS RESPONSIBLE TO REVIEW AND UNDERSTAND ALL COMPONENTS OF THE PLANS AND SPECIFICATIONS, INCLUDING FIELD VERIFYING SOIL CONDITIONS, PRIOR TO SUBMISSION OF A BID PROPOSAL.
5. THE CONTRACTOR SHALL PROMPTLY REPORT ANY ERRORS OR AMBIGUITIES LEARNED AS PART OF THEIR REVIEW OF PLANS, SPECIFICATIONS, REPORTS AND FIELD INVESTIGATIONS.
6. THE CONTRACTOR IS SOLELY RESPONSIBLE FOR THE COMPUTATION OF QUANTITIES AND WORK REQUIRED TO COMPLETE THIS PROJECT. THE CONTRACTOR'S BID SHALL BE BASED ON ITS OWN COMPUTATIONS AND IN NO SUCH INSTANCE RELY ON THE ENGINEER'S ESTIMATE.
7. QUESTIONS/CLARIFICATIONS WILL BE INTERPRETED BY ENGINEER/OWNER PRIOR TO THE AWARD OF CONTRACT. ENGINEER/OWNER WILL SUBMIT OFFICIAL RESPONSES IN WRITING. INTERPRETATIONS PRESENTED IN OFFICIAL RESPONSES SHALL BE BINDING ON ALL PARTIES ASSOCIATED WITH THE CONTRACT. IN NO WAY SHALL WORD-OF-MOUTH DIALOG CONSTITUTE AN OFFICIAL RESPONSE.
8. PRIOR TO START OF WORK, CONTRACTOR SHALL BE COMPLETELY FAMILIAR WITH ALL CONDITIONS OF THE SITE, AND SHALL ACCOUNT FOR CONDITIONS THAT AFFECT, OR MAY AFFECT CONSTRUCTION INCLUDING, BUT NOT LIMITED TO, LIMITATIONS OF WORK ACCESS, SPACE LIMITATIONS, OVERHEAD OBSTRUCTIONS, TRAFFIC PATTERNS, LOCAL REQUIREMENTS, ADJACENT ACTIVITIES, ETC. FAILURE TO CONSIDER SITE CONDITIONS SHALL NOT BE CAUSE FOR CLAIM OF JOB EXTRAS.
9. COMMENCEMENT OF CONSTRUCTION SHALL EXPLICITLY CONFIRM THAT THE CONTRACTOR HAS REVIEWED THE PLANS AND SPECIFICATIONS IN ENTIRETY AND CERTIFIES THAT THEIR SUBMITTED BID PROPOSAL CONTAINS PROVISIONS TO COMPLETE THE PROJECT, WITH THE EXCEPTION OF UNFORESEEN FIELD CONDITIONS; ALL APPLICABLE PERMITS HAVE BEEN OBTAINED; AND CONTRACTOR UNDERSTANDS ALL OF THE REQUIREMENTS OF THE PROJECT.
10. SHOULD ANY DISCREPANCIES OR CONFLICTS IN THE PLANS OR SPECIFICATIONS BE DISCOVERED AFTER THE AWARD OF CONTRACT, ENGINEER SHALL BE NOTIFIED IN WRITING IMMEDIATELY AND CONSTRUCTION OF ITEMS AFFECTED BY THE DISCREPANCIES/CONFLICTS SHALL NOT COMMENCE, OR CONTINUE, UNTIL A WRITTEN RESPONSE FROM ENGINEER/OWNER IS DISTRIBUTED. IN THE EVENT OF A CONFLICT BETWEEN REFERENCED CODES, STANDARDS, SPECIFICATIONS AND PLANS, THE ONE ESTABLISHING THE MOST STRINGENT REQUIREMENTS SHALL BE FOLLOWED.
11. THE CONTRACTOR SHALL, AT ITS OWN EXPENSE, OBTAIN ALL NECESSARY PERMITS AND LICENSES TO COMPLETE THE PROJECT. OBTAINING PERMITS, OR DELAYS, IS NOT CAUSE FOR DELAY OF THE CONTRACT OR SCHEDULE. CONTRACTOR SHALL COMPLY WITH ALL PERMIT REQUIREMENTS.
12. THE CONTRACTOR SHALL NOTIFY ALL INTERESTED GOVERNING AGENCIES, UTILITY COMPANIES AFFECTED BY THIS CONSTRUCTION PROJECT, AND DIGGER'S HOTLINE IN ADVANCE OF CONSTRUCTION TO COMPLY WITH ALL JURISDICTIONAL ORDINANCES/CODES/RULES/ETC., PERMIT STIPULATIONS, AND OTHER APPLICABLE STANDARDS.
13. SAFETY IS THE SOLE RESPONSIBILITY OF THE CONTRACTOR. THE CONTRACTOR SHALL BE RESPONSIBLE TO INITIATE, INSTITUTE, ENFORCE, MAINTAIN, AND SUPERVISE ALL SAFETY PRECAUTIONS AND JOB SITE SAFETY PROGRAMS IN CONNECTION WITH THE WORK.
14. CONTRACTOR SHALL KEEP THE JOBSITE CLEAN AND ORDERLY AT ALL TIMES. ALL LOCATIONS OF THE SITE SHALL BE KEPT IN A WORKING MANNER SUCH THAT DEBRIS IS REMOVED CONTINUOUSLY AND ALL RESPECTIVE CONTRACTORS OPERATE UNDER GENERAL "GOOD HOUSEKEEPING."
15. THE CONTRACTOR SHALL INDEMNIFY THE OWNER, ENGINEER, AND THEIR AGENTS FROM ALL LIABILITY INVOLVED WITH THE CONSTRUCTION, INSTALLATION, AND TESTING OF THE WORK ON THIS PROJECT.

INDEX OF SHEETS

C-1	COVER SHEET
C-2	EXISTING CONDITIONS
C-3	DEMOLITION PLAN
C-4	SITE DIMENSION & PAVING PLAN
C-5	GRADING PLAN
C-6	UTILITY PLAN
C-7	SITE STABILIZATION PLAN
C-8 - C-11	CONSTRUCTION DETAILS
L-1 - L-7	OVERALL LANDSCAPE PLAN

CONTACTS:

CIVIL ENGINEER:
MATT CAREY, P.E.
PINNACLE ENGINEERING GROUP
20725 WATERTOWN ROAD, SUITE 100
BROOKFIELD, WI 53186
(262) 754-8888

SURVEYOR:
JOHN P. KONOPACKI, P.L.S.
PINNACLE ENGINEERING GROUP
20725 WATERTOWN ROAD, SUITE 100
BROOKFIELD, WI 53186
(262) 754-8888

OWNER:
SARAH BECK
BEAR DEVELOPMENT, LLC
4011 80th STREET
KENOSHA, WI 53142
(618)558-1987
EMAIL: sbeck@beardevelopment.com

GOVERNING AGENCY CONTACTS:

ALEX DAMIEN
CITY ENGINEER
CITY OF WAUKESHA
(262)524-3907
adamien@waukesha-wi.gov

JEFF FORTIN
SENIOR PLANNER
CITY OF WAUKESHA
(262)524-3750
jfortin@waukesha-wi.gov

DAVE BUECHL
ENGINEER
CITY OF WAUKESHA
(262)524-3582
dbuechl@waukesha-wi.gov

CHARLIE GRIFFITH
ASSOCIATE PLANNER
CITY OF WAUKESHA
(262)524-3529
cgriffith@waukesha-wi.gov

THOMAS MILES
ENGINEER
CITY OF WAUKESHA
tmiles@waukesha-wi.gov

DIGGERS HOTLINE
Toll Free (800) 242-8511
Milwaukee Area (414) 259-1181
Hearing Impaired TDD (800) 542-2289
www.DiggersHotline.com

EXPIRATION DATE: JULY 31, 2020

PINNACLE ENGINEERING GROUP, LLC - ENGINEER'S LIMITATION

PINNACLE ENGINEERING GROUP, LLC AND THEIR CONSULTANTS DO NOT WARRANT OR GUARANTEE THE ACCURACY AND COMPLETENESS OF THE DELIVERABLES HEREIN BEYOND A REASONABLE DILIGENCE. IF ANY MISTAKES, OMISSIONS, OR DISCREPANCIES ARE FOUND TO EXIST WITHIN THE DELIVERABLES, THE ENGINEER SHALL BE PROMPTLY NOTIFIED PRIOR TO BID SO THAT HE MAY HAVE THE OPPORTUNITY TO TAKE WHATEVER STEPS NECESSARY TO RESOLVE THEM. FAILURE TO PROMPTLY NOTIFY THE ENGINEER OF SUCH CONDITIONS SHALL ABSOLVE THE ENGINEER FROM ANY RESPONSIBILITY FOR THE CONSEQUENCES OF SUCH FAILURE. ACTIONS TAKEN WITHOUT THE KNOWLEDGE AND CONSENT TO THE ENGINEER, OR IN CONTRADICTION TO THE ENGINEER'S DELIVERABLES OR RECOMMENDATIONS, SHALL BECOME THE RESPONSIBILITY NOT OF THE ENGINEER BUT OF THE PARTIES RESPONSIBLE FOR TAKING SUCH ACTION.

FURTHERMORE, PINNACLE ENGINEERING GROUP, LLC IS NOT RESPONSIBLE FOR CONSTRUCTION SAFETY OR THE MEANS AND METHODS OF CONSTRUCTION.

FOR REVIEW ONLY

© COPYRIGHT 2018
THESE PLANS AND DESIGNS ARE COPYRIGHT PROTECTED AND MAY NOT BE USED IN WHOLE OR IN PART WITHOUT THE WRITTEN CONSENT OF PINNACLE ENGINEERING GROUP, LLC

REVIEWED: MAC
DESIGNED: DO
DRAFTED: JIG

COVER SHEET

www.pinnacle-engr.com

Z:\PROJECTS\2018\1545.00-WI\CAD\SHEETS\1545.00-WI COVERSHEET.DWG

THESE PLANS AND DESIGNS ARE COPYRIGHT PROTECTED AND MAY NOT BE USED IN WHOLE OR IN PART, WITHOUT THE WRITTEN CONSENT OF PINNACLE ENGINEERING GROUP, LLC

DRAFTED: JG DESIGNED: DD REVIEWED: MAC

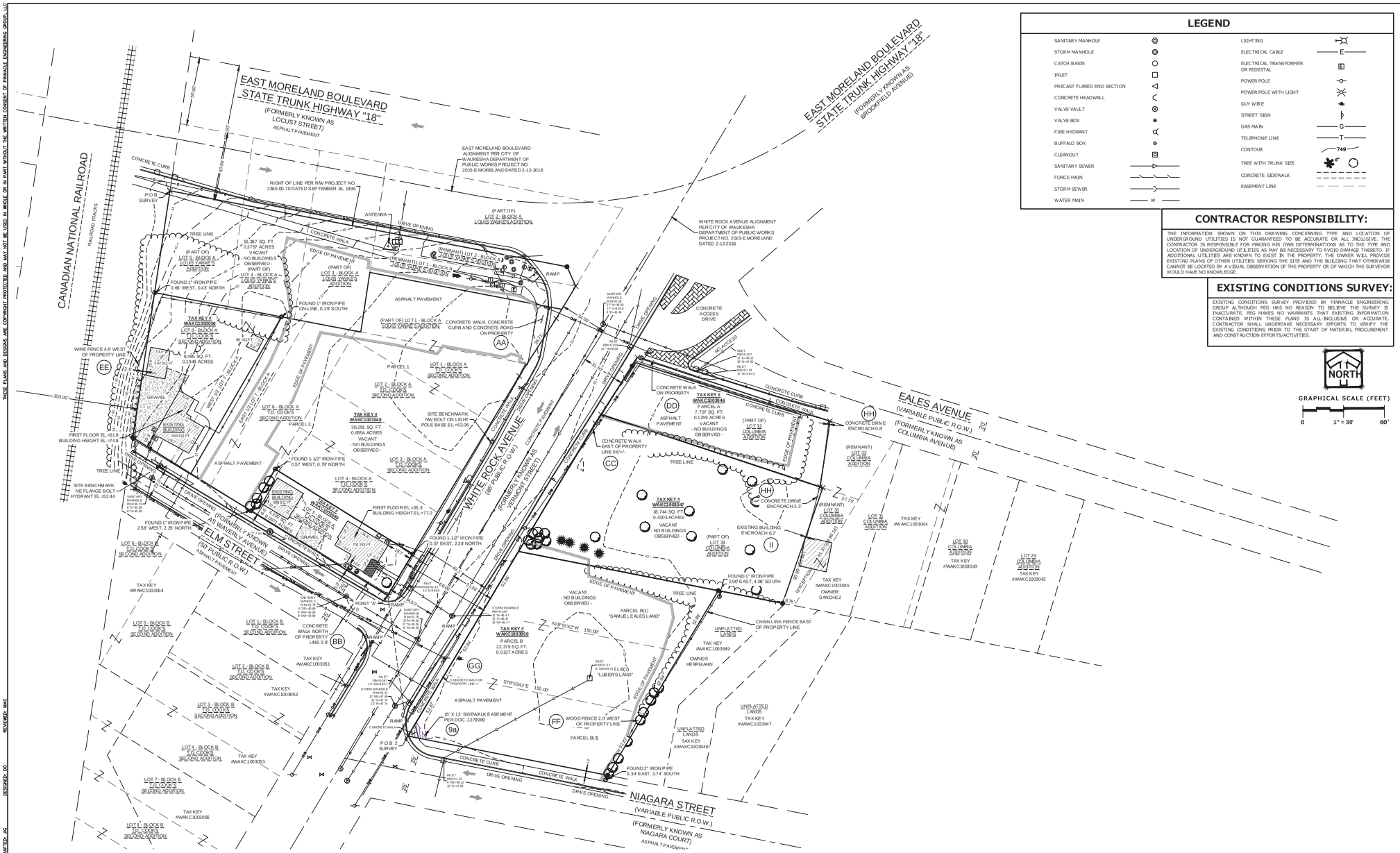

LEGEND

SANITARY MANHOLE		LIGHTING	
STORM MANHOLE		ELECTRICAL CABLE	E
CATCH BASIN		ELECTRICAL TRANSFORMER OR PEDESTAL	
INLET		POWER POLE	
PRECAST FLARED END SECTION		POWER POLE WITH LIGHT	
CONCRETE HEADWALL		GUY WIRE	
VALVE VAULT		STREET SIGN	
VALVE BOX		GAS MAIN	G
FIRE HYDRANT		TELEPHONE LINE	T
BUFFALO BOX		CONTOUR	749
CLEANOUT		TREE WITH TRUNK SIZE	6"
SANITARY SEWER		CONCRETE SIDEWALK	
FORCE MAIN		EASEMENT LINE	
STORM SEWER			
WATER MAIN	W		

CONTRACTOR RESPONSIBILITY:

THE INFORMATION SHOWN ON THIS DRAWING CONCERNING TYPE AND LOCATION OF UNDERGROUND UTILITIES IS NOT GUARANTEED TO BE ACCURATE OR ALL INCLUSIVE. THE CONTRACTOR IS RESPONSIBLE FOR MAKING HIS OWN DETERMINATIONS AS TO THE TYPE AND LOCATION OF UNDERGROUND UTILITIES AS MAY BE NECESSARY TO AVOID DAMAGE THERETO. IF ADDITIONAL UTILITIES ARE KNOWN TO EXIST IN THE PROPERTY, THE OWNER WILL PROVIDE EXISTING PLANS OF OTHER UTILITIES SERVING THE SITE AND THE BUILDING THAT OTHERWISE CANNOT BE LOCATED BY A VISUAL OBSERVATION OF THE PROPERTY OR OF WHICH THE SURVEYOR WOULD HAVE NO KNOWLEDGE.

EXISTING CONDITIONS SURVEY:

EXISTING CONDITIONS SURVEY PROVIDED BY PINNACLE ENGINEERING GROUP ALTHOUGH PEG HAS NO REASON TO BELIEVE THE SURVEY IS INACCURATE, PEG MAKES NO WARRANTS THAT EXISTING INFORMATION CONTAINED WITHIN THESE PLANS IS ALL-INCLUSIVE OR ACCURATE. CONTRACTOR SHALL UNDERTAKE NECESSARY EFFORTS TO VERIFY THE EXISTING CONDITIONS PRIOR TO THE START OF MATERIAL PROCUREMENT AND CONSTRUCTION EFFORTS/ACTIVITIES.

NORTH

GRAPHICAL SCALE (FEET)

0 1" = 30' 60'

PLAN | DESIGN | DELIVER
www.pinnacle-engr.com
PINNACLE ENGINEERING GROUP
ENGINEERING | NATURAL RESOURCES | SURVEYING
WISCONSIN OFFICE:
20725 WATERTOWN ROAD
BROOKFIELD, WI 53186
(262) 754-8888
CHICAGO | MILWAUKEE | NATIONWIDE

FRAME PARK COMMONS

WAUKESHA, WI

EXISTING CONDITIONS

REVISIONS

PEG JOB No. 15-45.00-WI
PEG PM MAC
START DATE 01/20/2015
SCALE

SHEET
C-2
C-11

www.pinnacle-engr.com

FOR REVIEW ONLY

EXISTING CONDITIONS

Z:\PROJECTS\2018\1545.00-WI\CAD\SHEETS\15-45.00-WI EXISTING CONDITIONS.DWG

THESE PLANS AND DESIGNS ARE COPYRIGHT PROTECTED AND MAY NOT BE USED IN WHOLE OR IN PART, WITHOUT THE WRITTEN CONSENT OF PINNACLE ENGINEERING GROUP, LLC

DRAFTED: JJO DESIGNED: DJO REVIEWED: MAC

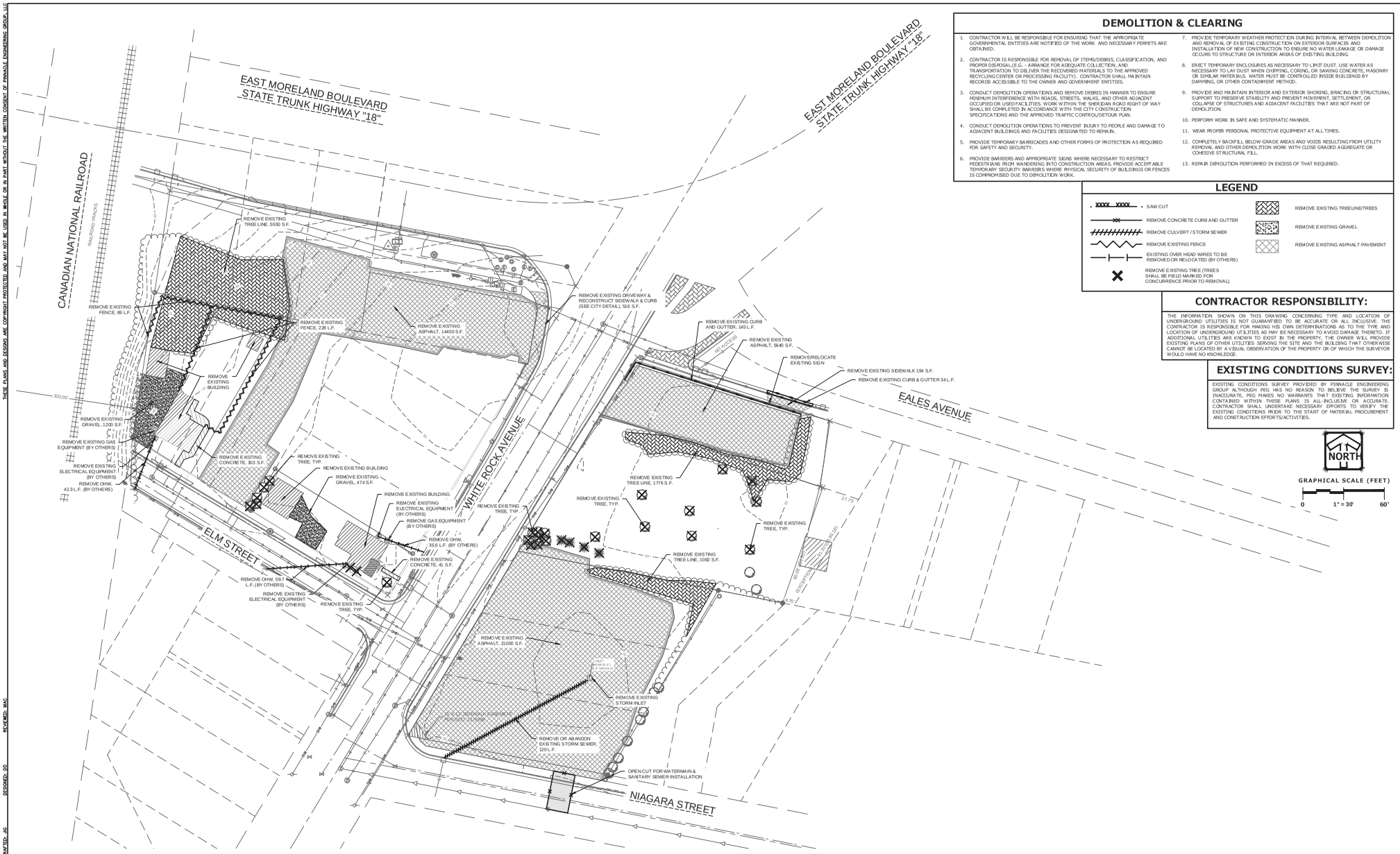

DEMOLITION & CLEARING

1. CONTRACTOR WILL BE RESPONSIBLE FOR ENSURING THAT THE APPROPRIATE GOVERNMENTAL ENTITIES ARE NOTIFIED OF THE WORK AND NECESSARY PERMITS ARE OBTAINED.
2. CONTRACTOR IS RESPONSIBLE FOR REMOVAL OF ITEMS/DEBRIS, CLASSIFICATION, AND PROPER DISPOSAL.(E.G. - ARRANGE FOR ADEQUATE COLLECTION, AND TRANSPORTATION TO DELIVER THE RECOVERED MATERIALS TO THE APPROVED RECYCLING CENTER OR PROCESSING FACILITY). CONTRACTOR SHALL MAINTAIN RECORDS ACCESSIBLE TO THE OWNER AND GOVERNMENT ENTITIES.
3. CONDUCT DEMOLITION OPERATIONS AND REMOVE DEBRIS IN MANNER TO ENSURE MINIMUM INTERFERENCE WITH ROADS, STREETS, WALKS, AND OTHER ADJACENT OCCUPIED OR USED FACILITIES. WORK WITHIN THE SHERIDAN ROAD RIGHT OF WAY SHALL BE COMPLETED IN ACCORDANCE WITH THE CITY CONSTRUCTION SPECIFICATIONS AND THE APPROVED TRAFFIC CONTROL/DETOUR PLAN.
4. CONDUCT DEMOLITION OPERATIONS TO PREVENT INJURY TO PEOPLE AND DAMAGE TO ADJACENT BUILDINGS AND FACILITIES DESIGNATED TO REMAIN.
5. PROVIDE TEMPORARY BARRICADES AND OTHER FORMS OF PROTECTION AS REQUIRED FOR SAFETY AND SECURITY.
6. PROVIDE BARRIERS AND APPROPRIATE SIGNS WHERE NECESSARY TO RESTRICT PEDESTRIANS FROM WANDERING INTO CONSTRUCTION AREAS. PROVIDE ACCEPTABLE TEMPORARY SECURITY BARRIERS WHERE PHYSICAL SECURITY OF BUILDINGS OR FENCES IS COMPROMISED DUE TO DEMOLITION WORK.
7. PROVIDE TEMPORARY WEATHER PROTECTION DURING INTERVAL BETWEEN DEMOLITION AND REMOVAL OF EXISTING CONSTRUCTION ON EXTERIOR SURFACES AND INSTALLATION OF NEW CONSTRUCTION TO ENSURE NO WATER LEAKAGE OR DAMAGE OCCURS TO STRUCTURE OR INTERIOR AREAS OF EXISTING BUILDING.
8. ERECT TEMPORARY ENCLOSURES AS NECESSARY TO LIMIT DUST. USE WATER AS NECESSARY TO LAY DUST WHEN CHIPPING, CORING, OR SAWING CONCRETE, MASONRY OR SIMILAR MATERIALS. WATER MUST BE CONTROLLED INSIDE BUILDINGS BY DAMMING, OR OTHER CONTAINMENT METHOD.
9. PROVIDE AND MAINTAIN INTERIOR AND EXTERIOR SHORING, BRACING OR STRUCTURAL SUPPORT TO PRESERVE STABILITY AND PREVENT MOVEMENT, SETTLEMENT, OR COLLAPSE OF STRUCTURES AND ADJACENT FACILITIES THAT ARE NOT PART OF DEMOLITION.
10. PERFORM WORK IN SAFE AND SYSTEMATIC MANNER.
11. WEAR PROPER PERSONAL PROTECTIVE EQUIPMENT AT ALL TIMES.
12. COMPLETELY BACKFILL BELOW-GRADE AREAS AND VOIDS RESULTING FROM UTILITY REMOVAL AND OTHER DEMOLITION WORK WITH CLOSE GRADED AGGREGATE OR COHESIVE STRUCTURAL FILL.
13. REPAIR DEMOLITION PERFORMED IN EXCESS OF THAT REQUIRED.

LEGEND

- SAW CUT
- REMOVE CONCRETE CURB AND GUTTER
- REMOVE CULVERT / STORM SEWER
- REMOVE EXISTING FENCE
- EXISTING OVER HEAD WIRES TO BE REMOVED OR RELOCATED (BY OTHERS)
- REMOVE EXISTING TREE (TREES SHALL BE FIELD MARKED FOR CONCURRENCE PRIOR TO REMOVAL)
- REMOVE EXISTING TREELINE/TREES
- REMOVE EXISTING GRAVEL
- REMOVE EXISTING ASPHALT PAVEMENT

CONTRACTOR RESPONSIBILITY:

THE INFORMATION SHOWN ON THIS DRAWING CONCERNING TYPE AND LOCATION OF UNDERGROUND UTILITIES IS NOT GUARANTEED TO BE ACCURATE OR ALL INCLUSIVE. THE CONTRACTOR IS RESPONSIBLE FOR MAKING HIS OWN DETERMINATIONS AS TO THE TYPE AND LOCATION OF UNDERGROUND UTILITIES AS MAY BE NECESSARY TO AVOID DAMAGE THERETO. IF ADDITIONAL UTILITIES ARE KNOWN TO EXIST IN THE PROPERTY, THE OWNER WILL PROVIDE EXISTING PLANS OF OTHER UTILITIES SERVING THE SITE AND THE BUILDING THAT OTHERWISE CANNOT BE LOCATED BY A VISUAL OBSERVATION OF THE PROPERTY OR OF WHICH THE SURVEYOR WOULD HAVE NO KNOWLEDGE.

EXISTING CONDITIONS SURVEY:

EXISTING CONDITIONS SURVEY PROVIDED BY PINNACLE ENGINEERING GROUP ALTHOUGH PEG HAS NO REASON TO BELIEVE THE SURVEY IS INACCURATE, PEG MAKES NO WARRANTS THAT EXISTING INFORMATION CONTAINED WITHIN THESE PLANS IS ALL-INCLUSIVE OR ACCURATE. CONTRACTOR SHALL UNDERTAKE NECESSARY EFFORTS TO VERIFY THE EXISTING CONDITIONS PRIOR TO THE START OF MATERIAL PROCUREMENT AND CONSTRUCTION EFFORTS/ACTIVITIES.

NORTH

GRAPHICAL SCALE (FEET)

0 1" = 30' 60'

www.pinnacle-engr.com

FOR REVIEW ONLY

DEMOLITION PLAN

PLAN | DESIGN | DELIVER
www.pinnacle-engr.com
PINNACLE ENGINEERING GROUP
ENGINEERING | NATURAL RESOURCES | SURVEYING
WISCONSIN OFFICE:
20725 WATERTOWN ROAD
BROOKFIELD, WI 53186
(262) 754-8888
CHICAGO | MILWAUKEE | NATIONWIDE

FRAME PARK COMMONS

WAUKESHA, WI

DEMOLITION PLAN

REVISIONS

PEG JOB No. 15-45.00-WI
PEG PM MAC
START DATE 08/20/2018
SCALE

SHEET
C-3
C-11

DEMOLITION PLAN

Z:\PROJECTS\2018\1545.00-WI\CAD\SHEETS\15-45.00-WI DEMOLITION PLAN.DWG

THESE PLANS AND DESIGNS ARE COPYRIGHT PROTECTED AND MAY NOT BE USED IN WHOLE OR IN PART, WITHOUT THE WRITTEN CONSENT OF PINNACLE ENGINEERING GROUP, LLC

LEGEND

- **LIGHT DUTY PAVEMENT**
  - 4" CRUSHED AGGREGATE BASE COURSE (1-1/4" DENSE GRADED LIMESTONE)
  - 4" ASPHALTIC CONC. (2.0 PTS)
    - LOWER LAYER (X.X", X XX XX-X X S)
    - UPPER LAYER (X.X", X XX XX-XX S)
- **HEAVY DUTY PAVEMENT**
  - 4" CRUSHED AGGREGATE BASE COURSE (1-1/4" DENSE GRADED LIMESTONE)
  - 4" ASPHALTIC CONC. (2.0 PTS)
    - LOWER LAYER (X.X", X XX XX-X X S)
    - UPPER LAYER (X.X", X XX XX-XX H)
- **CONCRETE SIDEWALK**
  - 4" CRUSHED AGGREGATE BASE COURSE (1-1/4" DENSE GRADED LIMESTONE)
  - 5" PCC (6x6 WELDED WIRE FABRIC PER WAC 315-92)
- **CONCRETE PAVEMENT**
  - 4" CRUSHED AGGREGATE BASE COURSE (1-1/4" DENSE GRADED LIMESTONE)
  - 6" PCC (6x6 WELDED WIRE FABRIC PER WAC 315-92)
- (A) **4" SOLID WHITE STRIPE**
- (B) **4" DIAGONAL AT 45° SPACED 2' O.C.**
- (C) **R7-8 HANDICAP PARKING SIGN (SEE DETAIL)**
- (D) **18" CURB & GUTTER (SEE DETAIL)**
- (E) **18" REVERSE CURB & GUTTER (SEE DETAIL)**
- (F) **TAPER CURB HEAD (SEE DETAIL)**
- (G) **BUILDING DOOR SLAB (2% MAX SLOPE WITHIN DRIVE IN OR MAN DOOR)**
- (H) **6" INTEGRAL CURB WALK (SEE DETAIL)**
- (X) **PARKING COUNT (FOR INFORMATION ONLY, NOT TO BE PAINTED)**
- **MAN DOOR**
- **OVERHEAD DOOR**

EXISTING CONDITIONS SURVEY:

EXISTING CONDITIONS SURVEY PROVIDED BY PINNACLE ENGINEERING GROUP ALTHOUGH PEG HAS NO REASON TO BELIEVE THE SURVEY IS INACCURATE, PEG MAKES NO WARRANTS THAT EXISTING INFORMATION CONTAINED WITHIN THESE PLANS IS ALL-INCLUSIVE OR ACCURATE. CONTRACTOR SHALL UNDERTAKE NECESSARY EFFORTS TO VERIFY THE EXISTING CONDITIONS PRIOR TO THE START OF MATERIAL PROCUREMENT AND CONSTRUCTION EFFORTS/ACTIVITIES.

NORTH

GRAPHICAL SCALE (FEET)

0 1" = 30' 60'

NOTES

1. ALL DIMENSIONS ARE FACE OF CURB TO FACE OF CURB OR BUILDING FOUNDATION UNLESS NOTED OTHERWISE. ALL UTILITY DIMENSIONS ARE TO OUTSIDE OF PIPE OR CENTER OF STRUCTURE UNLESS OTHERWISE NOTED. ALL PAVING DIMENSIONS ARE TO FACE OF CURB OR TO EDGE OF PAVEMENT; EXCEPT FOR THE SETBACK FROM PARKING LOTS, MANEUVERING LANES AND FIRE ACCESS LANES, WHERE THE SETBACK IS MEASURED FROM THE BACK OF CURB TO THE PROPERTY LINE.
2. ALL PROPOSED CURB AND GUTTER SHALL BE 18" STANDARD CURB AND GUTTER (SEE DETAIL). UNLESS OTHERWISE NOTED. CURB AND GUTTER DRAINING AWAY FROM THE FACE OF CURB IS NOTED AS REVERSE CURB AND GUTTER.
3. ALL RADII ARE MEASURED TO FACE OF CURB UNLESS NOTED OTHERWISE.
4. BUILDING DIMENSIONS AND ADJACENT PARKING AND UTILITY LAYOUT HAVE BEEN PREPARED BASED UPON ARCHITECTURAL INFORMATION CURRENT AT THE DATE OF THIS DRAWING. SUBSEQUENT ARCHITECTURAL CHANGES MAY EXIST. THEREFORE CONTRACTOR SHALL REFER TO ARCHITECTURAL PLANS FOR PRECISE BUILDING DIMENSIONS AND EXACT UTILITY ENTRANCE LOCATIONS AND NOTIFY THE ARCHITECT AND ENGINEER OF ANY DISCREPANCIES PRIOR TO CONSTRUCTION.
5. THE CONTRACTOR SHALL CONTACT DIGGERS HOTLINE (1-800-242-8511) PRIOR TO ANY WORK TO LOCATE UTILITIES AND SHALL CONTACT THE OWNER SHOULD UTILITIES APPEAR TO BE IN CONFLICT WITH THE PROPOSED IMPROVEMENT.
6. IMPROVEMENTS ADJACENT TO BUILDING IF SHOWN SUCH AS TRUCK DOCK, RETAINING WALLS, SIDEWALKS, CURBING, FENCES, CANOPIES, RAMPS, HANDICAP ACCESS, PLANTERS, DUMPSTERS, AND TRANSFORMERS ETC. HAVE BEEN SHOWN FOR APPROXIMATE LOCATION ONLY. REFER TO ARCHITECTURAL PLANS FOR EXACT LOCATIONS, SPECIFICATIONS, AND DETAILS.
7. REFER TO ELECTRICAL PLANS FOR LIGHTING LOCATIONS, SPECIFICATIONS, AND DETAILS.
8. SEE ADDITIONAL NOTES AND DETAILS ON SITE DIMENSIONAL PLANS AND CONSTRUCTION DETAILS.
9. ALL PAVING SHALL CONFORM TO STATE OF WISCONSIN STANDARD SPECIFICATIONS FOR HIGHWAY & STRUCTURE CONSTRUCTION AND APPLICABLE CITY OF WAUKESHA ORDINANCES, AND SPECIFICATIONS CONTAINED WITHIN THIS PLAN SET.
10. CONTRACTOR SHALL CONSULT STRIPING COLOR WITH OWNER PRIOR TO CONSTRUCTION.
11. PROVIDE CONTRACTOR GRADE ACRYLIC, STRIPING PAINT FOR NEW ASPHALT OR COATED ASPHALT. APPLY MARKING PAINT AT A RATE OF ONE (1) GALLON PER THREE TO FOUR HUNDRED (300-400) LINEAL FEET OF FOUR (4) INCH WIDE STRIPES OR TO MANUFACTURER'S SPECIFICATION, WHICHEVER IS GREATER.
12. THOROUGHLY CLEAN SURFACES FREE OF DIRT, SAND, GRAVEL, OIL AND OTHER FOREIGN MATTER. CONTRACTOR RESPONSIBLE TO INSPECT EXISTING PAVEMENT SURFACES FOR CONDITIONS AND DEFECTS THAT WILL ADVERSELY AFFECT QUALITY OF WORK, AND WHICH CANNOT BE PUT INTO AN ACCEPTABLE CONDITION THROUGH NORMAL PREPARATORY WORK AS SPECIFIED.
13. DO NOT PLACE MARKING OVER UNSOUND PAVEMENTS. IF THESE CONDITIONS EXIST, NOTIFY OWNER. STARTING INSTALLATION CONSTITUTES CONTRACTOR'S ACCEPTANCE OF SURFACE AS SUITABLE FOR INSTALLATION.
14. LAYOUT MARKINGS USING GUIDE LINES, TEMPLATES AND FORMS. STENCILS AND TEMPLATES SHALL BE PROFESSIONALLY MADE TO INDUSTRY STANDARDS. "FREE HAND" PAINTING OF ARROWS, SYMBOLS, OR WORDING SHALL NOT BE ALLOWED. APPLY STRIPES STRAIGHT AND EVEN.
15. PROTECT ADJACENT CURBS, WALKS, FENCES, AND OTHER ITEMS FROM RECEIVING PAINT.
16. BARRICADE MARKED AREAS DURING INSTALLATION AND UNTIL THE MARKING PAINT IS DRIED AND READY FOR TRAFFIC.
17. ASPHALTIC CONCRETE PAVING SPECIFICATIONS-

CODES AND STANDARDS: THE PLACING, CONSTRUCTION AND COMPOSITION OF THE ASPHALTIC BASE COURSE AND ASPHALTIC CONCRETE SURFACING SHALL BE IN ACCORDANCE WITH THE REQUIREMENTS OF SECTIONS 450, 455, 460 AND 465 OF THE STATE OF WISCONSIN STANDARD SPECIFICATIONS FOR HIGHWAY AND STRUCTURE CONSTRUCTION, EDITION OF 2005. HEREAFTER, THIS PUBLICATION WILL BE REFERRED TO AS THE STATE HIGHWAY SPECIFICATIONS.

WEATHER LIMITATIONS: APPLY TACK COATS WHEN AMBIENT TEMPERATURE IS ABOVE 50° F (10° C) AND WHEN TEMPERATURE HAS NOT BEEN BELOW 35° F (1° C) FOR 12 HOURS IMMEDIATELY PRIOR TO APPLICATION. DO NOT APPLY WHEN BASE IS WET OR CONTAINS EXCESS OF MOISTURE. CONSTRUCT ASPHALTIC CONCRETE SURFACE COURSE WHEN ATMOSPHERIC TEMPERATURE IS ABOVE 40° (4°C) AND WHEN BASE IS DRY AND WHEN WEATHER IS NOT RAINY. BASE COURSE MAY BE PLACED WHEN AIR TEMPERATURE IS ABOVE 30° F (-1° C).

GRADE CONTROL: ESTABLISH AND MAINTAIN REQUIRED LINES AND ELEVATIONS FOR EACH COURSE DURING CONSTRUCTION.

CRUSHED AGGREGATE BASE COURSE: THE TOP LAYER OF BASE COURSE SHALL CONFORM TO SECTIONS 301 AND 305, STATE HIGHWAY SPECIFICATIONS.

BINDER COURSE AGGREGATE: THE AGGREGATE FOR THE BINDER COURSE HALL CONFORM TO SECTIONS 460.2.7 AND 315, STATE HIGHWAY SPECIFICATIONS.

SURFACE COURSE AGGREGATE: THE AGGREGATE FOR THE SURFACE COURSE SHALL CONFORM TO SECTIONS 460.2.7 AND 465, STATE HIGHWAY SPECIFICATIONS.

ASPHALTIC MATERIALS: THE ASPHALTIC MATERIALS SHALL CONFORM TO SECTION 455 AND 460, STATE HIGHWAY SPECIFICATIONS.

SURFACE PREPARATION: NOTIFY CONTRACTOR OF UNSATISFACTORY CONDITIONS. DO NOT BEGIN PAVING WORK UNTIL DEFICIENT SUBBASE AREAS HAVE BEEN CORRECTED AND ARE READY TO RECEIVE PAVING.

SITE DATA TABLE (WEST LOT)

PROPOSED LOT AREA:	1.23 AC	
NUMBER OF SURFACE PARKING SPACES: (ADA ACCESSIBLE SPACES: 2)	58	
NUMBER OF GARAGE PARKING SPACES: (ADA ACCESSIBLE SPACES: 2)	42	
BUILDING AREA:	18,273 SF	(0.42 AC)
IMPERVIOUS AREA:	22,697 SF	(0.52 AC)
GREEN SPACE AREA:	12,688 SF	(0.29 AC)
ZONING: MULTIPLE-FAMILY RESIDENTIAL		

SITE DATA TABLE (EAST LOT)

PROPOSED LOT AREA:	1.11 AC	
NUMBER OF SURFACE PARKING SPACES: (ADA ACCESSIBLE SPACES: 2) (SURFACE PARKING OUTSIDE GARAGE: 6)	29	
NUMBER OF GARAGE PARKING SPACES:	10	
BUILDING AREA:	15,102 SF	(0.35 AC)
IMPERVIOUS AREA:	14,430 SF	(0.33 AC)
GREEN SPACE AREA:	18,884 SF	(0.43 AC)
ZONING: MULTIPLE-FAMILY RESIDENTIAL		

DRAFTED: JG DESIGNED: DD REVIEWED: MAC

PLAN | DESIGN | DELIVER
www.pinnacle-engr.com

PINNACLE ENGINEERING GROUP
ENGINEERING | NATURAL RESOURCES | SURVEYING

WISCONSIN OFFICE:
20735 WATERTOWN ROAD
BROOKFIELD, WI 53186
(262) 754-8888
CHICAGO | MILWAUKIE | NATIONWIDE

FRAME PARK COMMONS

WAUKESHA, WI

SITE DIMENSION & PAVING PLAN

REVISIONS

PEG JOB No. 15-15.00-WI
PEG PM MAC
START DATE 05/20/2015
SCALE

SHEET
C-4
C-11

COPYRIGHT 2014

SITE DIMENSION & PAVING PLAN

FOR REVIEW ONLY

www.pinnacle-engr.com

Z:\PROJECTS\2018\1545.00-WI\CAD\SHEETS\15-45.00-WI SITE DIMENSION & PAVING PLAN.DWG

THESE PLANS AND DESIGNS ARE COPYRIGHT PROTECTED AND MAY NOT BE USED, IN WHOLE OR IN PART, WITHOUT THE WRITTEN CONSENT OF PINNACLE ENGINEERING GROUP, LLC

DRAFTED: JG DESIGNED: DD REVIEWED: MAC

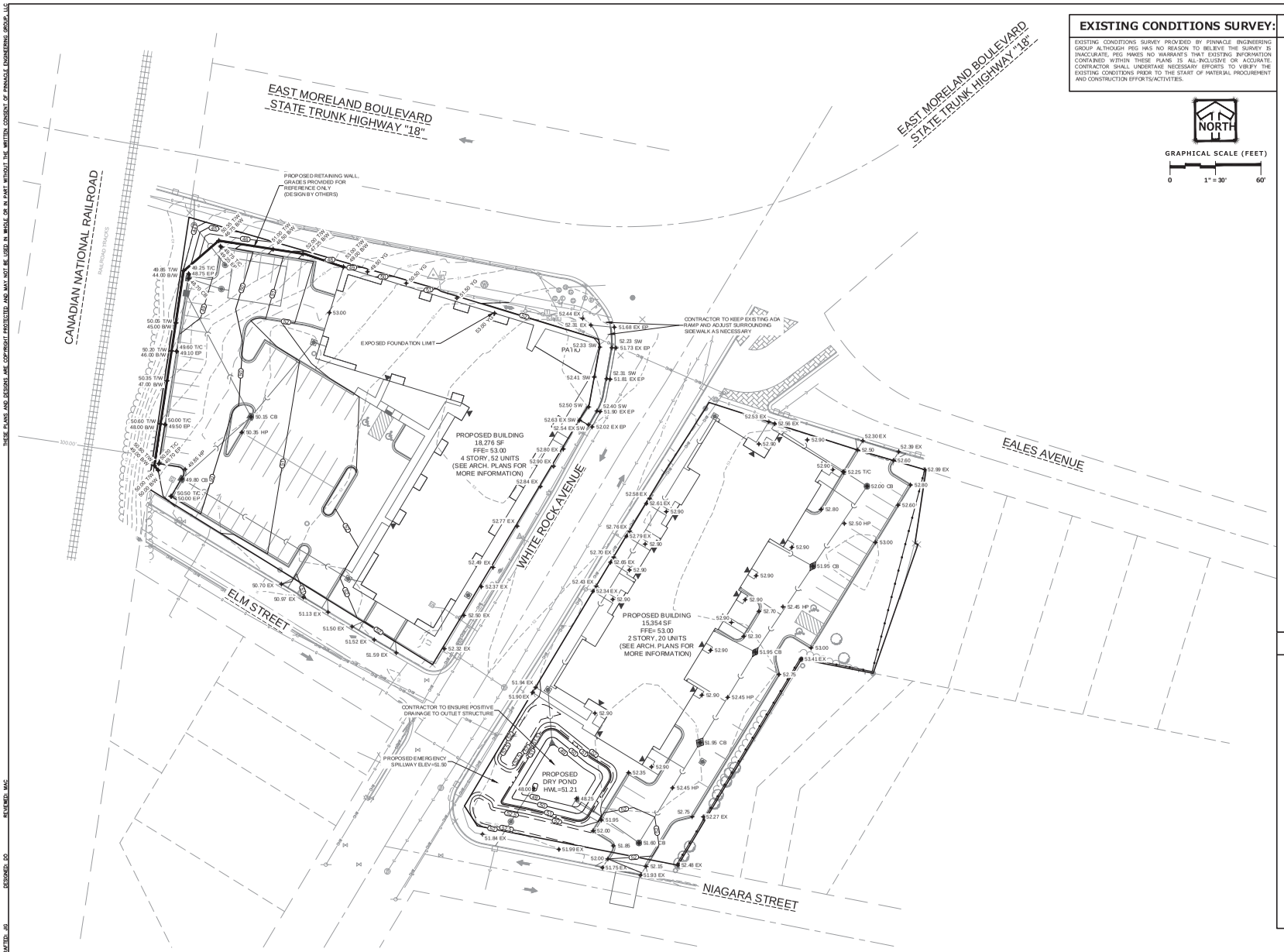

EXISTING CONDITIONS SURVEY:

EXISTING CONDITIONS SURVEY PROVIDED BY PINNACLE ENGINEERING GROUP ALTHOUGH PEG HAS NO REASON TO BELIEVE THE SURVEY IS INACCURATE, PEG MAKES NO WARRANTS THAT EXISTING INFORMATION CONTAINED WITHIN THESE PLANS IS ALL-INCLUSIVE OR ACCURATE. CONTRACTOR SHALL UNDERTAKE NECESSARY EFFORTS TO VERIFY THE EXISTING CONDITIONS PRIOR TO THE START OF MATERIAL PROCUREMENT AND CONSTRUCTION EFFORTS/ACTIVITIES.

NORTH

GRAPHICAL SCALE (FEET)

0 1" = 30' 60'

NOTES

1. CONTRACTOR SHALL VERIFY ALL GRADES, ENSURE ALL AREAS DRAIN PROPERLY AND REPORT ANY DISCREPANCIES TO PINNACLE ENGINEERING GROUP PRIOR TO THE START OF ANY CONSTRUCTION ACTIVITIES.
2. ALL EXISTING CONTOURS REPRESENT EXISTING SURFACE GRADES UNLESS OTHERWISE NOTED. ALL PROPOSED GRADES SHOWN ARE FINISH SURFACE GRADES UNLESS OTHERWISE NOTED.
3. SPOT ELEVATIONS REPRESENT THE GRADE ALONG THE EDGE OF PAVEMENT UNLESS OTHERWISE NOTED.
4. ALL EXCAVATIONS AND MATERIAL PLACEMENT SHALL BE COMPLETED TO DESIGN ELEVATIONS AS DEPICTED IN THE PLANS.

   CONTRACTOR SHALL ASSUME SOLE RESPONSIBILITY FOR THE COMPUTATION(S) OF ALL GRADING QUANTITIES. WHILE PEG ATTEMPTS TO PROVIDE A COST EFFECTIVE APPROACH TO BALANCE EARTHWORK, GRADING DESIGN IS BASED ON MANY FACTORS, INCLUDING SAFETY, AESTHETICS, AND COMMON ENGINEERING STANDARD OF CARE. THEREFORE NO GUARANTEE CAN BE MADE FOR A BALANCED SITE.

   THE CONTRACTOR MAY SOLICIT APPROVAL FROM ENGINEER/OWNER TO ADJUST FINAL GRADES FROM DESIGN GRADES TO PROVIDE AN OVERALL SITE BALANCE AS A RESULT OF FIELD CONDITIONS.
5. GRADING ACTIVITIES SHALL BE IN A MANNER TO ALLOW POSITIVE DRAINAGE ACROSS DISTURBED SOILS, WHICH MAY INCLUDE EXCAVATION OF TEMPORARY DITCHES TO PREVENT PONDING, AND IF NECESSARY PUMPING TO ALLEVIATE PONDING. CONTRACTOR SHALL PREVENT SURFACE WATER FROM ENTERING INTO EXCAVATIONS. IN NO WAY SHALL OWNER BE RESPONSIBLE FOR REMEDIATION OF UNSUITABLE SOILS CREATED/OR ELIMINATED AS A RESULT OF IMPROPER SITE GRADING OR SEQUENCING. CONTRACTOR SHALL SEQUENCE GRADING ACTIVITIES TO LIMIT EXPOSURE OF DISTURBED SOILS DUE TO WEATHER.
6. THE CONTRACTOR IS RESPONSIBLE FOR MEETING MINIMUM COMPACTION STANDARDS. THE CONTRACTOR SHALL NOTIFY ENGINEER/OWNER IF PROPER COMPACTION CANNOT BE OBTAINED. THE PROJECT'S GEOTECHNICAL CONSULTANT SHALL DETERMINE WHICH IN-SITU SOILS ARE TO BE CONSIDERED UNSUITABLE SOILS. THE ENGINEER/OWNER AND GEOTECHNICAL TESTING CONSULTANT WILL DETERMINE IF REMEDIAL MEASURES WILL BE NECESSARY.
7. IN THE EVENT THAT ANY MOISTURE-DENSITY TEST(S) FAIL TO MEET SPECIFICATION REQUIREMENTS, THE CONTRACTOR SHALL PERFORM CORRECTIVE WORK AS NECESSARY TO BRING THE MATERIAL INTO COMPLIANCE AND RETEST THE FAILED AREA AT NO COST TO THE OWNER.
8. WITH THE AUTHORIZATION OF THE ENGINEER/OWNER, MATERIAL THAT IS TOO WET TO PERMIT PROPER COMPACTION MAY BE SPREAD ON FILL AREAS IN AN EFFORT TO DRY. CONTRACTOR SHALL CLEARLY FIELD MARK THE EXTERIOR LIMITS OF SPREAD MATERIAL WITH PAINTED LATH AND SUBMIT A PLAN TO THE ENGINEER/OWNER THAT IDENTIFIES THE LIMITS. UNDER NO CONDITION SHALL THE SPREAD MATERIAL DEPTH EXCEED THE MOST RESTRICTIVE OF: THE EFFECTIVE TREATMENT DEPTH OF MACHINERY THAT WILL BE USED TO TURNOVER THE SPREAD MATERIAL; OR THE MAXIMUM COMPACTION LIFT DEPTH.
9. THE CONTRACTOR SHALL IMMEDIATELY NOTIFY ENGINEER/OWNER IF GROUNDWATER IS ENCOUNTERED DURING EXCAVATION.
10. CONTRACTOR IS SOLELY RESPONSIBLE FOR THE DESIGN AND CONSTRUCTION OF ADEQUATE AND SAFE TEMPORARY SHORING, BRACING, RETENTION STRUCTURES, AND EXCAVATIONS.
11. THE SITE SHALL BE COMPLETED TO WITHIN 0.10-FT (+/-) OF THE PROPOSED GRADES AS INDICATED WITHIN THE PLANS PRIOR TO PLACEMENT OF TOPSOIL OR STONE. CONTRACTOR IS ENCOURAGED TO SEQUENCE CONSTRUCTION SUCH THAT THE SITE IS DIVIDED INTO SMALLER AREAS TO ALLOW STABILIZATION OF DISTURBED SOILS IMMEDIATELY UPON COMPLETION OF INDIVIDUAL SMALLER AREAS.
12. CONTRACTOR SHALL CONTACT "DIGGER'S HOTLINE" FOR LOCATIONS OF ALL EXISTING UTILITIES PRIOR TO COMMENCEMENT OF ANY CONSTRUCTION ACTIVITIES AND SHALL BE RESPONSIBLE FOR PROTECTING SAID UTILITIES FROM ANY DAMAGE DURING CONSTRUCTION.
13. CONTRACTOR SHALL PROTECT INLETS AND ADJACENT PROPERTIES WITH SILT FENCING OR APPROVED EROSION CONTROL METHODS UNTIL CONSTRUCTION IS COMPLETED. CONTRACTOR SHALL PLACE SILT FENCING AT DOWN SLOPE SIDE OF GRADING LIMITS.
14. CONTRACTOR SHALL BE RESPONSIBLE FOR DAMAGE TO ANY EXISTING FACILITIES OR UTILITIES. ANY DAMAGE SHALL BE REPAIRED TO THE OWNER'S SATISFACTION AT THE EXPENSE OF THE CONTRACTOR.
15. WORK WITHIN ANY ROADWAY RIGHT-OF-WAY SHALL BE COORDINATED WITH THE APPROPRIATE MUNICIPAL OFFICIAL PRIOR TO COMMENCEMENT OF ANY CONSTRUCTION ACTIVITIES. CONTRACTOR SHALL BE RESPONSIBLE FOR OBTAINING ALL NECESSARY PERMITS AND FEES. GRADING WITHIN RIGHT-OF-WAY IS SUBJECT TO APPROVAL BY SAID OFFICIALS. RESTORATION OF RIGHT-OF-WAY IS CONSIDERED INCIDENTAL AND SHALL BE INCLUDED IN THE COST OF GRADING. RESTORATION SHALL INCLUDE ALL ITEMS NECESSARY TO RESTORE RIGHT-OF-WAY IN-KIND INCLUDING LANDSCAPING.
16. CONTRACTOR SHALL COMPLY WITH ALL WAUKESHA COUNTY CONSTRUCTION STANDARDS/ORDINANCES.
17. LANDSCAPE AND TURF AREAS SHALL HAVE A MINIMUM OF 4-INCH TOPSOIL REPLACEMENT.
18. TOPSOIL BERMING SHALL ACHIEVE 90% STANDARD PROCTOR DENSITY AT 3%(±) OPTIMUM MOISTURE CONTENT.
19. SURVEY BENCHMARKS AND MAPPING HAS BEEN PROVIDED BY PINNACLE ENGINEERING GROUP IN NO WAY DOES PEG WARRANT THE BASEMAP IS ALL INCLUSIVE OR REPRESENTATIVE OF ACTUAL CONDITIONS. CONTRACTOR SHALL PROVIDE CHECKS AS NECESSARY TO VERIFY THE BASEMAP CONTENT AND ACCURACY.

LEGEND

	STORM SEWER MANHOLE
	STORM SEWER CATCH BASIN- ROUND CASTING
	STORM SEWER CATCH BASIN- RECTANGULAR CASTING
	PROPOSED CONCRETE FLARED END SECTION
749	PROPOSED CONTOUR
+ 750.00	SPOT ELEVATION
FLOW / FLOW	DIRECTION OF SURFACE FLOW
	DITCH OR SWALE
	DIVERSION SWALE
	OVERFLOW RELIEF ROUTING
	CONCRETE SIDEWALK
	CURB AND GUTTER
	DEPRESSED CURB
	REVERSE PITCH CURB & GUTTER
EX	EXISTING
EP	EDGE OF PAVEMENT
HP	HIGH POINT
T/C	TOP OF CURB
B/W	BOTTOM OF WALL
T/W	TOP OF WALL
SW	SIDEWALK

PLAN | DESIGN | DELIVER
www.pinnacle-engr.com
PINNACLE ENGINEERING GROUP
ENGINEERING | NATURAL RESOURCES | SURVEYING
WISCONSIN OFFICE:
20725 WATERTOWN ROAD
BROOKFIELD, WI 53186
(262) 754-8888
CHICAGO | MILWAUKIE | NATIONWIDE

FRAME PARK COMMONS

WAUKESHA, WI

GRADING PLAN

REVISIONS

PEG JOB No: 15.45.00-WI
PEG PM: MAC
START DATE: 05/20/2019
SCALE:

SHEET
C-5
C-11

COPYRIGHT 2018

GRADING PLAN

FOR REVIEW ONLY

www.pinnacle-engr.com

Z:\PROJECTS\2018\1545.00-WI\CAD\SHEETS\15.45.00-WI GRADING PLAN.DWG

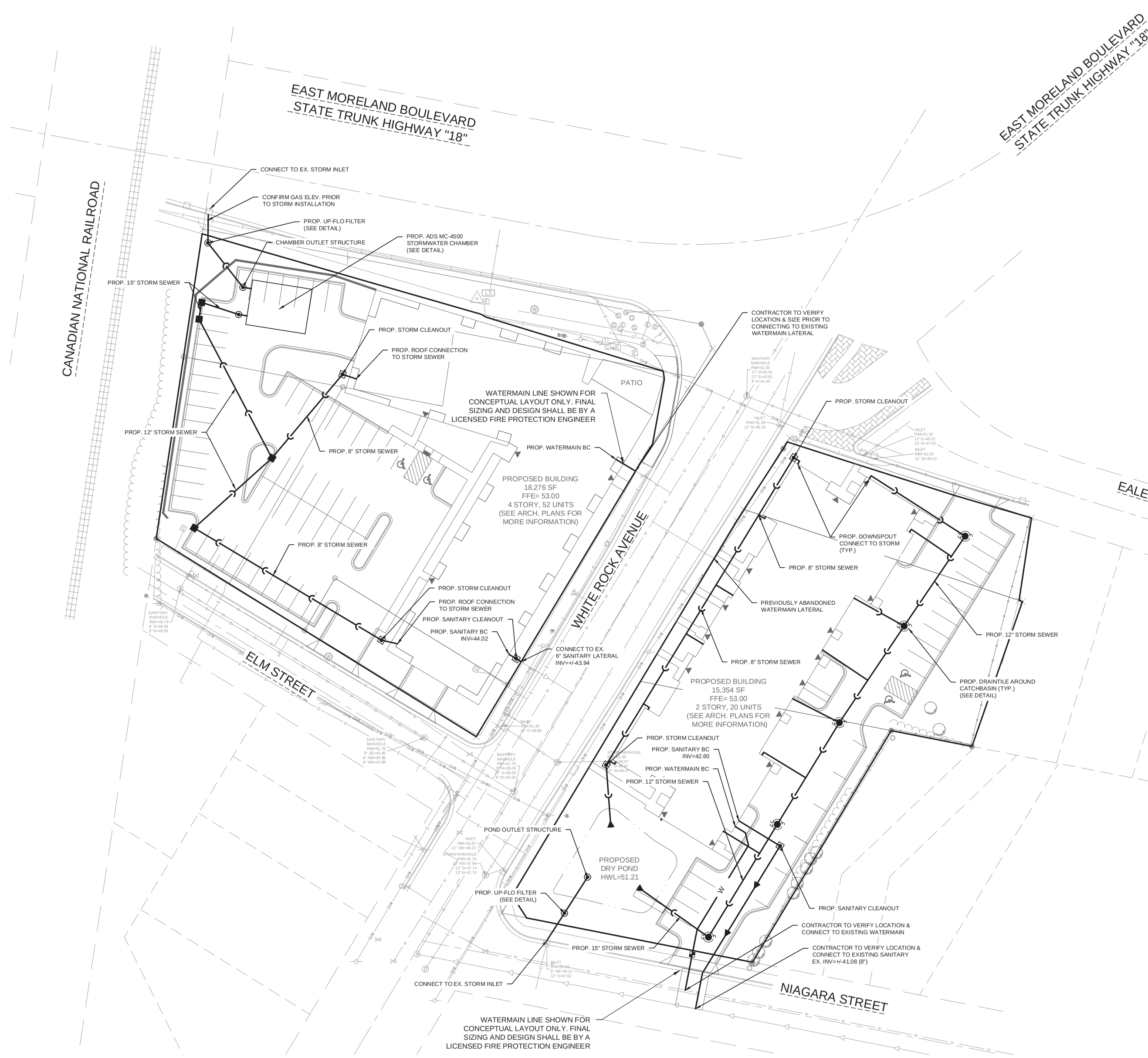

NOTES

1. EXISTING UTILITIES ARE SHOWN FOR INFORMATIONAL PURPOSES ONLY AND ARE NOT GUARANTEED TO BE ACCURATE OR ALL INCLUSIVE. CONTRACTOR IS RESPONSIBLE FOR VERIFYING THE TYPE, LOCATION, SIZE AND ELEVATION OF UNDERGROUND UTILITIES AS THEY DEEM NECESSARY FOR PROPOSED UTILITY CONNECTIONS AND/OR TO AVOID DAMAGE THERETO. CONTRACTOR SHALL CALL "DIGGER'S HOTLINE" PRIOR TO ANY CONSTRUCTION.
2. ALL UTILITY WORK SHALL BE DONE IN ACCORDANCE WITH THE STANDARD SPECIFICATIONS FOR SEWER AND WATER CONSTRUCTION IN WISCONSIN (LATEST EDITION AND ADDENDUM) AND ALL STATE AND LOCAL CODES AND SPECIFICATIONS. IT IS THE CONTRACTORS RESPONSIBILITY TO DETERMINE WHICH SPECIFICATIONS AND CODES APPLY, AND TO COORDINATE ALL CONSTRUCTION ACTIVITIES WITH THE APPROPRIATE LOCAL AND STATE AUTHORITIES.
3. UTILITY CONSTRUCTION AND SPECIFICATIONS SHALL COMPLY WITH THE CITY OF WAUKESHA SPECIAL PROVISIONS AND WISCONSIN DEPARTMENT OF SAFETY AND PROFESSIONAL SERVICES COMM 82.
4. LENGTHS OF PROPOSED UTILITIES ARE TO CENTER OF STRUCTURES OR FITTINGS AND MAY VARY SLIGHTLY FROM PLAN. LENGTHS ARE SHOWN FOR CONTRACTOR CONVENIENCE ONLY. CONTRACTOR IS SOLELY RESPONSIBLE FOR COMPUTATIONS OF MATERIALS REQUIRED TO COMPLETE WORK. LENGTHS SHALL BE FIELD VERIFIED DURING CONSTRUCTION.
5. CONTRACTOR SHALL ADJUST AND/OR RECONSTRUCT EXISTING UTILITY COVERS (SUCH AS MANHOLE COVERS, VALVE BOX COVERS, ETC.) TO MATCH FINISHED GRADES OF THE AREAS DISTURBED DURING CONSTRUCTION.
6. CONTRACTOR SHALL FIELD VERIFY LOCATIONS, ELEVATIONS, AND SIZES OF PROPOSED UTILITIES AND CHECK ALL UTILITY CROSSINGS FOR CONFLICTS PRIOR TO ATTEMPTING CONNECTIONS AND BEGINNING UTILITY CONSTRUCTION AND NOTIFY THE OWNER OF ANY DISCREPANCIES OR CONFLICTS.
7. ALL NEW ON-SITE SANITARY, STORM AND WATER UTILITIES SHALL BE PRIVATELY OWNED AND MAINTAINED BY THE PROPERTY OWNER.
8. THE CONTRACTOR SHALL CONTACT THE CITY OF WAUKESHA PUBLIC WORKS DEPARTMENT 48-HOURS IN ADVANCE OF SANITARY, WATER AND STORM CONNECTIONS TO THE CITY-OWNED SYSTEM TO SCHEDULE INSPECTIONS.
9. ROUTING OF GAS, ELECTRIC AND TELEPHONE SERVICES ARE SHOWN ON THE ARCHITECTURAL PLANS AND SUBJECT TO CHANGE BASED UPON FINAL REVIEW AND APPROVAL BY RESPECTIVE UTILITY COMPANIES AND OWNER. CONTRACTOR SHALL CONTACT EACH UTILITY COMPANY AND COORDINATE FINAL LOCATIONS FOR ALL UTILITY SERVICES PRIOR TO START OF CONSTRUCTION.
10. IT IS THE CONTRACTOR'S RESPONSIBILITY TO COORDINATE WITH THE PROPER AUTHORITIES FOR ANY REQUIRED PERMITS, AUTHORIZATIONS, TRAFFIC CONTROL AND ANY PERMIT FEES REQUIRED.
11. FIELD TILE CONNECTION - ALL FIELD TILE ENCOUNTERED DURING CONSTRUCTION SHALL BE INCLUDED IN THE UNIT PRICE(S) FOR STORM SEWER. TILE LINES CROSSED BY THE TRENCH SHALL BE REPLACED WITH THE SAME MATERIAL AS THE STORM SEWER.
12. THE CONTRACTOR IS RESPONSIBLE FOR THE SIZE, TYPE AND NUMBER OF WATER MAIN BENDS, HORIZONTAL AND VERTICAL, REQUIRED TO COMPLETE CONSTRUCTION. COST FOR BENDS, HORIZONTAL AND VERTICAL, SHALL BE INCIDENTAL AND INCLUDED IN THE OVERALL COST OF THE CONTRACT.
13. STORM SEWER SPECIFICATIONS -

    PIPE - REINFORCED CONCRETE PIPE (RCP) SHALL MEET THE REQUIREMENTS OF ASTM CLASS C-76 WITH RUBBER GASKET JOINTS CONFORMING TO ASTM C-443. STRENGTH CLASSIFICATIONS SHALL BE IN ACCORDANCE WITH THE FOLLOWING:

HEIGHT OF COVER (FEET):	0-2	2-3	3-6	6-15	15-25	25+
MINIMUM CONCRETE PIPE CLASSIFICATION:	IV	III	II	III	IV	ENGINEER TO SPECIFY

    HIGH DENSITY DUAL-WALL POLYETHYLENE N-12 CORRUGATED PIPE (HDPE) SHALL BE AS MANUFACTURED BY ADS OR EQUAL WITH WATER TIGHT JOINTS, AND SHALL MEET THE REQUIREMENTS OF AASHTO DESIGNATION M-294 TYPE "S", OR POLYVINYL CHLORIDE (PVC) - CLASS PS46 MEETING AASHTO M278, AS NOTED. IF HDPE PIPE IS USED FOR POND OUTFALLS, A MINIMUM OF THREE (3) SECTIONS (2 STRAPS) SHALL BE STRAPPED TOGETHER.

    INLETS/CATCH BASINS - INLETS/CATCH BASINS SHALL BE CONSTRUCTED IN ACCORDANCE WITH FILE NO. 25 OF THE "STANDARD SPECIFICATIONS" WITH A 1'-8" X 2'-6" MAXIMUM OPENING. FRAME & GRATE SHALL BE NEENAH R-1580 WITH TYPE G GRATE, OR EQUAL. CURB FRAME & GRATE SHALL BE NEENAH R-3067, OR EQUAL. THE SUMP DEPTH (VERTICAL DISTANCE FROM THE BASE OF THE STRUCTURE TO OUTFALL INVERT OF THE PIPE) SHALL BE 18" MIN. STRUCTURE SHOP DRAWINGS SHALL BE SUBMITTED TO PINNACLE ENGINEERING GROUP FOR REVIEW AND APPROVAL PRIOR TO MANUFACTURING AND INSTALLATION.

    BACKFILL AND BEDDING - STORM SEWER SHALL BE CONSTRUCTED WITH GRAVEL BACKFILL AND CLASS "B" BEDDING IN ALL PAVED AREAS AND TO A POINT 5 FEET BEYOND THE EDGE OF PAVEMENT. TRENCHES RUNNING PARALLEL TO AND LESS THAN 5 FEET FROM THE EDGE OF PAVEMENT SHALL ALSO REQUIRE GRAVEL BACKFILL. LANDSCAPED AREAS MAY BE BACKFILLED WITH EXCAVATED MATERIAL IN CONFORMANCE WITH SECTION 8.43.5 OF THE "STANDARD SPECIFICATIONS".
    MANHOLE FRAMES AND COVERS - MANHOLE FRAMES AND COVERS SHALL BE NEENAH R-1642 WITH TYPE "B" SELF SEALING LIDS, NON-ROCKING OR EQUAL .

    IF HDPE PIPE IS USED FOR POND OUTFALLS, A MINIMUM OF THREE (3) SECTIONS (2 STRAPS) SHALL BE STRAPPED TOGETHER.
16. WATER MAIN SPECIFICATIONS -

    PIPE - WATER MAIN SHALL BE POLYVINYL CHLORIDE (PVC) PIPE MEETING THE REQUIREMENTS OF AWWA STANDARD C-900, CLASS 150, DR-18, WITH CAST IRON O.D. AND INTEGRAL ELASTOMERIC BELL AND SPIGOT JOINTS. VALVES AND VALVE BOXES - GATE VALVES SHALL BE AWWA GATE VALVES MEETING THE REQUIREMENTS OF AWWA C-500 AND CHAPTER 8.27.0 OF THE "STANDARD SPECIFICATIONS". GATE VALVES AND VALVE BOXES SHALL CONFORM TO LOCAL PLUMBING ORDINANCES.

    HYDRANTS - HYDRANTS SHALL CONFORM TO THE SPECIFICATIONS OF THE CITY OF WAUKESHA AND IN ACCORDANCE WITH FILE NO. 38 OF THE "STANDARD SPECIFICATIONS." THE DISTANCE FROM THE GROUND LINE TO THE CENTERLINE OF THE LOWEST NOZZLE AND THE LOWEST CONNECTION OF THE FIRE DEPARTMENT SHALL BE NO LESS THAN 18-INCHES AND NO GREATER THAN 23-INCHES.

    BEDDING AND COVER MATERIAL - PIPE BEDDING AND COVER MATERIAL SHALL BE SAND, CRUSHED STONE CHIPS OR CRUSHED STONE SCREENINGS CONFORMING TO CHAPTER 8.43.2 OF THE "STANDARD SPECIFICATIONS".

    BACKFILL - BACKFILL MATERIAL AND INSTALLATION SHALL BE IN ACCORDANCE WITH CHAPTER 2.6.0 OF THE "STANDARD SPECIFICATIONS". GRAVEL BACKFILL IS REQUIRED IN ALL PAVED AREAS AND TO A POINT 5 FEET BEYOND THE EDGE OF PAVEMENT. TRENCHES RUNNING PARALLEL TO AND LESS THAN 5 FEET FROM THE EDGE OF PAVEMENT SHALL ALSO REQUIRE GRAVEL BACKFILL. LANDSCAPED AREAS MAY BE BACKFILLED WITH EXCAVATED MATERIAL IN CONFORMANCE WITH SECTION 8.43.5 OF THE "STANDARD SPECIFICATIONS".
17. SANITARY SEWER SPECIFICATIONS -

    PIPE - SANITARY SEWER PIPE MATERIAL SHALL BE POLYVINYL CHLORIDE (PVC) MEETING REQUIREMENTS OF ASTM D 3034, SDR-35, WITH INTEGRAL BELL TYPE FLEXIBLE ELASTOMERIC JOINTS, MEETING THE REQUIREMENTS OF ASTM D-3212.

    BEDDING AND COVER MATERIAL - BEDDING AND COVER MATERIAL SHALL CONFORM TO THE APPROPRIATE SECTIONS OF THE "STANDARD SPECIFICATION" WITH THE FOLLOWING MODIFICATION: "COVER MATERIAL SHALL BE THE SAME AS USED FOR BEDDING AND SHALL CONFORM TO SECTION 8.43.2 (A). BEDDING AND COVER MATERIAL SHALL BE PLACED IN A MINIMUM OF THREE SEPARATE LIFTS, OR AS REQUIRED TO INSURE ADEQUATE COMPACTING OF THESE MATERIALS, WITH ONE LIFT OF BEDDING MATERIAL ENDING AT OR NEAR THE SPRINGLINE OF THE PIPE. THE CONTRACTOR SHALL TAKE CARE TO COMPLETELY WORK BEDDING MATERIAL UNDER THE HAUNCH OF THE PIPE TO PROVIDE ADEQUATE SIDE SUPPORT."

    BACKFILL - BACKFILL MATERIAL AND INSTALLATION SHALL BE IN ACCORDANCE CHAPTER 2.6.0 OF THE "STANDARD SPECIFICATIONS." GRAVEL BACKFILL IS REQUIRED IN ALL PAVED AREAS AND TO A POINT 5 FEET BEYOND THE EDGE OF PAVEMENT. TRENCHES RUNNING PARALLEL TO AND LESS THAN 5 FEET FROM THE EDGE OF PAVEMENT SHALL ALSO REQUIRE GRAVEL BACKFILL. LANDSCAPED AREAS MAY BE BACKFILLED WITH EXCAVATED MATERIAL IN CONFORMANCE WITH SECTION 8.43.5 OF THE "STANDARD SPECIFICATIONS."

    MANHOLES - MANHOLES SHALL BE CONSTRUCTED IN ACCORDANCE WITH FILE NOS. 12, 13 AND 15 OF THE "STANDARD SPECIFICATIONS" AND ALL SPECIAL PROVISIONS OF THE CITY OF WAUKESHA. STRUCTURE SHOP DRAWINGS SHALL BE SUBMITTED TO PINNACLE ENGINEERING GROUP FOR REVIEW AND APPROVAL PRIOR TO MANUFACTURING AND INSTALLATION.

    MANHOLE FRAMES AND COVERS - MANHOLE FRAMES AND COVERS SHALL BE NEENAH R-1642 WITH TYPE "B" SELF SEALING LIDS, NON-ROCKING OR EQUAL
18. WATER MAIN AND SANITARY SEWER SHALL BE INSULATED WHEREVER THE DEPTH OF COVER IS LESS THAN 6 FEET. INSULATION AND PLACING OF INSULATION SHALL CONFORM TO CHAPTER 4.17.0 "INSULATION" OF THE STANDARD SPECIFICATIONS FOR SEWER AND WATER CONSTRUCTION IN WISCONSIN 6TH EDITION UPDATED WITH ITS LATEST ADDENDUM (TYP.).
19. TRACER WIRE SHALL BE INSTALLED IN ACCORDANCE WITH THE PROVISIONS OF THESE CODE SECTIONS AS PER 182.0715(2R) OF THE STATUTES. THE TRACER WIRE FOR THE SANITARY SEWER LATERAL SHALL BE CONTINUOUS AND SHALL BE EXTENDED ABOVE GRADE VIA A 4-INCH PVC PIPE WITH SCREW-ON CAP ADJACENT TO THE PROPOSED TERMINATION POINT OF THE LATERAL FOR THE PROPOSED BUILDING.
20. SEE UTILITY PLANS AND CONSTRUCTION DETAILS FOR ADDITIONAL INFORMATION.

LEGEND

SANITARY SEWER MANHOLE	FIRE PROTECTION
STORM SEWER MANHOLE	UTILITY CROSSING
STORM SEWER CATCH BASIN (ROUND CASTING)	ELECTRICAL CABLE
STORM SEWER CATCH BASIN (RECTANGULAR CASTING)	GAS MAIN
PRECAST CONCRETE FLARED END SECTION	TELEPHONE LINE
CLEANOUT	OVERHEAD WIRES
VALVE BOX	LIGHTING
FIRE HYDRANT	ELECTRICAL TRANSFORMER OR PEDESTAL
SANITARY SEWER	POWER POLE
FORCE MAIN	POWER POLE WITH LIGHTS
STORM SEWER	STREET SIGN
DRAIN TILE	UTILITY TO BE REMOVED
WATER MAIN	

EXISTING CONDITIONS SURVEY:

EXISTING CONDITIONS SURVEY PROVIDED BY PINNACLE ENGINEERING GROUP ALTHOUGH PEG HAS NO REASON TO BELIEVE THE SURVEY IS INACCURATE, PEG MAKES NO WARRANTS THAT EXISTING INFORMATION CONTAINED WITHIN THESE PLANS IS ALL-INCLUSIVE OR ACCURATE. CONTRACTOR SHALL UNDERTAKE NECESSARY EFFORTS TO VERIFY THE EXISTING CONDITIONS PRIOR TO THE START OF MATERIAL PROCUREMENT AND CONSTRUCTION EFFORTS/ACTIVITIES.

FOR REVIEW ONLY

PINNACLE ENGINEERING GROUP
ENGINEERING I NATURAL RESOURCES I SURVEYING
PLAN I DESIGN I DELIVER
www.pinnacle-engr.com
WISCONSIN OFFICE:
20725 WATERTOWN ROAD
BROOKFIELD, WI 53186
(262) 754-8888
CHICAGO I MILWAUKEE : NATIONWIDE

FRAME PARK COMMONS

WAUKESHA, WI

UTILITY PLAN

REVISIONS

PEG JOB No. 1545.00-WI
PEG PM MAC
START DATE 08/20/2019
SCALE

SHEET C-6
C-11

© COPYRIGHT 2018

DRAFTED: JIG DESIGNED: DO REVIEWED: MAC

THESE PLANS AND DESIGNS ARE COPYRIGHT PROTECTED AND MAY NOT BE USED IN WHOLE OR IN PART WITHOUT THE WRITTEN CONSENT OF PINNACLE ENGINEERING GROUP, LLC

Z:\PROJECTS\2018\1545.00-WI\CAD\SHEETS\1545.00-WI UTILITY PLAN.DWG

UTILITY PLAN

THESE PLANS AND DESIGNS ARE COPYRIGHT PROTECTED AND MAY NOT BE USED IN WHOLE OR IN PART, WITHOUT THE WRITTEN CONSENT OF PINNACLE ENGINEERING GROUP, LLC

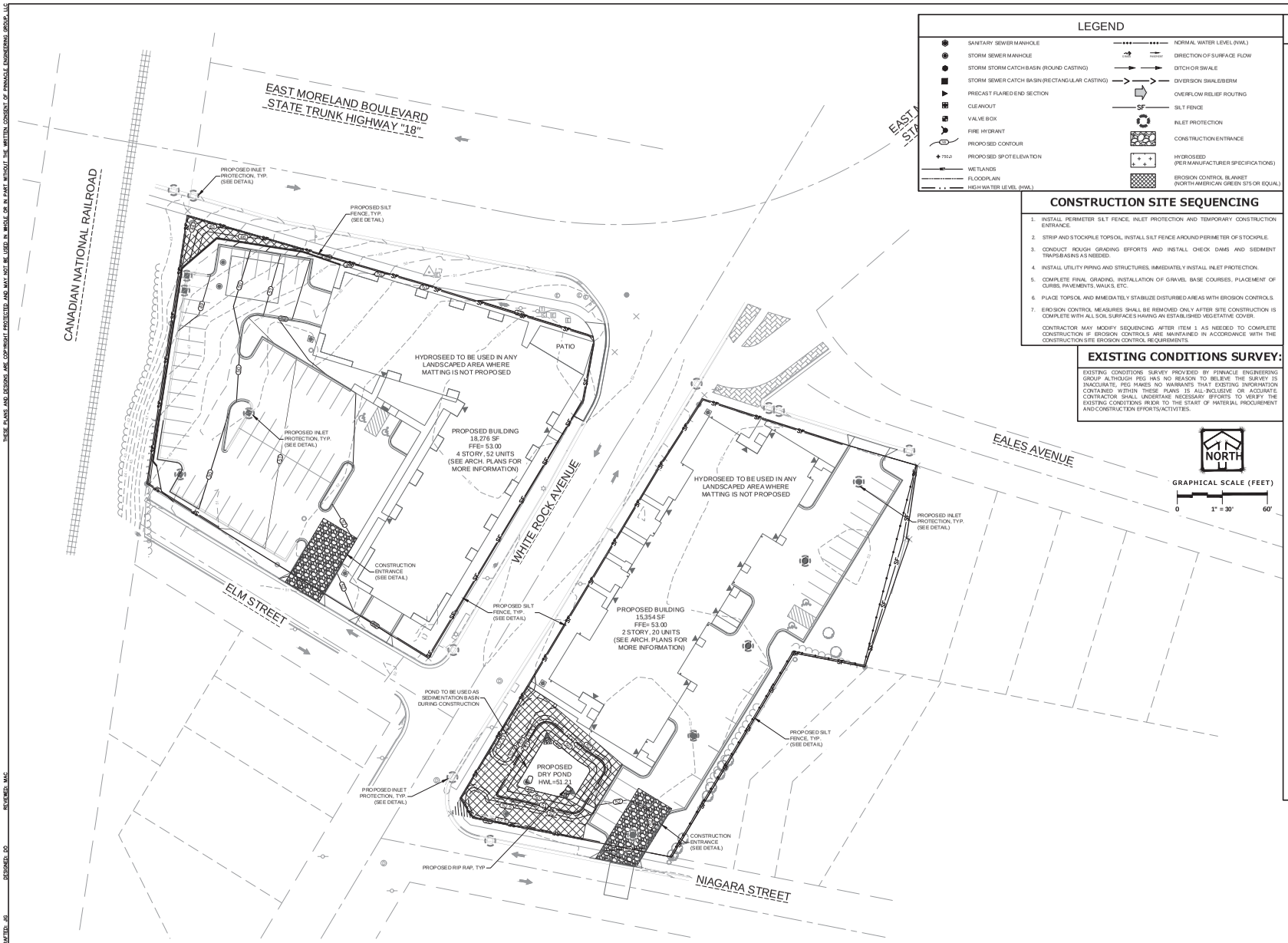

LEGEND

SANITARY SEWER MANHOLE	NORMAL WATER LEVEL (NWL)
STORM SEWER MANHOLE	DIRECTION OF SURFACE FLOW
STORM STORM CATCH BASIN (ROUND CASTING)	DITCH OR SWALE
STORM SEWER CATCH BASIN (RECTANGULAR CASTING)	DIVERSION SWALE/BERM
PRECAST FLARED END SECTION	OVERFLOW RELIEF ROUTING
CLEANOUT	SILT FENCE
VALVE BOX	INLET PROTECTION
FIRE HYDRANT	CONSTRUCTION ENTRANCE
PROPOSED CONTOUR	HYDROSEED (PER MANUFACTURER SPECIFICATIONS)
PROPOSED SPOT ELEVATION	EROSION CONTROL BLANKET (NORTH AMERICAN GREEN S75 OR EQUAL)
WETLANDS	
FLOODPLAIN	
HIGH WATER LEVEL (HWL)	

CONSTRUCTION SITE SEQUENCING

1. INSTALL PERIMETER SILT FENCE, INLET PROTECTION AND TEMPORARY CONSTRUCTION ENTRANCE.
2. STRIP AND STOCKPILE TOPSOIL, INSTALL SILT FENCE AROUND PERIMETER OF STOCKPILE.
3. CONDUCT ROUGH GRADING EFFORTS AND INSTALL CHECK DAMS AND SEDIMENT TRAPS/BASINS AS NEEDED.
4. INSTALL UTILITY PIPING AND STRUCTURES, IMMEDIATELY INSTALL INLET PROTECTION.
5. COMPLETE FINAL GRADING, INSTALLATION OF GRAVEL BASE COURSES, PLACEMENT OF CURBS, PAVEMENTS, WALKS, ETC.
6. PLACE TOPSOIL AND IMMEDIATELY STABILIZE DISTURBED AREAS WITH EROSION CONTROLS.
7. EROSION CONTROL MEASURES SHALL BE REMOVED ONLY AFTER SITE CONSTRUCTION IS COMPLETE WITH ALL SOIL SURFACES HAVING AN ESTABLISHED VEGETATIVE COVER.

   CONTRACTOR MAY MODIFY SEQUENCING AFTER ITEM 1 AS NEEDED TO COMPLETE CONSTRUCTION IF EROSION CONTROLS ARE MAINTAINED IN ACCORDANCE WITH THE CONSTRUCTION SITE EROSION CONTROL REQUIREMENTS.

EXISTING CONDITIONS SURVEY:

EXISTING CONDITIONS SURVEY PROVIDED BY PINNACLE ENGINEERING GROUP ALTHOUGH PEG HAS NO REASON TO BELIEVE THE SURVEY IS INACCURATE, PEG MAKES NO WARRANTS THAT EXISTING INFORMATION CONTAINED WITHIN THESE PLANS IS ALL-INCLUSIVE OR ACCURATE. CONTRACTOR SHALL UNDERTAKE NECESSARY EFFORTS TO VERIFY THE EXISTING CONDITIONS PRIOR TO THE START OF MATERIAL PROCUREMENT AND CONSTRUCTION EFFORTS/ACTIVITIES.

GENERAL EROSION AND SEDIMENT CONTROL NOTES

1. ALL CONSTRUCTION SHALL ADHERE TO THE REQUIREMENTS SET FORTH IN EPA'S NATIONAL POLLUTANT DISCHARGE ELIMINATION SYSTEM (NPDES) STORMWATER GENERAL PERMIT ("WPDES" PERMIT NO. WI-S067831-4) FOR CONSTRUCTION SITE LAND DISTURBANCE ACTIVITIES. ALL EROSION AND SEDIMENT CONTROL MEASURES ARE TO BE CONSTRUCTED AND MAINTAINED IN ACCORDANCE WITH LOCAL, STATE AND FEDERAL TECHNICAL STANDARDS AND PROVISIONS IN EFFECT AT THE TIME OF CONSTRUCTION. THESE PROCEDURES AND STANDARDS SHALL BE REFERRED TO AS BEST MANAGEMENT PRACTICES (BMP'S). IT IS THE RESPONSIBILITY OF ALL CONTRACTORS ASSOCIATED WITH THE PROJECT TO OBTAIN A COPY OF, AND UNDERSTAND, THE BMP'S PRIOR TO THE START OF CONSTRUCTION ACTIVITIES.
2. THE EROSION CONTROL MEASURES INDICATED ON THE PLANS ARE THE MINIMUM REQUIREMENTS. ADDITIONAL CONTROL MEASURES AS DIRECTED BY OWNER/ENGINEER OR GOVERNING AGENCIES SHALL BE INSTALLED WITHIN 24 HOURS OF REQUEST.
3. MODIFICATIONS TO THE APPROVED SWPPP IN ORDER TO MEET UNFORESEEN FIELD CONDITIONS ARE ALLOWED IF MODIFICATIONS CONFORM TO BMP'S. ALL MODIFICATIONS MUST BE APPROVED BY OWNER/ENGINEER/GOVERNING AGENCY PRIOR TO DEVIATION OF THE APPROVED PLAN.
4. INSTALL PERIMETER EROSION CONTROL MEASURES (SUCH AS CONSTRUCTION ENTRANCES, SILT FENCE AND EXISTING INLET PROTECTION) PRIOR TO ANY SITE WORK, INCLUDING GRADING OR DISTURBANCE OF EXISTING SURFACE COVER, AS SHOWN ON PLAN IN ORDER TO PROTECT ADJACENT PROPERTIES/STORM SEWER SYSTEMS FROM SEDIMENT TRANSPORT.
5. CONSTRUCTION ENTRANCES SHALL BE INSTALLED AT ALL LOCATIONS OF VEHICLE INGRESS/EGRESS POINTS. CONTRACTOR IS RESPONSIBLE TO COORDINATE LOCATION(S) WITH THE PROPER AUTHORITIES, PROVIDE NECESSARY FEES AND OBTAIN ALL REQUIRED APPROVALS OR PERMITS. ADDITIONAL CONSTRUCTION ENTRANCES OTHER THAN AS SHOWN ON THE PLANS MUST BE APPROVED BY THE APPLICABLE GOVERNING AGENCIES PRIOR TO INSTALLATION.
6. PAVED SURFACES ADJACENT TO CONSTRUCTION ENTRANCES SHALL BE SWEPT AND/OR SCRAPED TO REMOVE ACCUMULATED SOIL, DIRT AND/OR DUST IMMEDIATELY AND AS REQUESTED BY THE GOVERNING AGENCIES.
7. ALL EXISTING STORM SEWER FACILITIES THAT WILL COLLECT RUNOFF FROM DISTURBED AREAS SHALL BE PROTECTED TO TO PREVENT SEDIMENT DEPOSITION WITHIN STORM SEWER SYSTEMS. INLET PROTECTION SHALL BE IMMEDIATELY FITTED AT THE INLET OF ALL INSTALLED STORM SEWER AND SILT FENCE SHALL BE IMMEDIATELY FITTED AT ALL INSTALLED CULVERT INLETS. ALL INLETS, STRUCTURES, PIPES, AND SWALES SHALL BE KEPT CLEAN AND FREE OF SEDIMENTATION AND DEBRIS.
8. EROSION CONTROL FOR UTILITY CONSTRUCTION (STORM SEWER, WATER MAIN, ETC.) OUTSIDE OF THE PERIMETER CONTROLS SHALL INCORPORATE THE FOLLOWING:

   PLACE EXCAVATED TRENCH MATERIAL ON THE HIGH SIDE OF THE TRENCH.

   BACKFILL, COMPACT AND STABILIZE THE TRENCH IMMEDIATELY AFTER PIPE CONSTRUCTION.

   DISCHARGE TRENCH WATER INTO A SEDIMENTATION BASIN OR FILTERING TANK IN ACCORDANCE WITH BMP'S PRIOR TO RELEASE INTO STORM SEWER OR DITCHES.
9. AT A MINIMUM, SEDIMENT BASINS AND NECESSARY TEMPORARY DRAINAGE PROVISIONS SHALL BE CONSTRUCTED AND OPERATIONAL BEFORE BEGINNING OF SIGNIFICANT MASS GRADING OPERATIONS TO PREVENT OFFSITE DISCHARGE OF UNTREATED RUNOFF.
10. ALL WATERCOURSES AND WETLANDS SHALL BE PROTECTED WITH SILT FENCE TO PREVENT ANY DIRECT DISCHARGE FROM DISTURBED SOILS.
11. ALL TEMPORARY AND PERMANENT EROSION CONTROL MEASURES MUST BE MAINTAINED AND REPAIRED AS NEEDED. THE GENERAL CONTRACTOR WILL BE RESPONSIBLE FOR INSPECTION AND REPAIR DURING CONSTRUCTION. THE OWNER WILL BE RESPONSIBLE IF EROSION CONTROL IS REQUIRED AFTER THE CONTRACTOR HAS COMPLETED THE PROJECT.
12. TOPSOIL STOCKPILES SHALL HAVE A BERM OR TRENCH AROUND THE CIRCUMFERENCE AND PERIMETER SILT FENCE TO CONTROL SILT. IF TOPSOIL STOCKPILE REMAINS UNDISTURBED FOR MORE THAN SEVEN (7) DAYS, TEMPORARY SEEDING AND STABILIZATION IS REQUIRED.
13. EROSION CONTROL MEASURES TEMPORARILY REMOVED FOR UNAVOIDABLE CONSTRUCTION ACTIVITIES SHALL BE IN WORKING ORDER IMMEDIATELY FOLLOWING COMPLETION OF SUCH ACTIVITIES OR PRIOR TO THE COMPLETION OF EACH WORK DAY, WHICH EVER OCCURS FIRST.
14. MAINTAIN SOIL EROSION CONTROL DEVICES THROUGH THE DURATION OF THIS PROJECT. ALL TEMPORARY EROSION AND SEDIMENT CONTROL MEASURES SHALL BE REMOVED WITHIN THIRTY (30) DAYS AFTER FINAL SITE STABILIZATION IS ACHIEVED OR AFTER THE TEMPORARY MEASURES ARE NO LONGER NEEDED. DISTURBANCES ASSOCIATED WITH EROSION CONTROL REMOVAL SHALL BE IMMEDIATELY STABILIZED.
15. PUMPS MAY BE USED AS BYPASS DEVICES. IN NO CASE SHALL PUMPED WATER BE DIVERTED OUTSIDE THE PROJECT LIMITS. PUMP DISCHARGE SHALL BE DIRECTED INTO AN APPROVED FILTER BAG OR APPROVED SETTLING DEVICE.
16. GRADING EFFORTS SHALL BE CONDUCTED IN SUCH A MANNER AS TO MINIMIZE EROSION. EROSION AND SEDIMENT CONTROL MEASURES SHALL CONSIDER THE TIME OF YEAR, SITE CONDITIONS, AND THE USE OF TEMPORARY OR PERMANENT MEASURES. ALL DISTURBED AREAS THAT WILL NOT BE WORKED FOR A PERIOD OF FOURTEEN (14) DAYS REQUIRE TEMPORARY SEEDING FOR EROSION CONTROL. SEEDING FOR EROSION CONTROL SHALL BE IN ACCORDANCE WITH TECHNICAL STANDARDS.
17. ALL DISTURBED SLOPES EXCEEDING 4:1, SHALL BE STABILIZED WITH NORTH AMERICAN GREEN S75BN EROSION MATTING (OR APPROVED EQUAL) AND ALL CHANNELS SHALL BE STABILIZED WITH NORTH AMERICAN GREEN C125BN (OR APPROVED EQUAL) OR APPLICATION OF AN APPROVED POLYMER SOIL STABILIZATION TREATMENT OR A COMBINATION THEREOF, AS REQUIRED. EROSION MATTING AND/OR NETTING USED ONSITE SHALL BE INSTALLED IN ACCORDANCE WITH MANUFACTURER'S GUIDELINES.
18. DURING PERIODS OF EXTENDED DRY WEATHER, THE CONTRACTOR SHALL KEEP A WATER TRUCK ON SITE FOR THE PURPOSE OF WATERING DOWN SOILS WHICH MAY OTHERWISE BECOME AIRBORNE. THE CONTRACTOR IS RESPONSIBLE FOR CONTROLLING WIND EROSION (DUST) DURING CONSTRUCTION AT HIS/HER EXPENSE.
19. DISTURBED AREAS AND AREAS USED FOR STORAGE OF MATERIALS THAT ARE EXPOSED TO PRECIPITATION SHALL BE VISUALLY INSPECTED FOR EVIDENCE OF, OR THE POTENTIAL FOR, POLLUTANTS ENTERING THE DRAINAGE SYSTEM ON A DAILY BASIS.
20. QUALIFIED PERSONNEL (PROVIDED BY THE GENERAL/PRIME CONTRACTOR) SHALL INSPECT DISTURBED AREAS OF THE CONSTRUCTION SITE THAT HAVE NOT BEEN FINALLY STABILIZED AND EROSION AND SEDIMENT CONTROLS WITHIN 24 HOURS OF ALL 0.5-INCH, OR MORE, PRECIPITATION EVENTS WITH A MINIMUM INSPECTION INTERVAL OF ONCE EVERY SEVEN (7) CALENDAR DAYS IN THE ABSENCE OF A QUALIFYING RAIN OR SNOWFALL EVENT. REPORTING SHALL BE IN ACCORDANCE WITH OF THE GENERAL PERMIT. CONTRACTOR SHALL IMMEDIATELY ARRANGE TO HAVE ANY DEFICIENT ITEMS REVEALED DURING INSPECTIONS REPAIRED/REPLACED.
21. SEE ADDITIONAL DETAILS AND NOTES ON SITE STABILIZATION AND CONSTRUCTION DETAILS.

PLAN | DESIGN | DELIVER
www.pinnacle-engr.com
PINNACLE ENGINEERING GROUP
ENGINEERING | NATURAL RESOURCES | SURVEYING
WISCONSIN OFFICE:
20725 WATERTOWN ROAD
BROOKFIELD, WI 53186
(262) 754-8888
CHICAGO | MILWAUKIE | NATIONWIDE

FRAME PARK COMMONS

WAUKESHA, WI

SITE STABILIZATION PLAN

REVISIONS

PEG JOB No.	1545.00-WI
PEG PM	MAC
START DATE	05/20/2019
SCALE	

SHEET C-7 / C-11

© COPYRIGHT 2018

SITE STABILIZATION PLAN

FOR REVIEW ONLY

www.pinnacle-engr.com

DRAFTED: JG DESIGNED: DD REVIEWED: MAC

Z:\PROJECTS\2018\1545.00-WI\CAD\SHEETS\1545.00-WI SITE STABILIZATION PLAN.DWG

1.0 POTENTIAL POLLUTANT SOURCES

GIVEN THE PROPOSED ACTIVITY ON THE PROJECT SITE, THE PRIMARY POTENTIAL POLLUTANT SOURCE ASSOCIATED WITH THIS CONSTRUCTION PROJECT IS SOIL EROSION AND TRANSPORTATION; REFER TO SECTION 4 OF THIS PLAN. ADDITIONAL POTENTIAL SOURCES OF POLLUTION MAY INCLUDE: FUEL TANKS, WASTE CONTAINERS, OIL OR OTHER PETROLEUM PRODUCTS, DETERGENTS, PAINTS, CONSTRUCTION DEBRIS, SANITARY STATIONS, FERTILIZERS, AND DUST; REFER TO SECTION 5 OF THIS PLAN.

2.0 EROSION AND SEDIMENT CONTROL IMPLEMENTATION

THE FOLLOWING ARE DESCRIPTIONS OF THE EROSION AND SEDIMENT CONTROL PRACTICES THAT SHALL BE IMPLEMENTED DURING CONSTRUCTION OF THIS PROJECT. IN ADDITION TO THESE MEASURES, CONTRACTOR SHALL DISTURB ONLY AREAS NECESSARY TO COMPLETE THE CONSTRUCTION PROJECT. ALL PRACTICES SHALL BE CONDUCTED IN ACCORDANCE WITH THE BEST MANAGEMENT PRACTICES (BMP).

2.1 CONSTRUCTION AND EROSION CONTROL SEQUENCING

CONSTRUCTION SEQUENCING WILL BE UTILIZED AS A MEANS OF CONTROLLING EROSION AND LIMITING SEDIMENT TRANSPORT. SEQUENCING AS LISTED BELOW IS GENERAL IN NATURE AND MAY VARY DEPENDING ON WEATHER CONDITIONS AND/OR PHASING OF CONSTRUCTION. THE CONTRACTOR SHALL SUBMIT A DETAILED SITE SEQUENCING PLAN TO OWNER FOR APPROVAL AT LEAST 5 BUSINESS DAYS PRIOR TO COMMENCEMENT OF ANY CONSTRUCTION ACTIVITIES. CONTRACTOR MAY MODIFY SEQUENCING AFTER ITEM 6 AS NEEDED TO COMPLETE CONSTRUCTION ONLY IF EROSION CONTROLS ARE MAINTAINED IN ACCORDANCE WITH THE CONSTRUCTION SITE EROSION AND SEDIMENT CONTROL REQUIREMENTS.

1. INSTALL TEMPORARY CONSTRUCTION ENTRANCES, INLET PROTECTION ON EXISTING STORM SEWER AND CULVERT INLET LOCATIONS, AND PERIMETER SILT FENCING.
2. INSTALL SILT FENCING ALONG THE PERIMETER OF PROPOSED TOPSOIL STOCKPILE LOCATIONS. THE FIRST TOPSOIL DEPOSITED WITHIN THE STOCKPILE LIMITS SHALL BE PLACED TO CREATE TEMPORARY BERMING ALONG THE SILT FENCE TO PREVENT DIRECT STORMWATER RUNOFF AGAINST SILT FENCING. CONTRACTOR SHALL LIMIT LAND DISTURBING ACTIVITIES ASSOCIATED WITH TEMPORARY BERMING TO A MINIMUM.
3. STRIP TOPSOIL WITHIN THE LIMITS OF THE SEDIMENT TRAPS THAT WILL BE USED FOR TEMPORARY SEDIMENT CONTROL. STRIPPED TOPSOIL SHALL BE PLACED TO CONSTRUCT DIVERSION BERMING OR PLACED WITHIN THE STOCKPILE LIMITS.
4. STRIP TOPSOIL ALONG THE REMAINDER OF DIVERSION BERMING AND IMMEDIATELY PLACE TOPSOIL TO CREATE THE BERMING. MASS TOPSOIL STRIPPING SHALL NOT OCCUR UNTIL ALL DOWNSTREAM SEDIMENT CONTROLS ARE IN PLACE.
5. CONDUCT ROUGH GRADING OPERATIONS AND UTILITY PIPING INSTALLATION. DRAIN TILE SHALL NOT BE INSTALLED UNTIL UPLAND AREAS CONTRIBUTING STORMWATER RUNOFF ARE STABILIZED. DITCH CHECKS SHALL BE INSTALLED WITHIN DRAINAGE DITCHES IMMEDIATELY FOLLOWING CREATION OF DITCHES AND INLET PROTECTION SHALL BE INSTALLED TO PROTECT ANY STORM SEWER OR CULVERTS THAT WILL FUNCTION DURING CONSTRUCTION.
6. FINE GRADE SUB-GRADE SOILS WITHIN PAVEMENT AND BUILDING LIMITS, PLACE STONE BASE MATERIAL AS SOON AS POSSIBLE FOLLOWING COMPLETION OF FINE GRADING EFFORTS.
7. FINE GRADE REMAINING DISTURBED AREAS, PLACE SALVAGED TOPSOIL, EROSION BLANKETS/MATTING, AND SEED/MULCH AS SOON AS POSSIBLE FOLLOWING COMPLETION OF FINE GRADING EFFORTS.
8. EROSION CONTROLS SHALL NOT BE REMOVED UNTIL SITE IS FULLY STABILIZED OR 70% VEGETATIVE COVER IS ESTABLISHED. CONTRACTOR IS RESPONSIBLE FOR REMOVAL OF SILT FENCE, TEMPORARY FENCING/PROTECTION, DITCH CHECKS, AND OTHER TEMPORARY CONTROLS, AND RESTORATION PRACTICES AS NECESSARY, TO THE SATISFACTION OF THE OWNER.

2.2 STABILIZATION PRACTICES

THE DATES WHEN MAJOR GRADING ACTIVITIES OCCUR, WHEN CONSTRUCTION ACTIVITIES TEMPORARILY OR PERMANENTLY CEASE ON A PORTION OF THE SITE, AND WHEN STABILIZATION MEASURES ARE INITIATED, SHALL BE RECORDED ON THE STABILIZATION SCHEDULE FOR MAJOR GRADING ACTIVITIES.

STABILIZATION MEASURES SHALL BE INITIATED AS SOON AS PRACTICABLE IN PORTIONS OF THE SITE WHERE CONSTRUCTION ACTIVITIES HAVE TEMPORARILY OR PERMANENTLY CEASED. NO MORE THAN SEVEN (7) DAYS SHALL PASS AFTER THE CONSTRUCTION ACTIVITY IN THAT PORTION OF THE SITE HAS PERMANENTLY CEASED UNLESS:

THE INITIATION OF STABILIZATION MEASURES BY THE SEVENTH (7) DAY AFTER CONSTRUCTION ACTIVITY TEMPORARILY OR PERMANENTLY CEASE IS PRECLUDED BY SNOW COVER, IN THAT EVENT, STABILIZATION MEASURE SHALL BE INITIATED AS SOON AS PRACTICABLE.

CONSTRUCTION ACTIVITY WILL RESUME ON A PORTION OF THE SITE WITHIN FOURTEEN (14) DAYS FROM WHEN ACTIVITIES CEASED, (I.E. THE TOTAL TIME PERIOD THAT THE CONSTRUCTION ACTIVITY IS TEMPORARILY CEASED IS LESS THAN FOURTEEN (14) DAYS). IN THAT EVENT, STABILIZATION MEASURES DO NOT HAVE TO BE INITIATED ON THAT PORTION OF THE SITE BY THE SEVENTH (7) DAY AFTER CONSTRUCTION ACTIVITY HAS TEMPORARILY CEASED. SEE THE SOIL PROTECTION CHART PRESENTED IN THE CONSTRUCTION DOCUMENTS FOR RATES OF PERMANENT AND TEMPORARY VEGETATION.

STABILIZATION MEASURES SHALL BE DETERMINED BASED ON SITE CONDITIONS AT THE TIME CONSTRUCTION ACTIVITY HAS CEASED, INCLUDING BUT NOT LIMITED TO WEATHER CONDITIONS AND LENGTH OF TIME MEASURE MUST BE EFFECTIVE. THE FOLLOWING ARE ACCEPTABLE STABILIZATION MEASURES.

PERMANENT SEEDING; IN ACCORDANCE WITH APPROVED LANDSCAPING PLAN
TEMPORARY SEEDING MAY CONSIST OF SPRING OATS (100LBS/ACRE) AND/OR WHEAT OR CEREAL RYE (150LBS/ACRE)
HYDRO-MULCHING WITH A TACKIFIER
GEOTEXTILE EROSION MATTING
SODDING

2.3 STRUCTURAL PRACTICES

THE FOLLOWING ARE DESCRIPTIONS OF STRUCTURAL PRACTICES TO BE IMPLEMENTED TO DIVERT FLOWS FROM EXPOSED SOILS, STORE FLOWS, OR OTHERWISE LIMIT THE DISCHARGE OF POLLUTANTS FROM EXPOSED AREAS OF THE SITE INCLUDING THE PROPOSED AND EXISTING WETLAND AREAS. SUCH PRACTICES COULD INCLUDE SILT FENCE, PROTECTION FENCE, CONSTRUCTION ENTRANCE, DITCH CHECK, EROSION CONTROL MATTING, DIVERSION BERM/SWALE, SEDIMENT TRAP, LEVEL SPREADER, INLET PROTECTION, OUTLET PROTECTION, AND TEMPORARY OR PERMANENT SEDIMENT BASIN. THE FOLLOWING STRUCTURAL PRACTICES ARE TO BE UTILIZED DURING THIS PROJECT.

SILT FENCE SHALL BE PLACED DOWN SLOPE OF DISTURBED AREAS OF THE CONSTRUCTION SITE AND AROUND THE PERIMETER OF THE TOPSOIL STOCKPILE. THIS INCLUDES PROTECTION OF EXISTING WETLAND AREAS TO BE MAINTAINED. SILT FENCE MAY ALSO BE USED AS A TEMPORARY CONTROL DEVICE WHERE SEDIMENTATION RUNOFF IS DISCOVERED.

CONSTRUCTION ENTRANCE SHALL BE INSTALLED TO REDUCE SOIL EROSION POLLUTANTS FROM LEAVING THE SITE DURING CONSTRUCTION ACTIVITIES. IF THE CRUSHED STONE DOES NOT ADEQUATELY REMOVE MUD FROM VEHICLE TIRES, THEY SHALL BE HOSED OFF BEFORE ENTERING A PAVED ROADWAY. ANY SOIL DEPOSITED ON THE PUBLIC PAVED ROAD WAY SHALL BE REMOVED IMMEDIATELY.

DITCH CHECK (STRAW BALES) SHALL BE INSTALLED IN DRAINAGE CHANNELS AS NEEDED.

EROSION CONTROL MATTING SHALL BE PLACED ON AREAS OR EMBANKMENTS HAVING SLOPES GREATER THAN OR EQUAL TO 3H:1V, BEFORE VEGETATION IS ESTABLISHED.

DIVERSION BERM/SWALE SHALL BE CONSTRUCTED TO DIVERT RUNOFF AROUND THE SITE AND TO DIVERT RUNOFF FROM THE DISTURBED AREA TO A SEDIMENT TRAP OR OTHER CONTROL. BERMS/SWALES SHALL BE STABILIZED WITH EQUIPMENT TRACKING AND TEMPORARY SEEDING.

SEDIMENT TRAPS/BASIN SHALL BE CONSTRUCTED TO COLLECT RUNOFF AND RUNOFF FROM SITE DIVERSION BERMS/SWALES.

INLET PROTECTION SHALL BE INSTALLED AT STORMWATER DRAINAGE INLETS TO REDUCE SEDIMENT WITHIN STORM SEWER CONVEYANCE FEATURES.

OUTLET SCOUR PROTECTION SHALL BE INSTALLED AT STORMWATER DRAINAGE OUTLETS TO DIFFUSE FLOWS.

3.0 ADDITIONAL PRACTICES

ADDITIONAL POLLUTANT CONTROL MEASURES TO BE IMPLEMENTED DURING CONSTRUCTION ACTIVITIES SHALL INCLUDE, BUT NOT BE LIMITED TO THE FOLLOWING.

CONSTRUCTION WASTE SHALL BE PROPERLY DISPOSED OF. THIS INCLUDES ALL CONSTRUCTION SITE WASTE MATERIAL, SANITARY WASTE, AND WASTE FROM VEHICLE TRACKING OF SEDIMENTS. THE CONTRACTOR SHALL ENSURE THAT NO MATERIAL WASTES OR UNUSED BUILDING MATERIALS SHALL BE BURIED, DUMPED, BURNED, OR DISCHARGED TO THE WATERS OF THE STATE. VEHICLES HAULING MATERIAL AWAY FROM THE SITE SHALL BE COVERED WITH A TARPAULIN TO PREVENT BLOWING DEBRIS.

DUST CONTROL SHALL BE ACCOMPLISHED BY ONE OR MORE OF THE FOLLOWING METHODS:

COVERING 30% OR MORE OF THE SOIL SURFACE WITH A NON-ERODIBLE MATERIAL.

ROUGHENING (EQUIPMENT TRACKING) THE SOIL TO PRODUCE RIDGES PERPENDICULAR TO THE PREVAILING WIND. RIDGES SHALL BE AT LEAST SIX (6) INCHES IN HEIGHT.

FREQUENT WATERING OF EXCAVATION AND FILL AREAS.

PROVIDING GRAVEL OR PAVING AT ENTRANCE/EXIT DRIVES, PARKING AREAS AND TRANSIT PATHS.

STREET SWEEPING SHALL BE PERFORMED TO IMMEDIATELY REMOVE ANY SEDIMENT TRACKED ON PAVEMENTS.

4.0 EROSION AND SEDIMENT STRUCTURAL PRACTICE MAINTENANCE

THE FOLLOWING MAINTENANCE PRACTICES SHALL BE USED TO MAINTAIN, IN GOOD AND EFFECTIVE OPERATING CONDITIONS, VEGETATION, EROSION AND SEDIMENT CONTROL MEASURES, AND OTHER PROTECTIVE MEASURES IDENTIFIED IN THIS PLAN. UPON IDENTIFICATION, DEFICIENCIES IN STORMWATER CONTROLS SHALL BE ADDRESSED IMMEDIATELY. THE MAINTENANCE PROCEDURES FOR THIS DEVELOPMENT SHALL INCLUDE, BUT NOT BE LIMITED TO THE BELOW.

SILT FENCE - REPAIR OR REPLACE ANY DAMAGED FILTER FABRIC AND/OR STAKES. REMOVE ACCUMULATED SEDIMENT WHEN IT HAS REACHED ONE-HALF THE ABOVE GROUND HEIGHT OF THE FENCE.

CONSTRUCTION ENTRANCE - AS NEEDED, ADD STONE TO MAINTAIN CONSTRUCTION ENTRANCE DIMENSIONS AND EFFECTIVENESS.

DITCH CHECK (STRAW BALES) - RE-SECURE STAKES; ADJUST OR REPOSITION BALES TO ADDRESS PROPER FLOW OF STORMWATER; AND REMOVE ACCUMULATED SEDIMENT WHEN IT HAS REACHED ONE-HALF THE HEIGHT OF THE BALE.

EROSION CONTROL MATTING - REPAIR MATTING IMMEDIATELY IF INSPECTION REVEALS BREACHED OR FAILED CONDITIONS. REPAIR AND RE-GRADE SOIL WHERE CHANNELIZATION HAS OCCURRED.

DIVERSION BERM/SWALE - REPLACE OR RE-COMPACT THE CONSTRUCTION MATERIALS AS NECESSARY.

SEDIMENT TRAP - REMOVE AND DISPOSE OF THE ACCUMULATED SEDIMENT WHEN IT HAS REACHED THE SEDIMENT STORAGE ELEVATION.

INLET PROTECTION - CLEAN, REPAIR OR REPLACE FILTER FABRIC AND/OR STONE WHEN CONTROL MEASURE IS CLOGGED. INLET FILTER BAGS SHALL BE REPLACED ONCE ONE-HALF FULL OF SEDIMENT.

OUTLET PROTECTION - CLEAN, REPAIR OR REPLACE FILTER FABRIC, TURF REINFORCEMENT MATTING AND/OR STONE WHEN CONTROL MEASURE IS ONE-HALF FULL OF SEDIMENT.

SEDIMENT BASIN - AT THE END OF CONSTRUCTION, CONTRACTOR SHALL REMOVE AND DISPOSE OF THE ACCUMULATED SEDIMENT AND RESTORE BASIN AREA TO INTENDED POST-CONSTRUCTION DESIGN GRADES.

5.0 INSPECTION

INSPECTIONS SHALL BE COMPLETED WITHIN TWENTY-FOUR (24) HOURS OF THE END OF A RAINFALL EVENT THAT IS ONE-HALF INCH OR GREATER OR EQUIVALENT SNOWFALL, OR AT A MINIMUM ONCE EVERY SEVEN (7) CALENDAR DAYS. INSPECTIONS SHALL BE UNDERTAKEN BY QUALIFIED PERSONNEL PROVIDED BY THE CONTRACTOR, AND SHALL INCLUDE: DISTURBED AREAS OF THE CONSTRUCTION SITE THAT HAVE NOT BEEN FINALLY STABILIZED, STRUCTURAL CONTROL MEASURES, AND LOCATIONS WHERE VEHICLES ENTER OR EXIT THE SITE. A STORMWATER POLLUTION PREVENTION PLAN INSPECTION REPORT SHALL BE COMPLETED AND ADDED TO THE SWPPP. RAINFALL SHALL BE RECORDED ON THE SWPPP RAINFALL LOG. CONTRACTOR SHALL IMMEDIATELY ARRANGE FOR REPAIR OR REPLACEMENT OF ANY DAMAGED OR DEFICIENT CONTROL MEASURES OBSERVED DURING THE INSPECTION.

QUALIFIED PERSONNEL MEANS A PERSON KNOWLEDGEABLE IN THE PRINCIPLES AND PRACTICES OF EROSION AND SEDIMENT CONTROL MEASURES, SUCH AS A LICENSED PROFESSIONAL ENGINEER, A CERTIFIED PROFESSIONAL IN EROSION AND SEDIMENT CONTROL, A CERTIFIED EROSION SEDIMENT OR STORMWATER INSPECTOR, OR OTHER TRAINED INDIVIDUAL.

6.0 SPILL PREVENTION

6.1 GENERAL MATERIAL MANAGEMENT PRACTICES

THE GOOD HOUSEKEEPING PRACTICES LISTED BELOW SHALL BE FOLLOWED THROUGHOUT THE CONSTRUCTION PROJECT.

1. CONTRACTOR SHALL STORE ONLY ENOUGH PRODUCTS REQUIRED TO COMPLETE THIS PROJECT.
2. ALL MATERIAL SHALL BE STORED IN A NEAT, ORDERLY MANNER IN THEIR ORIGINAL CONTAINERS CONTAINING MANUFACTURER'S LABEL.
3. MANUFACTURERS' RECOMMENDATIONS FOR PROPER USE AND DISPOSAL SHALL BE FOLLOWED.
4. MATERIALS REQUIRED TO HAVE A MATERIAL SAFETY DATA SHEET (MSDS) SHALL HAVE A COPY STORED IN THE PROJECT'S MSDS DATABASE.

6.2 SPILL CONTROL PRACTICES

THE PRACTICES LISTED BELOW SHALL BE FOLLOWED FOR SPILL PREVENTION AND CLEANUP.

1. MATERIALS AND EQUIPMENT NECESSARY FOR SPILL CLEANUP SHALL BE MAINTAINED ONSITE.
2. IMMEDIATELY UPON DISCOVERY, ALL SPILLS SHALL BE CLEANED UP ACCORDING TO THE MANUFACTURERS' RECOMMENDED METHODS.
3. PERSONNEL CLEANING UP A SPILL SHALL USE PERSONAL PROTECTIVE EQUIPMENT.
4. IMMEDIATELY UPON DISCOVERY, SPILLS OF TOXIC OR HAZARDOUS MATERIALS SHALL BE REPORTED TO THE OWNER AND GENERAL CONTRACTOR.
5. NOTIFICATION AND REPORTING TO THE APPROPRIATE FEDERAL, STATE, AND LOCAL GOVERNMENT AGENCIES SHALL BE MADE AS REQUIRED.

GENERAL INFORMATION:

THIS STORMWATER POLLUTION PREVENTION PLAN (SWPPP) HAS BEEN DEVELOPED TO FULFILL ONE OF THE REQUIREMENTS OF THE GENERAL ENVIRONMENTAL PROTECTION AGENCY (EPA) NATIONAL POLLUTION DISCHARGE ELIMINATION SYSTEM (WISCONSIN POLLUTION DISCHARGE ELIMINATION SYSTEM "WPDES" PERMIT NO. WI-S067831-4) FOR THE DISCHARGE OF STORMWATER ASSOCIATED WITH CONSTRUCTION PROJECTS DISTURBING ONE ACRE OR MORE. THE OWNER AND CONTRACTORS SHALL COMPLY WITH ALL REQUIREMENTS OF THE WPDES FOR ALL SUCH CONSTRUCTION PROJECTS. THE STORMWATER DISCHARGES ASSOCIATED WITH THE CONSTRUCTION ACTIVITY FROM THIS SITE ARE SUBJECT TO THE CONDITIONS AND REQUIREMENTS OF THE PERMITS.

THE EXECUTED OWNER CERTIFICATION AND THE CONTRACTOR CERTIFICATIONS SHALL BE KEPT ONSITE WITH THE APPROVED PLANS.

SWPPP AVAILABILITY:

THE OWNER SHALL RETAIN A COPY OF THE SWPPP AT THE CONSTRUCTION SITE FROM THE DATE OF THE PROJECT INITIATION TO THE DATE OF FINAL STABILIZATION.

KEEPING PLANS CURRENT:

THE CONTRACTOR SHALL AMEND THE PLAN WHENEVER THERE IS A CHANGE IN DESIGN, CONSTRUCTION, OPERATION, OR MAINTENANCE, WHICH HAS A SIGNIFICANT EFFECT ON THE POTENTIAL FOR THE DISCHARGE OF POLLUTANTS TO THE WATERS OF THE STATE AND WHICH HAS NOT OTHERWISE BEEN ADDRESSED IN THE PLAN OR IF THE PLAN PROVES TO BE INEFFECTIVE IN ELIMINATING OR SIGNIFICANTLY CONTROLLING POLLUTANTS IN STORMWATER DISCHARGES ASSOCIATED WITH CONSTRUCTION SITE ACTIVITY. IN ADDITION, THE THE PLAN SHALL BE AMENDED TO IDENTIFY ANY NEW CONTRACTOR AND/OR SUBCONTRACTOR THAT WILL IMPLEMENT A MEASURE OF THE PLAN. AMENDMENTS TO THE PLAN MAY BE REQUIRED BY THE MUNICIPALITY, OWNER, OR OTHER REVIEWING AGENCY. COPIES OF THE AMENDMENTS SHALL BE KEPT ONSITE AS PART OF THE SWPPP.

RETENTION OF RECORDS:

THE OWNER SHALL RETAIN COPIES OF THIS AND ALL REPORTS AND NOTICES REQUIRED BY THIS PERMIT, AND RECORDS OF ALL DATA USED TO COMPLETE THE NOTICE OF INTENT TO BE COVERED BY THIS PERMIT, FOR A PERIOD OF AT LEAST THREE YEARS FROM THE DATE PERMIT COVERAGE EXPIRES OR IS TERMINATED. THIS PERIOD MAY BE EXTENDED BY THE REQUEST OF THE AGENCY AT ANY TIME. IN ADDITION, THE OWNER SHALL RETAIN A COPY OF THE PLAN REQUIRED BY THIS PERMIT AT THE CONSTRUCTION SITE FROM THE DATE OF PROJECT INITIATION TO THE DATE OF FINAL STABILIZATION.

A NOTICE OF INTENT (NOI) APPLICATION MUST BE COMPLETED AND INCORPORATED INTO THE SWPPP.

WPDES NOTICE OF TERMINATION GUIDANCE:

WHEN A SITE HAS BEEN FINALLY STABILIZED AND ALL STORMWATER DISCHARGES FROM CONSTRUCTION SITES THAT ARE AUTHORIZED BY THE PERMIT ARE ELIMINATED, THE OWNER OF THE FACILITY MUST SUBMIT A COMPLETED NOTICE OF TERMINATION THAT IS SIGNED IN ACCORDANCE WITH THE PERMIT. CONTRACTOR SHALL SUBMIT A COMPLETED NOTICE OF TERMINATION TO OWNER FOR EXECUTION PRIOR TO THEIR FINAL PAY APPLICATION REQUEST.

CONTROL MEASURE GROUP	CONTROL MEASURE	CONTROL MEASURE CHARACTERISTICS
VEGETATIVE SOIL COVER	TEMPORARY SEEDING	PROVIDES QUICK TEMPORARY COVER TO CONTROL EROSION WHEN PERMANENT SEEDING IS NOT DESIRED OR TIME OF YEAR IS INAPPROPRIATE.
	PERMANENT SEEDING	PROVIDES PERMANENT VEGETATIVE COVER TO CONTROL EROSION. FILTERS SEDIMENT FROM WATER. MAY BE PART OF FINAL LANDSCAPE PLAN.
NON VEGETATIVE SOIL COVER	AGGREGATE COVER	PROVIDES TEMPORARY COVER ON ROADS AND PARKING LOTS AND AREAS WHERE VEGETATION CANNOT BE ESTABLISHED. PREVENTS MUD FROM BEING PICKED UP AND TRANSPORTED OFF-SITE.
	PAVING	PROVIDES PERMANENT COVER ON PARKING LOTS AND ROADS OR OTHER AREAS WHERE VEGETATION CANNOT BE ESTABLISHED.
DIVERSIONS	DIVERSION BERM / SWALE	DIVERTS RUNOFF TO A SEDIMENT TRAP OR OTHER CONTROL.
ENCLOSED DRAINAGE	STORM SEWER	CONVEYS SEDIMENT LADEN WATER TO A SEDIMENT BASIN.
OUTLETS	APRON ENDWALL OR RIPRAP	PROTECTS DOWNSTREAM CHANNEL FROM HIGH VELOCITY OF FLOW DISCHARGING FROM STRUCTURE.
SEDIMENT BASINS	TEMPORARY SEDIMENT TRAP	CONSTRUCTED TO REMOVE SILTATION FROM RUNOFF FROM SITE DIVERSION BERMS/SWALES AND IN OVERLAND FLOOD ROUTE. CAN BE CONVERTED TO PERMANENT SEDIMENT BASIN.
SEDIMENT FILTERS	SILT FENCE	PLACED DOWN SLOPE OF DISTURBED AREA TO KEEP RUNOFF CONTAINED ON-SITE.
	INLET PROTECTION	INSTALLED IN OPEN GRATE STRUCTURES TO COLLECT SEDIMENT.
	DITCH CHECK	PLACED IN DRAINAGE CHANNELS TO FILTER SEDIMENT FROM RUNOFF.
MUD AND DUST CONTROL	CONSTRUCTION ENTRANCE	REDUCES SOIL EROSION POLLUTANTS BEING TRANSPORTED OFF-SITE.
	STREET SWEEPING	REDUCES POLLUTANTS TRACKED FROM CONSTRUCTION SITE.
	DUST CONTROL	PREVENTS DUST FROM LEAVING CONSTRUCTION SITE.

STABILIZATION EFFECTIVENESS (TIME OF YEAR)

STABILIZATION TYPE	STABILIZATION UTILIZATION PERIODS											
	JAN.	FEB.	MAR.	APR.	MAY	JUNE	JULY	AUG.	SEPT.	OCT.	NOV.	DEC.
PERMANENT SEEDING			A	*	*	*	*	*	*			
DORMANT SEEDING	B										B	
TEMPORARY SEEDING			C	*	*	*	D *	*	*			
SODDING			E	*	*	*	*	*	*			

A. KENTUCKY BLUEGRASS 90 LBS/ACRE MIXED WITH PERENNIAL RYEGRASS 30 LBS/ACRE.
B. KENTUCKY BLUEGRASS 135 LBS/ACRE MIXED WITH PERENNIAL RYEGRASS 45 LBS/ACRE + 2 TONS STRAW MULCH/ACRE.
C. SPRING OATS 100 LBS/ACRE.
D. WHEAT OR CEREAL RYE 150 LBS/ACRE.
E. SOD.
F. STRAW MULCH 2 TONS/ACRE.
* IRRIGATION/WATERING REQUIRED TO SUPPORT ESTABLISHMENT AS NEEDED.

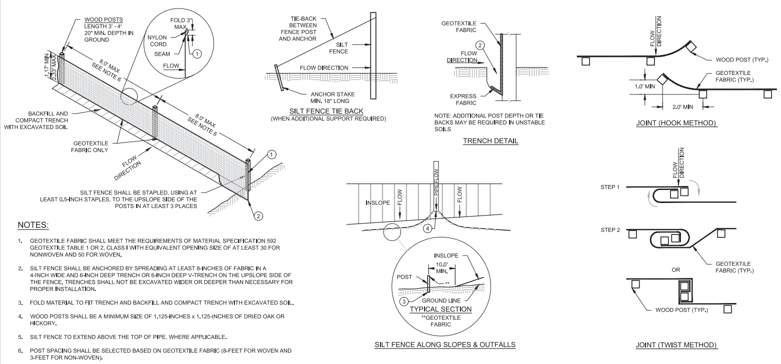

NOTES:

1. GEOTEXTILE FABRIC SHALL MEET THE REQUIREMENTS OF MATERIAL SPECIFICATION 592 GEOTEXTILE TABLE 1 OR 2, CLASS I WITH EQUIVALENT OPENING SIZE OF AT LEAST 30 FOR NONWOVEN AND 50 FOR WOVEN.
2. SILT FENCE SHALL BE ANCHORED BY SPREADING AT LEAST 8-INCHES OF FABRIC IN A 4-INCH WIDE AND 6-INCH DEEP TRENCH OR 6-INCH DEEP V-TRENCH ON THE UPSLOPE SIDE OF THE FENCE. TRENCHES SHALL NOT BE EXCAVATED WIDER OR DEEPER THAN NECESSARY FOR PROPER INSTALLATION.
3. FOLD MATERIAL TO FIT TRENCH AND BACKFILL AND COMPACT TRENCH WITH EXCAVATED SOIL.
4. WOOD POSTS SHALL BE A MINIMUM SIZE OF 1.125-INCHES x 1.125-INCHES OF DRIED OAK OR HICKORY.
5. SILT FENCE TO EXTEND ABOVE THE TOP OF PIPE, WHERE APPLICABLE.
6. POST SPACING SHALL BE SELECTED BASED ON GEOTEXTILE FABRIC (8-FEET FOR WOVEN AND 3-FEET FOR NON-WOVEN).

SILT FENCE

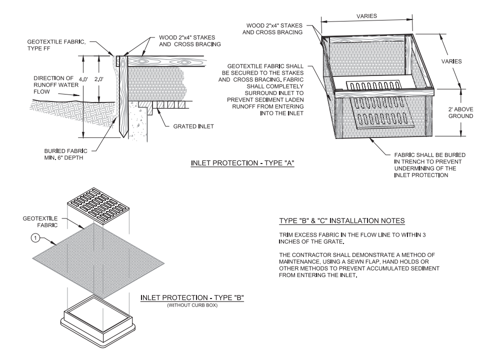

TYPE "B" & "C" INSTALLATION NOTES

TRIM EXCESS FABRIC IN THE FLOW LINE TO WITHIN 3 INCHES OF THE GRATE.

THE CONTRACTOR SHALL DEMONSTRATE A METHOD OF MAINTENANCE, USING A SEWN FLAP, HAND HOLDS OR OTHER METHODS TO PREVENT ACCUMULATED SEDIMENT FROM ENTERING THE INLET.

NOTES:

1. GEOTEXTILE FABRIC SHALL MEET THE REQUIREMENTS OF MATERIAL SPECIFICATION 592 GEOTEXTILE TABLE 1 OR 2, CLASS I, WITH AN EOS OF AT LEAST 30 FOR NONWOVEN AND 50 FOR WOVEN.
2. WHEN REMOVING OR MAINTAINING INLET PROTECTION, CARE SHALL BE TAKEN SO THAT THE SEDIMENT TRAPPED ON THE GEOTEXTILE FABRIC DOES NOT FALL INTO THE INLET. ANY MATERIAL FALLING INTO THE INLET SHALL BE REMOVED IMMEDIATELY.

(1) FINISHED SIZE, INCLUDING FLAP POCKET WHERE REQUIRED, SHALL EXTEND A MINIMUM OF 10 INCHES AROUND THE PERIMETER TO FACILITATE MAINTENANCE OR REMOVAL.
(2) FOR INLET PROTECTION, TYPE "C" (WITH CURB BOX), AN ADDITIONAL 18 INCHES OF FABRIC IS WRAPPED AROUND THE WOOD AND SECURED WITH STAPLES. THE WOOD SHALL NOT BLOCK THE ENTIRE HEIGHT OF THE CURB BOX OPENING.
(3) FLAP POCKETS SHALL BE LARGE ENOUGH TO ACCEPT WOOD 2x4.

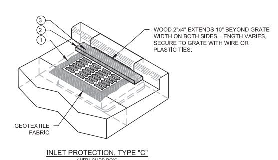

INLET PROTECTION

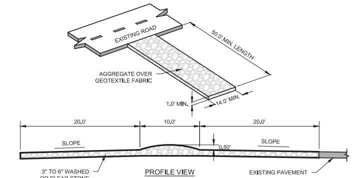

NOTES:

1. ALL TRACKING PAD MATERIALS AND INSTALLATION SHALL BE IN CONFORMANCE WITH WI DNR TECHNICAL STANDARD 1057.
2. TRACKING PADS SHALL BE INSTALLED PRIOR TO ANY TRAFFIC LEAVING THE SITE. CONTRACTOR SHALL VERIFY LOCATION WITH OWNER.
3. THE AGGREGATE FOR TRACKING PADS SHALL BE 3 TO 6 INCH CLEAR OR WASHED STONE. ALL MATERIALS TO BE RETAINED ON A 3-INCH SIEVE.
4. THE AGGREGATE SHALL BE PLACED IN A LAYER AT LEAST 12-INCHES THICK. ON SITES WHERE SATURATED CONDITIONS ARE EXPECTED DURING THE LIFE OF THE PAD, THE PAD SHALL BE UNDERLAIN WITH GEOTEXTILE FABRIC WHICH MEETS MATERIAL SPECIFICATION 592 GEOTEXTILE, TABLE 1 OR 2, CLASS I, II OR IV, TO PREVENT MIGRATION OF UNDERLYING SOILS INTO THE STONE LAYER.
5. THE TRACKING PAD SHALL BE THE FULL WIDTH OF THE EGRESS POINT. MINIMUM WIDTH IS 14 FEET FOR ONE-WAY TRAFFIC AND 20 FEET FOR TWO-WAY TRAFFIC, WITH AN ADDITIONAL INCREASE OF 4 FEET FOR TRAILER TRAFFIC. THE TRACKING PAD SHALL BE A MINIMUM 50-FEET LONG.
6. ANY SEDIMENT TRACKED ONTO A PUBLIC OR PRIVATE ROAD SHOULD BE REMOVED BY STREET CLEANING, NOT FLUSHING, AT THE END OF EACH WORKING DAY.
7. TRACKING PADS SHALL, AT A MINIMUM, BE INSPECTED WEEKLY AND WITHIN 24-HOURS AFTER EVERY PRECIPITATION EVENT THAT PRODUCES 0.5-INCHES OF RAIN OR MORE DURING A 24-HOUR PERIOD.
8. THE TRACKING PAD PERFORMANCE SHALL BE MAINTAINED BY SCRAPING OR TOP-DRESSING WITH ADDITIONAL AGGREGATE.

CONSTRUCTION ENTRANCE

PLAN I DESIGN I DELIVER
www.pinnacle-engr.com
PINNACLE ENGINEERING GROUP
ENGINEERING I NATURAL RESOURCES I SURVEYING
WISCONSIN OFFICE:
20725 WATERTOWN ROAD
BROOKFIELD, WI 53186
(262) 754-8888
CHICAGO I MILWAUKEE : NATIONWIDE

FRAME PARK COMMONS

WAUKESHA, WI

CONSTRUCTION DETAILS

REVISIONS

PEG JOB No. 1545.00-WI
PEG PM MAC
START DATE 08/20/2019
SCALE

SHEET
C-8
C-11

© COPYRIGHT 2018

THESE PLANS AND DESIGNS ARE COPYRIGHT PROTECTED AND MAY NOT BE USED IN WHOLE OR IN PART WITHOUT THE WRITTEN CONSENT OF PINNACLE ENGINEERING GROUP, LLC

REVIEWED: MAC DESIGNED: DO DRAFTED: JIG

Z:\PROJECTS\2018\1545.00-WI\CAD\SHEETS\1545.00-WI CONSTRUCTION DETAILS.DWG

FOR REVIEW ONLY

THESE PLANS AND DESIGNS ARE COPYRIGHT PROTECTED AND MAY NOT BE USED, IN WHOLE OR IN PART, WITHOUT THE WRITTEN CONSENT OF PINNACLE ENGINEERING GROUP, LLC

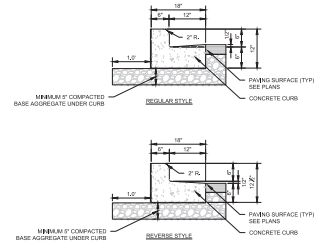

NOTES:

1. LATERAL CONTRACTION JOINTS SHALL BE PLACED AT INTERVALS OF NOT MORE THAN 15 FEET NOR LESS THAN 6 FEET. THE JOINTS SHALL BE A MINIMUM OF 3 INCHES IN DEPTH.
2. EXPANSION JOINTS SHALL BE PLACED TRANSVERSELY AT RADIUS POINTS ON CURVES OF RADIUS 200 FEET OR LESS, AND AT ANGLE POINTS, OR AS DIRECTED BY THE ENGINEER OF RECORD. THE EXPANSION JOINTS FILLER SHALL BE A ONE PIECE RIBERBOARD OR THE APPROVED EQUIVALENT MATERIAL HAVING THE SAME DIMENSIONS AS CURB & GUTTER AT THAT STATION AND BE 0.5 INCH THICK.
3. IN ALL CASES, CONCRETE CURB & GUTTER SHALL BE PLACED ON THOROUGHLY COMPACTED CRUSHED STONE.
4. REVERSE STYLE CURB LOCATIONS ARE NOTED ON THE PLANS.

18" VERTICAL FACE CURB

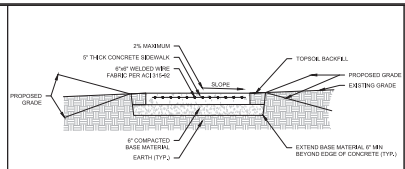

CONCRETE SIDEWALK

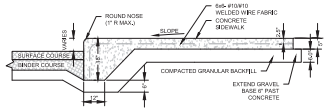

INTEGRAL CURB AND SIDEWALK

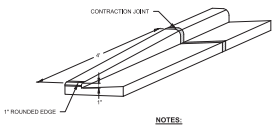

NOTES:

1. CONTRACTION JOINTS SHALL BE PLACED EVERY 10 FEET
2. EXPANSION JOINTS (3/4" EXPANSION FIBER MATERIAL) SHALL BE PLACED EVERY 300 FEET AND AT EVERY PC/PT AND 3 FEET FROM STRUCTURES

TAPER CURB HEAD

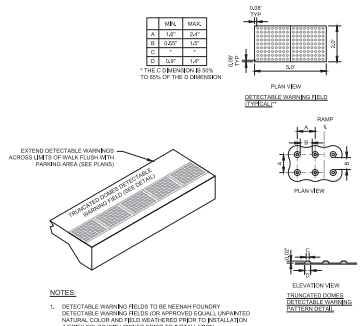

NOTES:

1. DETECTABLE WARNING FIELDS TO BE NEENAH FOUNDRY DETECTABLE WARNING FIELDS (OR APPROVED EQUAL), UNPAINTED NATURAL COLOR AND FIELD WEATHERED PRIOR TO INSTALLATION (VERIFY COLOR WITH OWNER PRIOR TO INSTALLATION.

DETECTABLE WARNING TRUNCATED DOMES

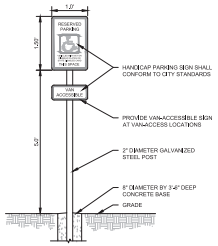

ADA SIGN

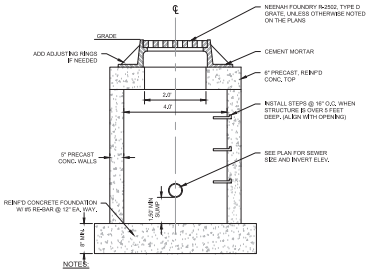

NOTES:

1. EASY STICK, RUBBER GASKET OR APPROVED EQUIVALENT SHALL BE PLACED AT ALL JOINTS BETWEEN ADJUSTING RINGS FOR STORM CATCH BASINS.
2. THE FLAT TOP MAY BE USED IN LIEU OF THE TAPERED TOP WHEN FIELD CONDITIONS PROHIBIT USE OF A TAPERED TOP.
3. STRUCTURE TO BE 4.0' DIA. OR AS INDICATED ON THE PLANS.

CATCH BASIN

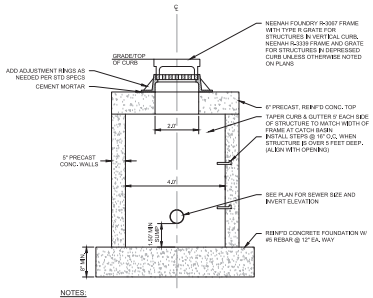

NOTES:

1. EASY STICK, RUBBER GASKET OR APPROVED EQUIVALENT SHALL BE PLACED AT ALL JOINTS BETWEEN ADJUSTING RINGS FOR STORM CATCH BASINS.
2. THE FLAT TOP MAY BE USED IN LIEU OF THE TAPERED TOP WHEN FIELD CONDITIONS PROHIBIT USE OF A TAPERED TOP.
3. STRUCTURES TO BE 4' DIA. OR AS INDICATED ON THE PLANS.

CATCH BASIN - CURB

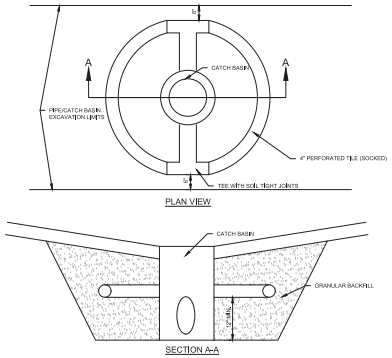

CATCH BASIN - UNDERDRAIN

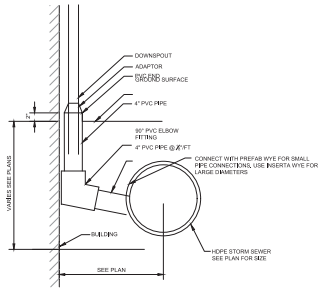

DOWNSPOUT DRAIN BUILDING CONNECTION

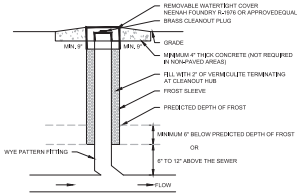

STORM CLEANOUT

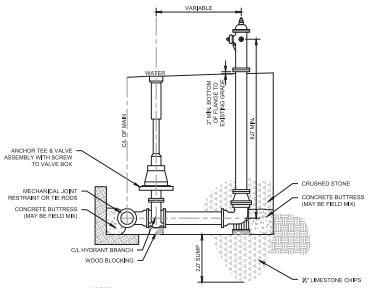

NOTES:

1. MEGALUG RESTRAINING GLANDS ON ALL MECHANICAL JOINTS. THE BOLTS & NUTS ARE TO BE HIGH STRENGTH LOW ALLOY STEEL (CORTEN) AS PER SECTION 11.A.5 OF AJW.VLA. C-111.
2. THE FOLLOWING HYDRANTS SHALL BE ALLOWED:

MUELLER SUPER CENTURION 250 5-WAY FIRE HYDRANT
U.S. PIPE METROPOLITAN / M-94 DUCTILE IRON FIRE HYDRANT
WATEROUS 5½" PACER FIRE HYDRANT

FIRE HYDRANT

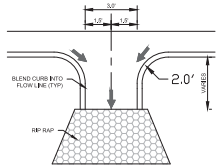

NOTES:

1. PITCH CONCRETE AT 2% FROM FLOW LINE OF GUTTER SECTION TO C/L OF FLUME.

CONCRETE FLUME

DRAFTED: JG DESIGNED: DD REVIEWED: MAC

PLAN | DESIGN | DELIVER
www.pinnacle-engr.com

PINNACLE ENGINEERING GROUP
ENGINEERING | NATURAL RESOURCES | SURVEYING

WISCONSIN OFFICE:
20735 WATERTOWN ROAD
BROOKFIELD, WI 53186
(262) 754-8888
CHICAGO | MILWAUKIE | NATIONWIDE

FRAME PARK COMMONS

WAUKESHA, WI

CONSTRUCTION DETAILS

REVISIONS

PROJ. ID# 1545.00-WI
PROJ. MGR. MAC
START DATE 05/20/2019
SCALE

SHEET
C-9
C-11

COORDINATE SYSTEM

CONSTRUCTION DETAILS

FOR REVIEW ONLY

www.pinnacle-engr.com

Z:\PROJECTS\2018\1545.00-WI\CAD\SHEETS\1545 CONSTRUCTION DETAILS.DWG

THESE PLANS AND DESIGNS ARE COPYRIGHT PROTECTED AND MAY NOT BE USED, IN WHOLE OR IN PART, WITHOUT THE WRITTEN CONSENT OF PINNACLE ENGINEERING GROUP, LLC

DRAFTED: JG DESIGNED: DD REVIEWED: MAC

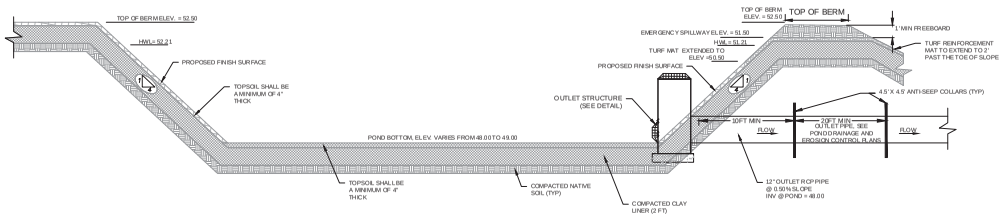

GENERAL NOTES:

1. ALL CONSTRUCTION SHALL MEET THE SPECIFICATIONS OF WDNR TECHNICAL STANDARDS.
2. ALL WORK TO BE CONDUCTED IN CONFORMANCE WITH THE STORM WATER MANAGEMENT PLAN FOR THE PROJECT SITE AS APPROVED BY THE REGULATORY ENGINEER OF RECORD.
3. RCP PIPING & INSTALLATION WITHIN THE BASIN SHALL HAVE RUBBER GASKETS
4. OWNER OR CONTRACTOR MUST CONSULT LANDSCAPE ARCHITECT OR ECOLOGICAL PLANNING AGENCY FOR APPROPRIATE PLANTS AND PLANTING CONFIGURATIONS.
5. CLAY LINER SHALL BE A MINIMUM OF 2 FEET THICK. CLAY SHALL BE COMPACTED AT ±2.0% OPTIMAL MOISTURE CONTENT TO 90% MODIFIED PROCTOR. MEDIUM STIFF TO STIFF CLAYS PRESENT IN PLACE AT THE POND SIDE SLOPES OR OTHER ONSITE MEDIUM STIFF TO STIFF CLAYS MAY BE USED AT THE DISCRETION OF THE GEOTECHNICAL ENGINEER OF RECORD.

STORMWATER EAST DRY POND CROSS SECTION

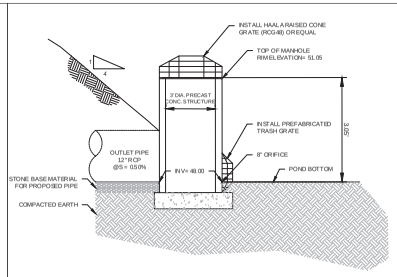

POND OUTLET STRUCTURE

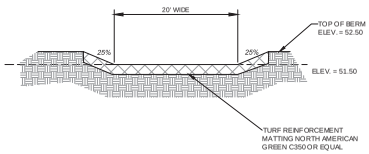

NOTES:

1. EXTEND MATTING 2' BELOW THE ELEVATION OF THE EMERGENCY SPILLWAY ON THE INSIDE OF THE POND.
2. EXTEND MATTING TO TOE OF SLOPE ON THE OUTSIDE OF THE POND.
3. MATTING SHALL BE INSTALLED IN ACCORDANCE WITH WDNR TECH STANDARD 1052.

EMERGENCY SPILLWAY

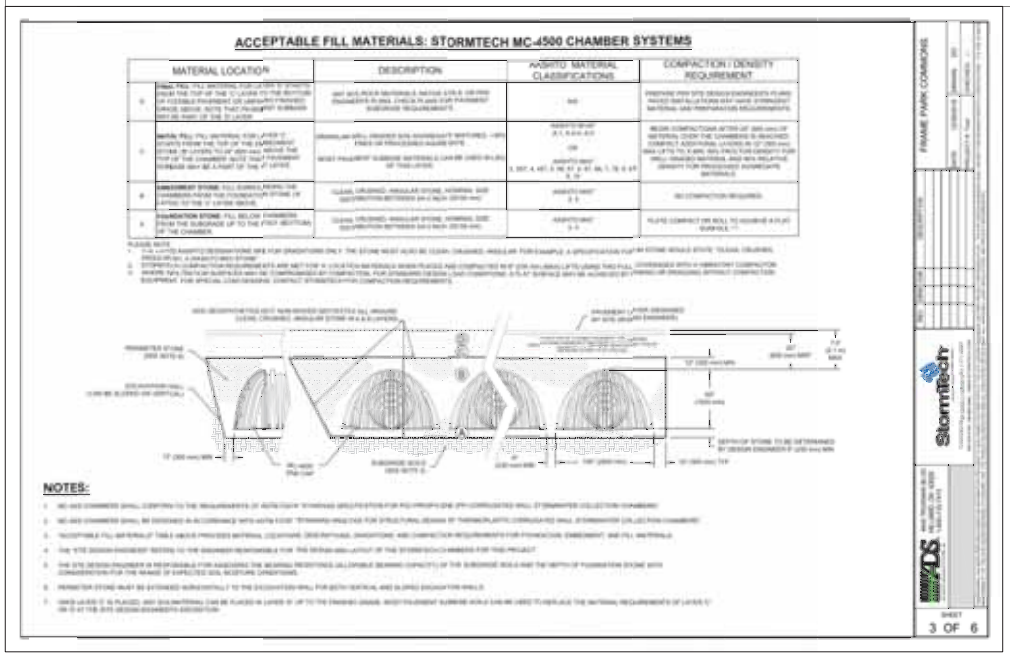

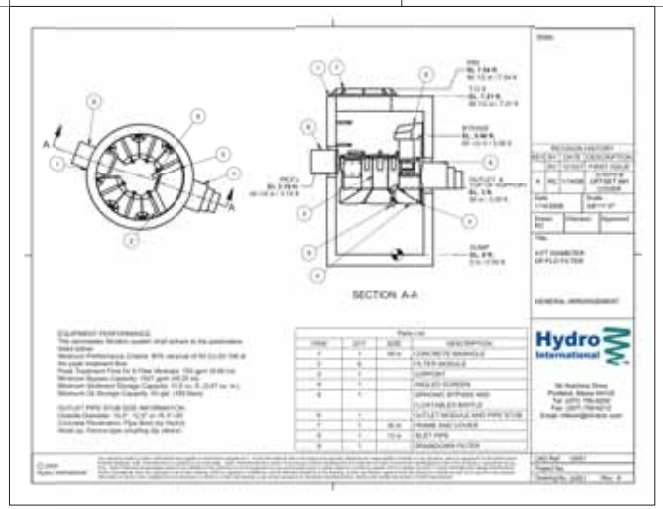

FOR REVIEW ONLY

CONSTRUCTION DETAILS

www.pinnacle-engr.com

PLAN | DESIGN | DELIVER
www.pinnacle-engr.com

PINNACLE ENGINEERING GROUP
ENGINEERING | NATURAL RESOURCES | SURVEYING

WISCONSIN OFFICE:
20735 WATERTOWN ROAD
BROOKFIELD, WI 53186
(262) 754-8888
CHICAGO | MILWAUKIE | NATIONWIDE

FRAME PARK COMMONS

WAUKESHA, WI

CONSTRUCTION DETAILS

REVISIONS

PEG JOB No. 1545.00-WI
PEG PM MAC
START DATE 05/20/2013
SCALE

SHEET
C-10
C-11

COPYRIGHT © 2014

Z:\PROJECTS\2018\1545.00-WI\CAD\SHEETS\15-45.00-WI CONSTRUCTION DETAILS.DWG

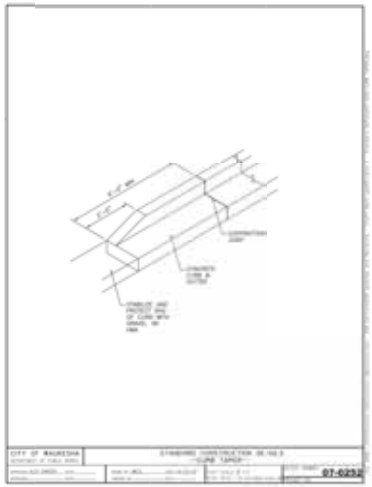

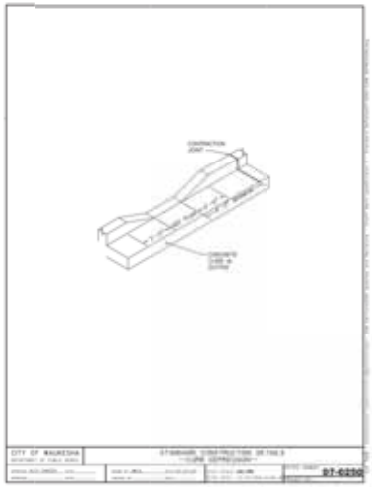

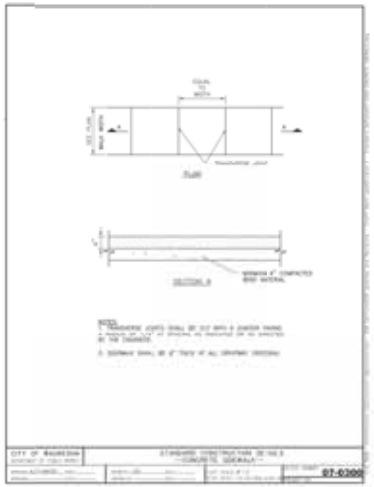

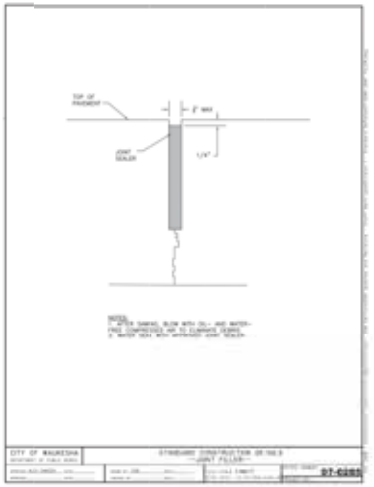

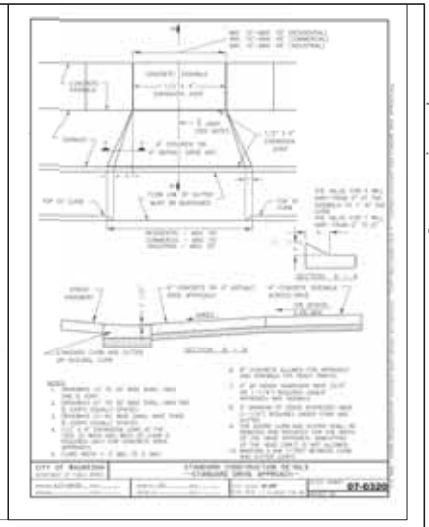

THESE PLANS AND DESIGNS ARE COPYRIGHT PROTECTED AND MAY NOT BE USED IN WHOLE OR IN PART WITHOUT THE WRITTEN CONSENT OF PINNACLE ENGINEERING GROUP, LLC

DRAFTED: JG DESIGNED: DD REVIEWED: MAC

PLAN I DESIGN I DELIVER
www.pinnacle-engr.com

PINNACLE ENGINEERING GROUP
ENGINEERING I NATURAL RESOURCES I SURVEYING

WISCONSIN OFFICE:
20725 WATERTOWN ROAD
BROOKFIELD, WI 53186
(262) 754-8888
CHICAGO I MILWAUKEE I NATIONWIDE

FRAME PARK COMMONS

WAUKESHA, WI

CONSTRUCTION DETAILS

REVISIONS

PEG JOB No. 1545.00-WI
PEG PM MAC
START DATE 08/20/2018
SCALE

SHEET
C-11
C-11

COPYRIGHT © 2018

CONSTRUCTION DETAILS

FOR REVIEW ONLY

www.pinnacle-engr.com

Z:\PROJECTS\2018\1545.00-WI\CAD\SHEETS\1545.00-WI CONSTRUCTION DETAILS.DWG