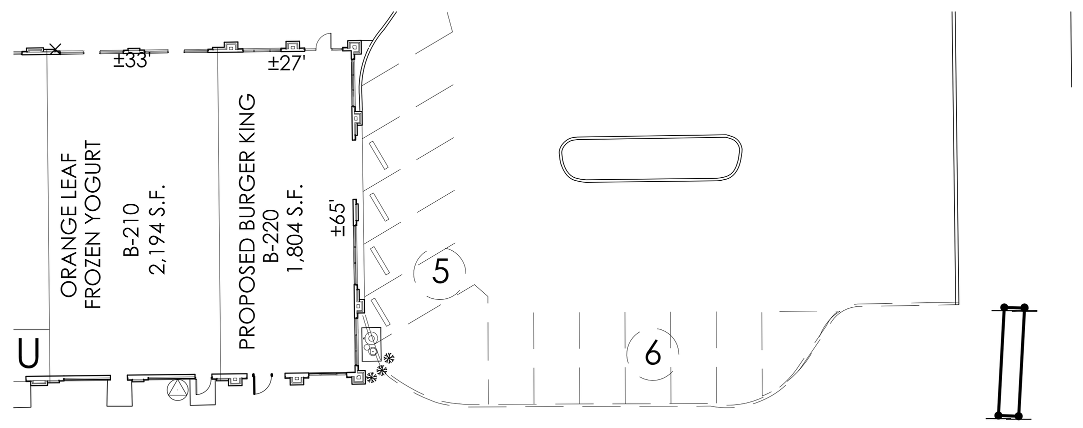

2 EXISTING SITE PLAN
1" = 30'-0"

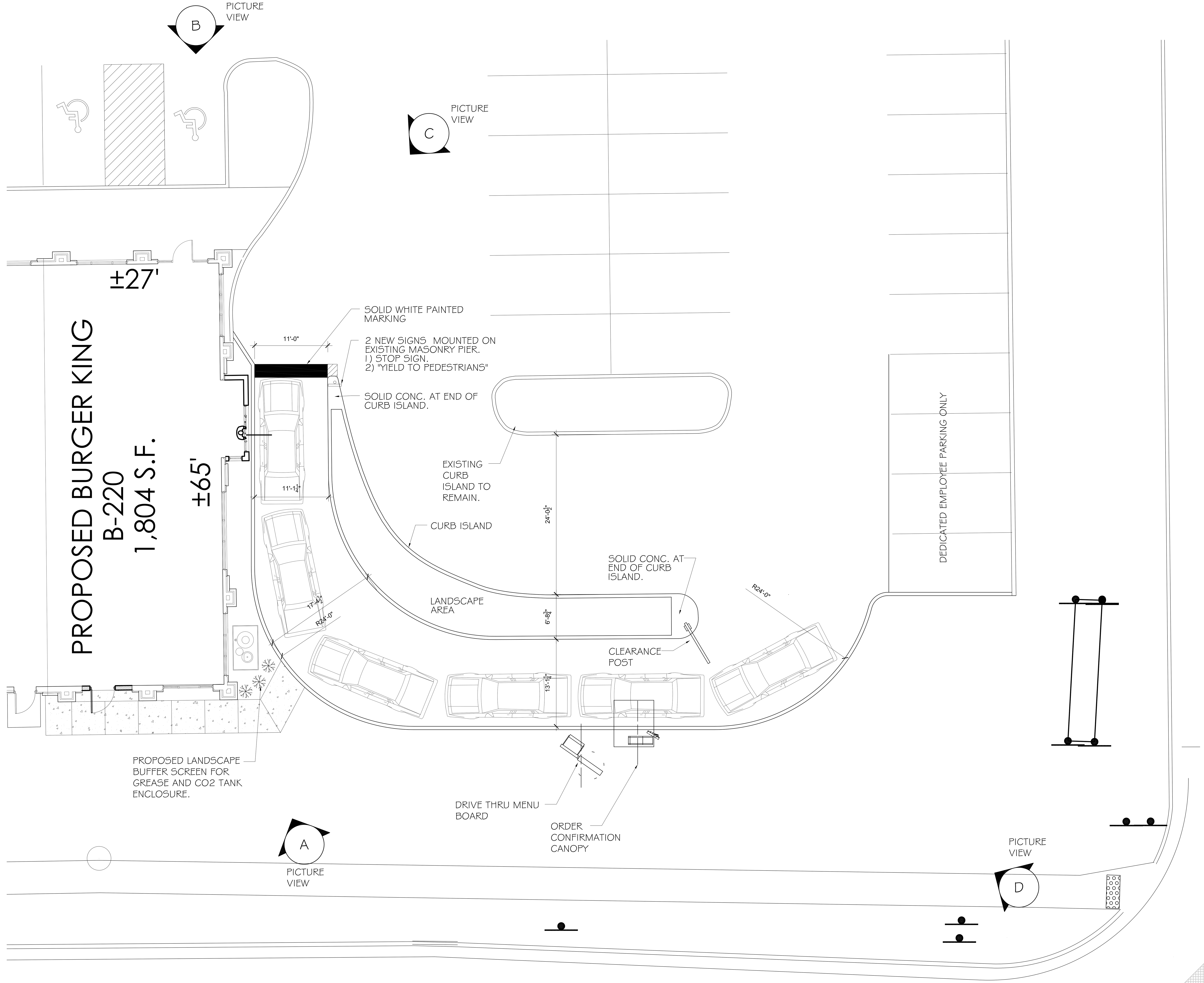

1 PROPOSED SITE PLAN
1/8" = 1'-0"

NOT FOR CONSTRUCTION
DRAWINGS ARE ISSUED FOR REVIEW AND COORDINATION ONLY.

© COPYRIGHT 2016. THIS DRAWING IS THE PROPERTY OF PROSI DESIGN INC. ANY REPRODUCTION WITHOUT WRITTEN PERMISSION FROM PROSI DESIGN INC. IS STRICTLY PROHIBITED.

NO.	DATE	ISSUES & REVISIONS
	07-12-2016	ISSUED FOR REVIEW

PROSI DESIGN, INC.
ARCHITECTURE • PLANNING • INTERIOR DESIGN
7400 WAUKEGAN ROAD, SUITE A-213
NILES, IL 60714
PHONE: 847-779-3180
FAX: 847-510-0500
E-MAIL: info@prosidesign.com

BURGER KING
NEW RESTAURANT

BUILDING D-1
SHOPPES AT FOX RIVER
TENANT SPACE D-150
WAUKESHA, WI

DRAWN BY	STAFF
CHECKED BY	GTP

SP-1.0