HEARTLAND DENTAL

SUNSET DR. & TENNY AVE.
WAUKESHA, WI 53189

VICINITY MAP

NORTH

LEGAL DESCRIPTION

AS DESCRIBED IN CHICAGO TITLE INSURANCE COMPANY – FIDELITY NATIONAL TITLE INSURANCE COMPANY ORDER NUMBER CO-7016 NCS-MI-FILE NO. 17-111319 WITH AN EFFECTIVE DATE OF NOVEMBER 21, 2017 – REVISION A.

LOT 3 OF CERTIFIED SURVEY MAP NO. 11606, RECORDED AUGUST 23, 2017 IN BOOK 116 OF CERTIFIED SURVEY MAPS ON PAGES 94-97, AS DOCUMENT NO. 4295767, BEING A DIVISION OF LOTS 2 AND 3 IN CERTIFIED SURVEY MAP NO. 11263, BEING A DIVISION OF PART OF THE NORTHEAST 1/4 AND SOUTHEAST 1/4 OF THE NORTHWEST 1/4 OF SECTION 14, TOWNSHIP 6 NORTH, RANGE 19 EAST, IN THE CITY OF WAUKESHA, COUNTY OF WAUKESHA, STATE OF WISCONSIN.

TAX KEY NO: WAKC 1350.256 (LOT 3) AND PART OF WAKC 1350.255 (LOT 2)
ADDRESS: SITUATED ON E. SUNSET DRIVE

REVISION ISSUE LOG

REV #	ISSUE DATE	DESCRIPTION	AFFECTED SHEETS	REMARKS	BY
1	5-18-18	CLIENT REVISIONS	C0, C1, C2, C3, C3.1	ADDED SECOND BUILDING	CDB
2	6-11-18	CITY COMMENTS	C1, SL1, L1, L2		CDB

SHEET INDEX

SHT. NO.	DESCRIPTION
CS	COVER SHEET
	CIVIL DRAWINGS
C0	GENERAL NOTES
C1	SITE DIMENSION PLAN
C2	SITE UTILITY PLAN
C3	GRADING AND DRAINAGE PLAN
C3.1	STORMWATER POLLUTION PREVENTION CONTROL
C4	DETAILS
C4.1	DETAILS
SL1	SITE LIGHTING PLAN
L1	LANDSCAPE PLAN
L2	LANDSCAPE DETAILS
L3	IRRIGATION PLANS
L4	IRRIGATION DETAILS
–	SURVEY

LOCATION MAP

NORTH

OWNER & CONSULTANTS

OWNER

MEIJER STORES LP
2929 WALKER AV NW
GRAND RAPIDS, MI 49544

ARCHITECT

INTERPLAN LLC
604 COURTLAND ST, SUITE 100
ORLANDO, FL 32804
CONTACT: JAY SCHONEMAN

CIVIL ENGINEER

INTERPLAN LLC
604 COURTLAND ST, SUITE 100
ORLANDO, FL 32804
CONTACT: CHRIS BLURTON

INTERPLAN LLC

ARCHITECTURE
ENGINEERING
INTERIOR DESIGN
PROJECT MANAGEMENT

604 COURTLAND STREET
SUITE 100
ORLANDO, FLORIDA 32804
PH 407.645.5008
FX 407.629.9124

SEAL:

WISCONSIN STUART ANDERSON E-44904 ORLANDO, FL PROFESSIONAL ENGINEER

Digitally signed by Stuart A Anderson
Date: 2018.06.22 10:08:36-04'00'

STUART ANDERSON, P.E.
WI. REG. #44904-6

NO DATE REMARKS
REVISIONS

HEARTLAND DENTAL

SUNSET DR. & TENNY AVE.
WAUKESHA, WI 53189

PROJECT NO: 2017.0582
DATE: 3-1-18

CS
COVER SHEET

CHECKED: CDB DRAWN: H.M

COPYRIGHT © 2016 INTERPLAN LLC RESERVES COPYRIGHT & OTHER RIGHTS RESTRICTING THESE DOCUMENTS TO THE ORIGINAL SITE OR PURPOSE FOR WHICH THEY WERE PREPARED. REPRODUCTIONS, CHANGES OR ASSIGNMENTS ARE PROHIBITED.

EROSION CONTROL NOTES

ALL EROSION CONTROL MEASURES SHALL REMAIN IN PLACE UNTIL COMPLETION OF CONSTRUCTION.

1. ALL EROSION AND SEDIMENT CONTROL WORK SHALL CONFORM WITH LOCAL CITY/COUNTY AND WATER MANAGEMENT DISTRICT SPECIFICATIONS, SUBJECT TO AUTHORIZED AND APPROVED VARIANCES, WAIVERS AND/OR CONDITIONAL CHANGES.

2. EROSION AND SEDIMENT CONTROL MEASURES SHALL BE PLACED PRIOR TO OR AS THE FIRST STEP IN, CONSTRUCTION. SEDIMENT CONTROL PRACTICES WILL BE APPLIED AS A PERIMETER DEFENSE AGAINST ANY TRANSPORTATION OF SILT OFF THE SITE.

3. ALL AREAS AFFECTED BY THIS WORK SHALL BE RESTORED TO A CONDITION EQUAL TO OR BETTER THAN EXISTING CONDITION, UNLESS SPECIFICALLY EXEMPTED BY THE PLANS. THE COST FOR SUCH RESTORATION SHALL BE INCIDENTAL TO OTHER CONSTRUCTION AND NO ADDITIONAL COMPENSATION SHALL BE ALLOWED.

4. THE CONTRACTOR SHALL IMMEDIATELY NOTIFY THE ENGINEER OF ANY DISCREPANCIES BETWEEN THESE PLANS AND FIELD CONDITIONS PRIOR TO CONSTRUCTION.

5. PRIOR TO CONSTRUCTION THE CONTRACTOR SHALL PROVIDE TREE PROTECTION BARRIERS TO MEET THE REQUIREMENTS OF LOCAL SPECIFICATIONS.

6. THE CONTRACTOR SHALL SELECTIVELY CLEAR ONLY THE AREAS REQUIRED FOR CONSTRUCTION AND STABILIZE ANY POTENTIAL EROSION AREAS IMMEDIATELY FOLLOWING COMPLETION OF CONSTRUCTION.

7. CONTRACTOR SHALL KEEP ANY AND ALL SAND, SILT OR OTHER DEBRIS FROM MOVING OFF-SITE. USE AND MAINTAIN SILT FENCE JUST INSIDE OF PROPERTY LINE.

8. CONTRACTOR SHALL BLOCK INTRUSION OF SAND, SILT OR OTHER DEBRIS INTO ANY DRAINAGE OR SANITARY SEWER STRUCTURE OR PIPING ON OR ADJACENT TO SITE.

9. ALL CLEARED AREAS FOR IMPROVEMENT AND/OR CONSTRUCTION SHALL BE WATERED TO PREVENT WIND EROSION.

10. FOR ADDITIONAL INFORMATION AND DETAILS, SEE WI.D.O.T. INDEX NO. '8e'.

11. UNLESS SPECIFIED, SILT FENCES MAY BE USED IN LIEU OF HAY BARRIERS.

12. ADDITIONAL POSTS AND RAILS MAY BE NECESSARY TO SECURE AND SUPPORT BARRIERS.

13. ADDITIONAL BARRIER LENGTHS MAY BE REQUIRED BY THE COUNTY ENGINEER OR BY REGULATORY AGENCIES.

14. FILTER FABRIC MUST BE INSTALLED UNDER ALL INLET GRATES, AT ALL TIMES WHEN INLETS ARE NOT PROTECTED BY SILT FENCE OR HAY BALES, UNTIL THE LIMEROCK BASE IS FINISHED AND PRIMED.

15. THE CONTRACTOR IS REQUIRED TO HAVE THE EROSION CONTROL PLAN POSTED IN A VISIBLE LOCATION ON THE CONSTRUCTION SITE AT ALL TIMES.

16. NON STORMWATER DISCHARGES SUCH AS FIRE HYDRANT FLUSHING, ETC SHALL BE DISCHARGED TO EXISTING UNDERGROUND STORMWATER FACILITY.

17. ANY POTENTIALLY HAZARDOUS CHEMICALS BROUGHT ONTO THE JOB SITE WILL BE LIMITED AND KEPT IN ORIGINAL CONTAINER WITH MSDS LABEL.

18. NO SILT SHALL BE TRACKED ONTO PUBLIC ROADWAYS. ANY SILT DEPOSITED ON PUBLIC ROADWAYS SHALL BE REMOVED BY THE END OF THE WORK DAY.

DEMOLITION NOTES

1. PRIOR TO COMMENCEMENT OF DEMOLITION THE CONTRACTOR WILL COORDINATE HIS ACTIVITIES WITH ALL THE UTILITY COMPANIES SERVING THIS AREA. CONTRACTOR IS TO COORDINATE FULLY WITH UTILITY COMPANIES ON EXACT LOCATION OF UNDERGROUND UTILITIES PRIOR TO EXCAVATION.

2. THE CONTRACTOR IS TO COMPLETELY REMOVE AND DISPOSE OF ALL STRUCTURES AND BUILDINGS THAT IS SO INDICATED INCLUDING FOUNDATIONS, TIMBER AND BRUSH, EXCEPT AS OTHERWISE INDICATED; STUMPS AND ROOTS; EXISTING PAVEMENT; OTHER STRUCTURES AS SHOWN OR REASONABLY IMPLIED IN THE DRAWINGS.

3. EXCEPT IN AREAS WHERE EXISTING TREES SHALL BE PRESERVED, A MINIMUM DEPTH OF REMOVAL SHALL BE (2) FOOT BELOW SUBGRADE IN ROADWAY AREAS AND TO ORIGINAL SOILS ELSEWHERE. WHERE EXISTING BUILDINGS ARE TO BE DEMOLISHED, ALL TRACES OF FOUNDATIONS AND UNDERGROUND UTILITIES ARE TO BE REMOVED (UNLESS OTHERWISE NOTED ON PLANS). THE CONTRACTOR IS RESPONSIBLE FOR PROPER DISPOSAL OF ALL WASTE MATERIAL.

4. WHERE PAVING OR STRUCTURES ARE TO BE REMOVED WHICH ABUT OR ARE A PART OF CONNECTED FACILITIES (THAT ARE OFF-SITE), RESTORATION OF ANY DAMAGE THAT MIGHT RESULT FROM DEMOLITION IS TO BE RESTORED TO A CONDITION EQUAL TO OR BETTER THAN EXISTING UNLESS SPECIFICALLY EXEMPTED BY THE PLANS. THE COST FOR SUCH RESTORATION SHALL BE INCIDENTAL TO OTHER CONSTRUCTION AND NO EXTRA COMPENSATION WILL BE ALLOWED.

5. THE LOCATION OF ALL EXISTING UTILITIES, STORM DRAINAGE AND TREES SHOWN ON THE PLANS HAVE BEEN DETERMINED FROM AVAILABLE INFORMATION AND IS GIVEN FOR THE CONVENIENCE OF THE CONTRACTOR. THE OWNER OR ENGINEER ASSUMES NO RESPONSIBILITY FOR ACCURACY. PRIOR TO THE START OF DEMOLITION THE CONTRACTOR SHALL VISIT THE SITE AND DETERMINE THE EXISTANCE & LOCATION OF ALL STRUCTURES, UTILITIES & TREES SHOWN OR NOT ON THE PLANS, WHICH WOULD NEED TO BE REMOVED OR PRESERVED.

6. THE CONTRACTOR IS TO COORDINATE THE RELOCATION OR REMOVAL OF ALL OVERHEAD/UNDERGROUND UTILITIES, UTILITY POLES, LIGHTS AND LINES IN THE RIGHT-OF-WAY AND ON THE PROPERTY WITH THE APPROPRIATE SERVICE PROVIDER.

7. THE CONTRACTOR SHALL REFERENCE AND RESTORE PROPERTY CORNERS AND LAND MARKERS DISTURBED DURING CONSTRUCTION. (UNDER THE DIRECTION OF A WISCONSIN REGISTERED LAND SURVEYOR).

DISINFECTING & TESTING NOTES

WATER MAINS THAT ARE INCLUDED IN THIS PROJECT THAT WILL BE CONSTRUCTED OF POLYVINYL CHLORIDE PIPE WILL BE PRESSURE AND LEAKAGE TESTED IN ACCORDANCE WITH AWWA STANDARD C605. ALL OTHER WATER MAINS INCLUDED IN THIS PROJECT WILL BE PRESSURE AND LEAKAGE TESTED IN ACCORDANCE WITH AWWA STANDARD C600.

LEAKAGE TESTS ARE REQUIRED AS FOLLOWS: 1) THE LEAKAGE EXFILTRATION OR INFILTRATION DOES NOT EXCEED 200 GALLONS PER INCH OF PIPE DIAMETER PER MILE PER DAY FOR ANY SECTION OF THE PIPE; 2) EXFILTRATION OR INFILTRATION TESTS BE PERFORMED WITH A MINIMUM POSITIVE HEAD OF 2 FEET; 3) AIR TESTS, AS A MINIMUM, CONFORM TO THE TEST PROCEDURE DESCRIBED IN ASTM C 828 FOR CLAY PIPE, ASTM C 924 FOR CONCRETE PIPE, ASTM F-1417 FOR PLASTIC PIPE, AND FOR OTHER MATERIALS APPROPRIATE TEST PROCEDURES.

DISINFECTION OF THE WATER DISTRIBUTION SYSTEM SHALL BE PERFORMED IN ACCORDANCE WITH AWWA C651 DISINFECTING WATER MAINS. **SATISFACTORY BACTERIOLOGICAL TEST RESULTS SHALL BE SUBMITTED TO ENGINEER PRIOR TO FINAL CERTIFICATION.**

THE CONTRACTOR SHALL MAKE PROVISIONS TO PROTECT THE ACTIVE EXISTING MAIN FROM BACKFLOW CONTAMINATION DURING FILLING, FLUSHING, AND TESTING OF THE NEW MAIN, AS SPECIFIED IN AWWA C651-92.

CONTRACTOR SHALL UTILIZE A JUMPER CONNECTION DURING WATER MAIN TESTING. ALTERNATE TYPES OF BACKFLOW PREVENTION MAY BE UTILIZED AS APPROVED BY INSPECTION STAFF AND ENGINEER.

UTILITY SEPARATION NOTES

(1) HORIZONTAL SEPARATION BETWEEN UNDERGROUND WATER MAINS AND SANITARY OR STORM SEWERS, WASTEWATER OR STORM WATER FORCE MAINS, RECLAIMED WATER PIPELINES, AND ON-SITE SEWAGE TREATMENT AND DISPOSAL SYSTEMS.

(A) NEW OR RELOCATED, UNDERGROUND WATER MAINS SHALL BE LAID TO PROVIDE A HORIZONTAL DISTANCE OF AT LEAST THREE FEET BETWEEN THE OUTSIDE OF THE WATER MAIN AND THE OUTSIDE OF ANY EXISTING OR PROPOSED STORM SEWER, STORM WATER FORCE MAIN, OR PIPELINE CONVEYING RECLAIMED WATER REGULATED UNDER PART III OF CHAPTER 62-610, F.A.C.

(B) NEW OR RELOCATED, UNDERGROUND WATER MAINS SHALL BE LAID TO PROVIDE A HORIZONTAL DISTANCE OF AT LEAST THREE FEET, AND PREFERABLY TEN FEET, BETWEEN THE OUTSIDE OF THE WATER MAIN AND THE OUTSIDE OF ANY EXISTING OR PROPOSED VACUUM-TYPE SANITARY SEWER.

(C) NEW OR RELOCATED, UNDERGROUND WATER MAINS SHALL BE LAID TO PROVIDE A HORIZONTAL DISTANCE OF AT LEAST SIX FEET, AND PREFERABLY TEN FEET, BETWEEN THE OUTSIDE OF THE WATER MAIN AND THE OUTSIDE OF ANY EXISTING OR PROPOSED GRAVITY- OR PRESSURE-TYPE SANITARY SEWER, WASTEWATER FORCE MAIN, OR PIPELINE CONVEYING RECLAIMED WATER NOT REGULATED UNDER PART III OF CHAPTER 62-610, F.A.C. THE MINIMUM HORIZONTAL SEPARATION DISTANCE BETWEEN WATER MAINS AND GRAVITY-TYPE SANITARY SEWERS SHALL BE REDUCED TO THREE FEET WHERE THE BOTTOM OF THE WATER MAIN IS LAID AT LEAST SIX INCHES ABOVE THE TOP OF THE SEWER.

(D) NEW OR RELOCATED, UNDERGROUND WATER MAINS SHALL BE LAID TO PROVIDE A HORIZONTAL DISTANCE OF AT LEAST TEN FEET BETWEEN THE OUTSIDE OF THE WATER MAIN AND ALL PARTS OF ANY EXISTING OR PROPOSED "ON-SITE SEWAGE TREATMENT AND DISPOSAL SYSTEM" AS DEFINED IN SECTION 381.0065(2), F.S., AND RULE 64E-6.002, F.A.C.

(2) VERTICAL SEPARATION BETWEEN UNDERGROUND WATER MAINS AND SANITARY OR STORM SEWERS, WASTEWATER OR STORM WATER FORCE MAINS, AND RECLAIMED WATER PIPELINES.

(A) NEW OR RELOCATED, UNDERGROUND WATER MAINS CROSSING ANY EXISTING OR PROPOSED GRAVITY- OR VACUUM-TYPE SANITARY SEWER OR STORM SEWER SHALL BE LAID SO THE OUTSIDE OF THE WATER MAIN IS AT LEAST SIX INCHES, AND PREFERABLY 12 INCHES, ABOVE OR AT LEAST 12 INCHES BELOW THE OUTSIDE OF THE OTHER PIPELINE. HOWEVER, IT IS PREFERABLE TO LAY THE WATER MAIN ABOVE THE OTHER PIPELINE.

(B) NEW OR RELOCATED, UNDERGROUND WATER MAINS CROSSING ANY EXISTING OR PROPOSED PRESSURE-TYPE SANITARY SEWER, WASTEWATER OR STORM WATER FORCE MAIN, OR PIPELINE CONVEYING RECLAIMED WATER SHALL BE LAID SO THE OUTSIDE OF THE WATER MAIN IS AT LEAST 12 INCHES ABOVE OR BELOW THE OUTSIDE OF THE OTHER PIPELINE. HOWEVER, IT IS PREFERABLE TO LAY THE WATER MAIN ABOVE THE OTHER PIPELINE.

(C) AT THE UTILITY CROSSINGS DESCRIBED IN PARAGRAPHS (A) AND (B) ABOVE, ONE FULL LENGTH OF WATER MAIN PIPE SHALL BE CENTERED ABOVE OR BELOW THE OTHER PIPELINE SO THE WATER MAIN JOINTS WILL BE AS FAR AS POSSIBLE FROM THE OTHER PIPELINE. ALTERNATIVELY, AT SUCH CROSSINGS, THE PIPES SHALL BE ARRANGED SO THAT ALL WATER MAIN JOINTS ARE AT LEAST THREE FEET FROM ALL JOINTS IN VACUUM-TYPE SANITARY SEWERS, STORM SEWERS, STORM WATER FORCE MAINS, OR PIPELINES CONVEYING RECLAIMED WATER REGULATED UNDER PART III OF CHAPTER 62-610, F.A.C., AND AT LEAST SIX FEET FROM ALL JOINTS IN GRAVITY- OR PRESSURE-TYPE SANITARY SEWERS, WASTEWATER FORCE MAINS, OR PIPELINES CONVEYING RECLAIMED WATER NOT REGULATED UNDER PART III OF CHAPTER 62-610, F.A.C.

(3) SEPARATION BETWEEN WATER MAINS AND SANITARY OR STORM SEWER MANHOLES.

(A) NO WATER MAIN SHALL PASS THROUGH, OR COME INTO CONTACT WITH, ANY PART OF A SANITARY SEWER MANHOLE.

(B) EFFECTIVE AUGUST 28, 2003, WATER MAINS SHALL NOT BE CONSTRUCTED OR ALTERED TO PASS THROUGH, OR COME INTO CONTACT WITH, ANY PART OF A STORM SEWER MANHOLE OR INLET STRUCTURE.

(4) SEPARATION BETWEEN FIRE HYDRANT DRAINS AND SANITARY OR STORM SEWERS, WASTEWATER OR STORM WATER FORCE MAINS, RECLAIMED WATER PIPELINES, AND ON-SITE SEWAGE TREATMENT AND DISPOSAL SYSTEMS.
NEW OR RELOCATED FIRE HYDRANTS WITH UNDERGROUND DRAINS SHALL BE LOCATED SO THAT THE DRAINS ARE AT LEAST THREE FEET FROM ANY EXISTING OR PROPOSED STORM SEWER, STORM WATER FORCE MAIN, OR PIPELINE CONVEYING RECLAIMED WATER REGULATED UNDER PART III OF CHAPTER 62-610, F.A.C.; AT LEAST THREE FEET, AND PREFERABLY TEN FEET, FROM ANY EXISTING OR PROPOSED VACUUM-TYPE SANITARY SEWER; AT LEAST SIX FEET, AND PREFERABLY TEN FEET, FROM ANY EXISTING OR PROPOSED GRAVITY- OR PRESSURE-TYPE SANITARY SEWER, WASTEWATER FORCE MAIN, OR PIPELINE CONVEYING RECLAIMED WATER NOT REGULATED UNDER PART III OF CHAPTER 62-610, F.A.C.; AND AT LEAST TEN FEET FROM ANY EXISTING OR PROPOSED "ON-SITE SEWAGE TREATMENT AND DISPOSAL SYSTEM" AS DEFINED IN SECTION 381.0065(2), F.S., AND RULE 64E-6.002, F.A.C.

UTILITY CONTACTS

WATER/ — WAUKESHA WATER UTILITY DEPARTMENT
ADDRESS:115 DELAFIELD ST., PO BOX 1648,
WAUKESHA, WI 53187
CONTACT: NICK ELLIFSON
PHONE #: 262-521-5272
EMAIL: NELLIFSON@WAUKESHA-WATER.COM

SEWER — CITY OF WAUKESHA PUBLIC WORKS DEPARTMENT
ADDRESS:130 DELAFIELD ST., WAUKESHA, WI 53188
CONTACT: CHRIS LANGEMAK
PHONE #:262-524-3600
EMAIL: CLANGEMAK@WAUKESHA-WI.GOV

ELECTRIC / GAS — WE ENERGIES
231 W. MICHIGAN ST.,
MILWAUKEE, WI 53203
CONTACT: KELLY FEHRMAN
PHONE #: 262-574-3062
EMAIL: KELLY.FEHRMAN@WE-ENERGIES.COM

UTILITY NOTES

PRIOR TO COMMENCING ANY CONSTRUCTION, THE CONTRACTOR SHALL FIELD VERIFY ALL EXISTING UTILITIES, INCLUDING WITHOUT LIMITATION POTABLE WATER, RECLAIMED WATER, SANITARY SEWER, AND SERVICE UTILITIES, AT POINTS OF CONNECTION, POINTS OF CROSSING, AND/OR POTENTIAL CONFLICT. NOTIFY ENGINEER OF ANY DISCREPANCIES BETWEEN THE PLANS AND FIELD CONDITIONS.

A. GENERAL

1. THE LOCATIONS OF EXISTING UTILITIES, SUCH AS WATER MAINS, SEWERS, GAS LINES, ETC., SHOWN ON THE PLANS ARE BASED ON THE BEST AVAILABLE INFORMATION AND ARE SHOWN FOR THE CONVENIENCE OF THE CONTRACTOR. THE ENGINEER AND OWNER ASSUME NO LIABILITY FOR ACCURACY AND COMPLETENESS. IT IS THE CONTRACTOR'S RESPONSIBILITY TO CONTACT ALL UTILITY COMPANIES 48 HOURS PRIOR TO COMMENCEMENT OF CONSTRUCTION AND TO HAVE THEIR FACILITIES LOCATED IN THE FIELD PRIOR TO ANY WORK.

2. DUE TO GRAPHIC LIMITATIONS OF THE DRAWING SCALE, ALL STORM SEWER, DRAINAGE, WATER AND SANITARY SEWER MAINS, SERVICES, LATERALS, CONNECTIONS, AND APPURTENANCES DEPICTED HEREIN - UNLESS OTHERWISE LOCATED BY DIMENSIONS - REFLECT SCHEMATIC LOCATIONS ONLY. THE CONTRACTOR SHALL BE RESPONSIBLE FOR THE FINAL LOCATIONS IN ACTUAL CONSTRUCTION AND INSTALLATION OF THE PROPOSED IMPROVEMENTS, INCLUDING ANY REQUISITE COORDINATION WITH THE RESPECTIVE GOVERNING AGENCY/UTILITY PROVIDER.

3. ALL WATER AND SEWER CONSTRUCTION SHALL CONFORM TO THE STANDARDS AND SPECIFICATIONS OF THE WAUKESHA, AND WILL BE SUBJECT TO THEIR INSPECTION AND ACCEPTANCE.

4. CONTRACTOR SHALL INSPECT PIPING AND MATERIALS BEFORE INSTALLATION TO DETECT APPARENT DEFECTS. MARK DEFECTIVE MATERIALS WITH WHITE PAINT AND PROMPTLY REMOVE FROM SITE.

5. LAY SEWER PIPING BEGINNING AT LOW POINT OF SYSTEM (CONNECTION TO OFF SITE SYSTEM OR PUMP STATION), TRUE TO GRADES AND ALIGNMENT INDICATED WITH UNBROKEN CONTINUITY OF INVERTS. PLACE BELL ENDS OR GROOVE ENDS OF PIPING FACING UPSTREAM.

6. CLEAR INTERIOR OF PIPE OF DIRT AND OTHER SUPERFLUOUS MATERIAL AS WORK PROGRESSES. MAINTAIN SWAB OR DRAG IN LINE AND PULL PAST EACH JOINT AS IT IS COMPLETED. PLACE PLUGS IN ENDS OF UNCOMPLETED CONDUIT WHENEVER WORK STOPS.

7. MAINTAIN 60" COVER OVER MAINS, AND 48" OVER SERVICES/LATERALS.

8. WHEN PROPOSED CONSTRUCTION OCCURS AT EXISTING MANHOLES, INLETS, VAULTS, AND OTHER STRUCTURES, THE CONTRACTOR SHALL MODIFY THE STRUCTURES, FRAMES, AND GRATES TO MEET THE PROPOSED GRADES UNLESS OTHERWISE DIRECTED.

9. INSTALL CONTINUOUS LOCATOR TAPE/WIRE, LOCATED DIRECTLY OVER POTABLE WATER MAINS AND SANITARY SEWER MAINS AT 6" TO 8" ABOVE PIPE.

10. WHERE APPLICABLE, UTILITY TRENCHES CROSSING PAVEMENT AREAS SHALL BE BACK FILLED WITH COMPACTED GRANULAR MATERIAL IN ACCORDANCE WITH A.A.S.H.T.O.-T-99.

11. CONTRACTOR SHALL PROVIDE SLEEVES FOR IRRIGATION LINES UNDER PAVEMENT. COORDINATE WITH GENERAL CONTRACTOR.

12. ALL TRENCHES EXCAVATED FOR THE PURPOSES OF UTILITY/STORM INSTALLATION SHALL BE KEPT DRY FOR THE DURATION OF UTILITY/STORM CONSTRUCTION. DEWATERING OF UTILITY/STORM TRENCHES MAY BE REQUIRED TO PREVENT FLOTATION OF UTILITY/STORM PIPES DURING INSTALLATION.

13. THE CONTRACTOR SHALL NOTIFY THE ENGINEER WHEN CONSTRUCTION IS COMPLETE FOR WATER, WASTEWATER AND STORMWATER SYSTEMS SO TIMELY CERTIFICATIONS MAY BE INITIATED. SATISFACTORY BACTERIOLOGICAL TEST RESULTS, PRESSURE TEST RESULTS, AND AN AS BUILT SURVEY SHALL BE SUBMITTED TO ENGINEER PRIOR TO FINAL CERTIFICATION.

14. SUITABLE COUPLINGS COMPLYING WITH ASTM SPECIFICATIONS ARE REQUIRED FOR JOINING DISSIMILAR MATERIALS.

15. DEFLECTION TESTS ARE REQUIRED FOR ALL FLEXIBLE PIPE. TESTING REQUIREMENTS: 1) NO PIPE SHALL EXCEED A DEFLECTION OF 5%; 2) USING A RIGID BALL OR MANDREL FOR THE DEFLECTION TEST WITH A DIAMETER NOT LESS THEN 95% OF THE BASE INSIDE DIAMETER OR AVERAGE INSIDE DIAMETER OF THE PIPE; 3) PERFORMING THE TEST WITHOUT MECHANICAL PULLING DEVICES.

B. MATERIALS (WATER)

1. SERVICE PIPE SHALL BE POLYETHYLENE (PE), DR9.

2. WATER MAINS SHALL BE PVC ASTM C900, DR 18 WITH INTEGRAL BELLS AND ELASTOMERIC JOINTS PER ASTM C3139 AND GASKETS PER ASTM F477.

3. DUCTILE IRON PIPE (D.I.P.), IF REQUIRED, SHALL CONFORM TO ANSI/AWWA A21.51/C151, CLASS 50 (MIN.) PIPE FOR ALL SIZES.

4. CORPORATION STOPS SHALL BE 1 1/2" BRASS, EQUIPPED WITH CONNECTIONS COMPATIBLE WITH SERVICE PIPE AND THREADED IN ACCORDANCE WITH SPECIFICATIONS IN AWWA C800. CURB STOPS SHALL BE SIZED TO MATCH THE METER SIZE AND CONFORM WITH AWWA C800 AND AWWA C901.

5. FITTINGS SHALL BE BRASS, CAST AND MACHINED IN ACCORDANCE WITH AWWA C800 AND AWWA C901, WITH COMPATIBLE PIPE CONNECTIONS.

6. SERVICE SADDLES SHALL BE USED FOR ALL SERVICE LINE TAPS. SERVICE SADDLES SHALL BE DOUBLE STRAP, ANCHORED BY A MINIMUM FOUR (4) BOLT PATTERN ON A DUCTILE IRON SADDLE BODY. FOR PVC PIPE, DOUBLE STRAPS SHALL BE CORROSION RESISTANT ALLOY STEEL, SIZED EXACTLY TO THE PIPE OUTSIDE DIAMETER. SEALING GASKETS SHALL BE BUNA-N RUBBER.

7. ALL PIPE AND PIPE FITTINGS INSTALLED UNDER THIS PROJECT WILL BE COLOR CODED USING BLUE AS A PREDOMINANT COLOR.

C. MATERIALS (SEWER)

1. ALL GRAVITY SEWER PIPE AND FITTINGS SHALL BE NON-PRESSURE POLYVINYL CHLORIDE PIPE (PVC) CONFORMING TO ASTM D 3034, SDR 26, WITH PUSH-ON RUBBER GASKET JOINTS.

2. ALL FITTINGS AND ACCESSORIES SHALL BE MANUFACTURED OR SUPPLIED BY THE PIPE MANUFACTURER OR PRIOR-APPROVED EQUAL.

3. BEDDING AND INITIAL BACK FILL OVER SEWER MAINS AND SERVICES SHALL BE SAND WITH NO ROCK LARGER THAN 1" IN DIAMETER.

D. MATERIALS (STORM)

1. REINFORCED CONCRETE PIPE (RCP): O-RING PIPE SHALL CONFORM TO ASTM C 76 (CLASS III, UNLESS OTHERWISE SPECIFIED) AND AASHTO M 170 STANDARD SPECIFICATIONS, AND ASTM C 443 STANDARD SPECIFICATION FOR JOINTS FOR RCP USING RUBBER GASKETS.

2. ELLIPTICAL RCP SHALL CONFORM TO ASTM C 507 (CLASS III) AND AASHTO M 207 STANDARD SPECIFICATIONS.

3. HDPE PIPE AND FITTINGS SHALL MEET THE REQUIREMENTS OF AASHTO M-25 (3"-10"), M-294 (12" AND LARGER), TYPE S (CORRUGATED OUTSIDE - SMOOTH INSIDE, 4"-60"), AND MP7 (60" TYPE S).

A. BELL/SPIGOT GASKET FOR HDPE PIPE SHALL BE SOIL/SILT TIGHT PER AASHTO SECTION 26 WITH RUBBER GASKET MEETING ASTM F-477.

4. PVC STORM SEWER PIPE (12" OR LESS) AND FITTINGS SHALL BE NON-PRESSURE POLYVINYL CHLORIDE PIPE (PVC) CONFORMING TO ASTM D 3034, SDR 26, WITH PUSH-ON RUBBER GASKET JOINTS.

GENERAL NOTES

A. GENERAL

1. ALL INFRASTRUCTURE AND IMPROVEMENTS SHALL CONFORM TO THE STANDARDS AND SPECIFICATIONS OF THE LOCAL JURISDICTION AND WILL BE SUBJECT TO THEIR INSPECTION AND ACCEPTANCE.

2. SITE LOCATION: SUNSET DR. & TENNY AVE., WAUKESHA, WI 53189

3. THIS SITE LIES IN FLOOD ZONE X, F.I.R.M. PANEL 55133C0326G, DATED 11/05/2014 .

4. BOUNDARY, TOPOGRAPHIC, AND TREE SURVEY BY PINNACLE ENGINEERING GROUP , ADDRESS, 15850 W. BLUEMOUND ROAD BROOKFIELD, WI 53005.

5. BENCHMARK - REFER TO TOPOGRAPHIC SURVEY BY PINNACLE ENGINEERING GROUP .

6. LEGAL DESCRIPTION SHOWN HEREIN IS FURNISHED BY SURVEYOR, AND IS INCLUDED FOR PERMITTING AND APPROVAL PURPOSES, AND AS A COURTESY FOR THE CONTRACTOR. INTERPLAN LLC. ASSUMES NO LIABILITY FOR ITS ACCURACY OR COMPLETENESS.

7. SITE GEOTECHNICAL INVESTIGATION PERFORMED BY ECS MIDWEST,LLC ENGINEERING. INTERPLAN LLC. ASSUMES NO RESPONSIBILITY FOR THE CORRECTNESS, ACCURACY AND COMPLETENESS OF THEIR WORK. **THE CONTRACTOR SHALL OBTAIN A COPY OF THE GEOTECHNICAL ENGINEER'S REPORT FOR THIS SITE AND COMPLY WITH RECOMMENDATIONS CONTAINED THEREIN.** IF ADDITIONAL SERVICES ARE REQUIRED, THE CONTRACTOR SHALL MAKE A REQUEST TO THE OWNER.

8. CONTRACTOR SHALL PROVIDE AND INSTALL EROSION CONTROL DEVICES (SILT FENCE OR OTHER METHODS) AT LIMITS OF CONSTRUCTION AND AROUND EACH STORM INLET PRIOR TO CONSTRUCTION, AND SHALL MAINTAIN SAID EROSION CONTROL DEVICES DURING CONSTRUCTION, ALL IN CONFORMANCE WITH CURRENT LOCAL, COUNTY AND STATE CRITERIA.

9. THE SITE SHALL BE CLEARED AS MAY BE NOTED ON THE PLANS, OF ALL OBSTRUCTIONS AND DELETERIOUS MATERIAL SUCH AS FENCES, WALLS, FOUNDATIONS, LOGS, SHRUBS, BRUSH, WEEDS, OTHER VEGETATION, AND ACCUMULATION OF RUBBISH OF WHATEVER NATURE. OFF-SITE DISPOSAL, INCLUDING ANY HAZARDOUS MATERIAL ENCOUNTERED, SHALL BE IN ACCORDANCE WITH APPLICABLE LOCAL, STATE, AND FEDERAL RULES AND REGULATIONS.

10. THE CONTRACTOR SHALL IMMEDIATELY NOTIFY INTERPLAN LLC. OF ANY DISCREPANCIES BETWEEN THE PLANS AND FIELD CONDITIONS PRIOR TO START OF CONSTRUCTION.

11. THE CONTRACTOR SHALL REMAIN SOLELY RESPONSIBLE FOR ANY DESIGN CHANGES WHICH HE MAY INCORPORATE INTO THE PLANS WITHOUT PRIOR WRITTEN CONSENT AND/OR APPROVAL FROM THE OWNER AND THE ENGINEER.

12. THE CONTRACTOR SHALL COORDINATE ALL WORK WITHIN EACH EXISTING RIGHT OF WAY WITH THE CITY OF WAUKESHA AND THE WISCONSIN DEPARTMENT OF TRANSPORTATION.

13. SCS SOILS: HOCHHEIM LOAM

14. STORMWATER MANAGEMENT IS PROVIDED BY EXISTING WET POND.

15. THE CONTRACTOR SHALL RESTORE OFF-SITE AREAS TO A CONDITION EQUAL TO OR BETTER THAN THE CONDITION EXISTING PRIOR TO COMMENCEMENT OF CONSTRUCTION.

16. ALL DISTURBED AREAS SHALL BE SODDED.

17. AT LEAST 30 DAYS PRIOR TO ANTICIPATED COMPLETION OF SITE CONSTRUCTION, THE FINAL CERTIFICATION PROCESS WILL BEGIN. THE CONTRACTOR SHALL PROVIDE DOCUMENTS AND INFORMATION, IN A TIMELY MANNER, TO ENGINEER, INCLUDING, WITHOUT LIMITATION:
a. SURVEYED "AS-BUILTS" PER AS-BUILT SURVEY SCOPE IN SPEC MANUAL.
b. COMPACTION AND DENSITY TEST REPORTS, AND
c. PRESSURE TESTING AND BACTERIOLOGICAL TESTING RESULTS, AS REQUIRED, FOR WATER DISTRIBUTION AND/OR WASTEWATER COLLECTION/TRANSMISSION SYSTEMS.

THE CONTRACTOR SHALL HAVE TWO (2) SETS OF AS-BUILT PLANS, SIGNED AND SEALED BY SURVEYOR OF RECORD, ON SITE THE DAY OF THE CIVIL ENGINEERING FINAL PUNCH LIST INSPECTION. THE GENERAL CONTRACTOR IS TO GIVE THE TWO AS-BUILT PLANS TO THE REPRESENTATIVE FROM INTERPLAN COMPLETING THE INSPECTION. IF ANY DEFICIENCIES ARE NOTED, ONE SET OF RED-LINED AS-BUILT PLANS WILL BE GIVEN TO THE GC FOR REVISIONS TO BE MADE. REVISED AS-BUILTS WILL NEED TO BE FORWARDED TO INTERPLAN BEFORE ANY CERTIFICATIONS CAN BE INITIATED.

18. ALL TRAFFIC CONTROL DEVICES, EQUIPMENT AND INSTALLATION SHALL MEET THE REQUIREMENTS OF THE LOCAL JURISDICTION AND/OR WISCONSIN DEPARTMENT OF TRANSPORTATION.

19. PARKING STALLS SHALL CONFORM WITH LOCAL CODE. ACCESSIBLE PARKING SPACES AND ACCESS ROUTES SHALL FURTHER CONFORM WITH CURRENT ADA REQUIREMENTS.

20. HANDICAP PAVEMENT MARKINGS AND SIGNAGE SHALL CONFORM WITH CURRENT ADA REQUIREMENTS AND LOCAL ORDINANCE.

21. LANDSCAPE SHALL BE TRIMMED TO ENSURE SIGHT VISIBILITY OF TRAFFIC CONTROL DEVICES.

22. ALL PAVEMENT IS DIMENSIONED TO FACE OF CURB.

23. ALL BUILDING DIMENSIONS AND TIES ARE TO OUTSIDE FACE. SEE ARCHITECTURAL PLANS.

24. ALL CURB RETURN RADII ARE 5' UNLESS NOTED.

25. BUILDING AND SITE IMPROVEMENTS ARE PARALLEL AND PERPENDICULAR TO TENNY AVENUE PROPERTY LINE.

GC NOTE:

A COPY OF THIS SHEET C0 SHALL BE PROVIDED TO ALL BIDDERS AND SUB-CONTRACTORS.

MISC046.DWG

SITE DATA

SITE AREA		49,006 SF	1,13 AC
PROPOSED			
IMPERVIOUS	PAVEMENT/SIDEWALKS	29,779 SF	61%
	H.D BUILDING	4,280 SF	9 % (77%)
	SHELL BUILDING	3,720 SF	7 %
TOTAL IMPERVIOUS		37.777 SF	
OPEN SPACE (GREEN)		11,229 SF	23%
ZONING		COMMERCIAL (C-1)	
FLOOR AREA RATIO		F.A.R. = 0.16	
BUILDING HEIGHT		MAX. ALLOWED	PROPOSED
		50 FT	24 FT (1 STORY)
BUILDING SETBACKS		REQUIRED	PROVIDED
FRONT (NORTH)		25 FT	62 FT
SIDE (EAST)		0 FT	57 FT
SIDE (SOUTH)		25 FT	43 FT
REAR (SOUTH)		0 FT	56 FT
LANDSCAPE BUFFER			
FRONT (NORTH)		15 FT	15 FT
SIDE (EAST)		5 FT	5 FT
SIDE (SOUTH)		5 FT	9 FT
REAR (SOUTH)		5 FT	5 FT
PARKING REQUIRED		REQUIRED	PROVIDED
(1 DOCTOR x 5) + (10 EMPLOYEES x 1) = 15 SPACES; SHELL BLDG. = T.B.D		15 SPACES	52 SPACES
PARKING PROVIDED			
REGULAR			49
HANDICAP			3
TOTAL			52

1

LEGENDS

	PROPOSED
PROPOSED CONTOUR / MEET EXISTING GRADE	73.50 / MEG
EDGE OF PAVEMENT	EOP
SIDEWALK	SW
GRADE BREAK	GB
HIGH POINT	HP
SPOT ELEVATION	12.55
DIRECTION OF FLOW AND PERCENT SLOPE	1.0%
STORM SEWER & INLET	
YARD DRAIN INLET	
DOWN SPOUT DRAINS	DSD
SANITARY SEWER & MANHOLE	SS
GREASE TRAP	
CLEANOUT	C.O.
FORCE MAIN	FM
WATER SERVICE	W
WATER MAIN	WM
FIRE HYDRANT	W
DDCVA	
FDC	
WATER METER	M
BACKFLOW PREVENTION DEVICE (BFP)	
GATE VALVE	
REDUCER	
UNDERGROUND TELEPHONE	UGT
UNDERGROUND ELECTRIC	UGE
SITE LIGHTING	
TRANSFORMER	T
AIR CONDITIONING UNIT	AC
PARKING SPACE TOTALS	8
DETAIL NUMBER / SHEET NUMBER	2 / C4
ZONING	B-3
CURRENT LAND USE	VACANT

INTERPLAN LLC

ARCHITECTURE
ENGINEERING
INTERIOR DESIGN
PROJECT MANAGEMENT

604 COURTLAND STREET
SUITE 100
ORLANDO, FLORIDA 32804
PH 407.645.5008
FX 407.629.9124

SEAL:

WISCONSIN
STUART A. ANDERSON
E-44904-6
ORLANDO, FL
PROFESSIONAL ENGINEER

Digitally signed by Stuart A Anderson
Date: 2018.06.22 10:08:48 -04'00'

STUART ANDERSON, P.E.
WI. REG. #44904-6

NO	DATE	REMARKS
1	5-18-18	CLIENT REVISIONS

REVISIONS

HEARTLAND DENTAL

SUNSET DR. & TENNY AVE.
WAUKESHA, WI 53189

PROJECT NO: 2017.0582
DATE: 3-1-18

C0
GENERAL NOTES

CHECKED: CDB DRAWN: H.M

COPYRIGHT © 2016 INTERPLAN LLC RESERVES COPYRIGHT & OTHER RIGHTS RESTRICTING THESE DOCUMENTS TO THE ORIGINAL SITE OR PURPOSE FOR WHICH THEY WERE PREPARED. REPRODUCTIONS, CHANGES OR ASSIGNMENTS ARE PROHIBITED.

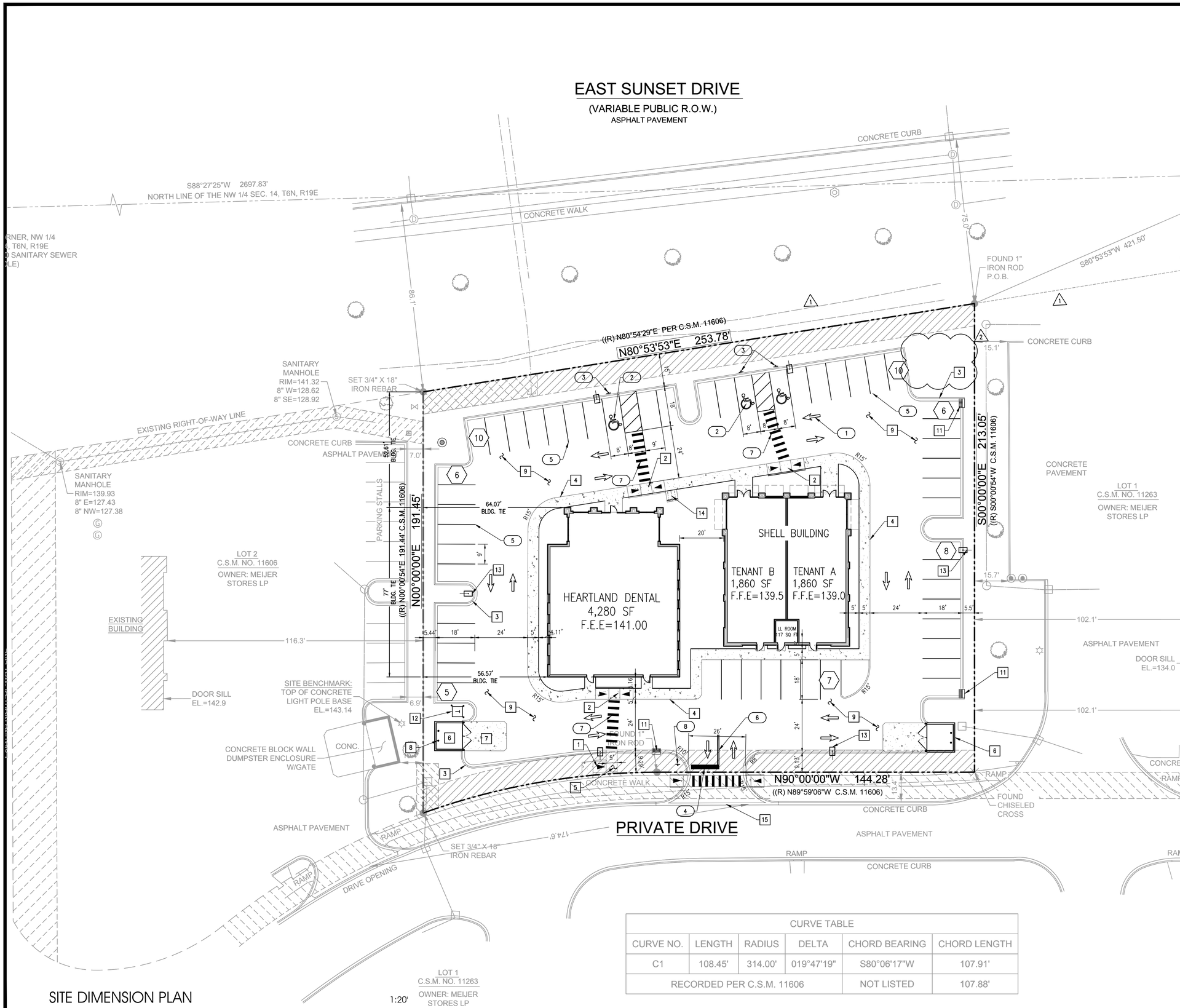

TRAFFIC CONTROL & SIGNAGE

1. DIRECTIONAL ARROW (11/C4) (TYP.)
2. HANDICAP PAVEMENT SYMBOLS (12/C4) (TYP.)
3. HANDICAP SIGN (13/C4)
4. 24" WIDE WHITE STOP BAR (TYP.)
5. PAVEMENT STRIPING (4" WHITE) (TYP.)
6. 4" DOUBLE YELLOW LINE
7. 24" WIDE WHITE CROSSWALK STRIPING
8. 30" STOP SIGN (R1-1)
9. NOT USED

– ALL TRAFFIC CONTROL SIGNAGE SHALL CONFORM TO "MANUAL ON UNIFORM TRAFFIC CONTROL DEVICES" BY THE U.S. DEPARTMENT OF TRANSPORTATION, FEDERAL HIGHWAY ADMINISTRATION.

– WORK DONE WITHIN SUNSET DRIVE R.O.W. SUBJECT TO CITY OF WAUKESHA REVIEW AND APPROVAL.

SITE NOTES

1. HANDICAP RAMP (14/C4)
2. SIDEWALK RAMP (15/C4)
3. CONC. CURB AND GUTTER (5/C4) (TYP.)
4. MONOLITHIC CURB AND SIDEWALK (6/C4)
5. CONCRETE SIDEWALK (8/C4)
6. DUMPSTER ENCLOSURE (1-3/C4)
7. CONCRETE APRON (7/C4)
8. BOLLARD (4/C4)
9. ASPHALT PAVEMENT (10/C4)
10. EXISTING FIRE HYDRANT (SEE SHEET C2)
11. DRAINAGE STRUCTURES
12. TRANSFORMER PAD
13. LIGHT POLE
14. BIKE RACK (9/C4)
15. VALLEY GUTTER (17/C4)

CURVE TABLE					
CURVE NO.	LENGTH	RADIUS	DELTA	CHORD BEARING	CHORD LENGTH
C1	108.45'	314.00'	019°47'19"	S80°06'17"W	107.91'
RECORDED PER C.S.M. 11606				NOT LISTED	107.88'

NORTH

GRAPHIC SCALE 20 0 20 40

REFER TO SHEET C0 FOR GENERAL NOTES, SPECIFICATIONS, AND LEGENDS, IN ADDITION TO SITE-SPECIFIC NOTES AND REQUIREMENTS.

SITE DIMENSION PLAN

INTERPLAN LLC
ARCHITECTURE
ENGINEERING
INTERIOR DESIGN
PROJECT MANAGEMENT

604 COURTLAND STREET
SUITE 100
ORLANDO, FLORIDA 32804
PH 407.645.5008
FX 407.629.9124

SEAL:

WISCONSIN STUART A. ANDERSON E-44904-6 PROFESSIONAL ENGINEER

Digitally signed by Stuart A Anderson Date: 2018.05.22 10:08:31 -04'00'

STUART ANDERSON, P.E.
WI. REG. #44904-6

NO	DATE	REMARKS
2	6-11-18	CITY COMMENTS
1	5-18-18	CLIENT REVISIONS

REVISIONS

HEARTLAND DENTAL

SUNSET DR. & TENNY AVE.
WAUKESHA, WI 53189

PROJECT NO: 2017.0582
DATE: 3-1-18

C1
SITE DIMENSION PLAN

CHECKED: CDB DRAWN: H.M

COPYRIGHT © 2016 INTERPLAN LLC RESERVES COPYRIGHT & OTHER RIGHTS RESTRICTING THESE DOCUMENTS TO THE ORIGINAL SITE OR PURPOSE FOR WHICH THEY WERE PREPARED. REPRODUCTIONS, CHANGES OR ASSIGNMENTS ARE PROHIBITED.

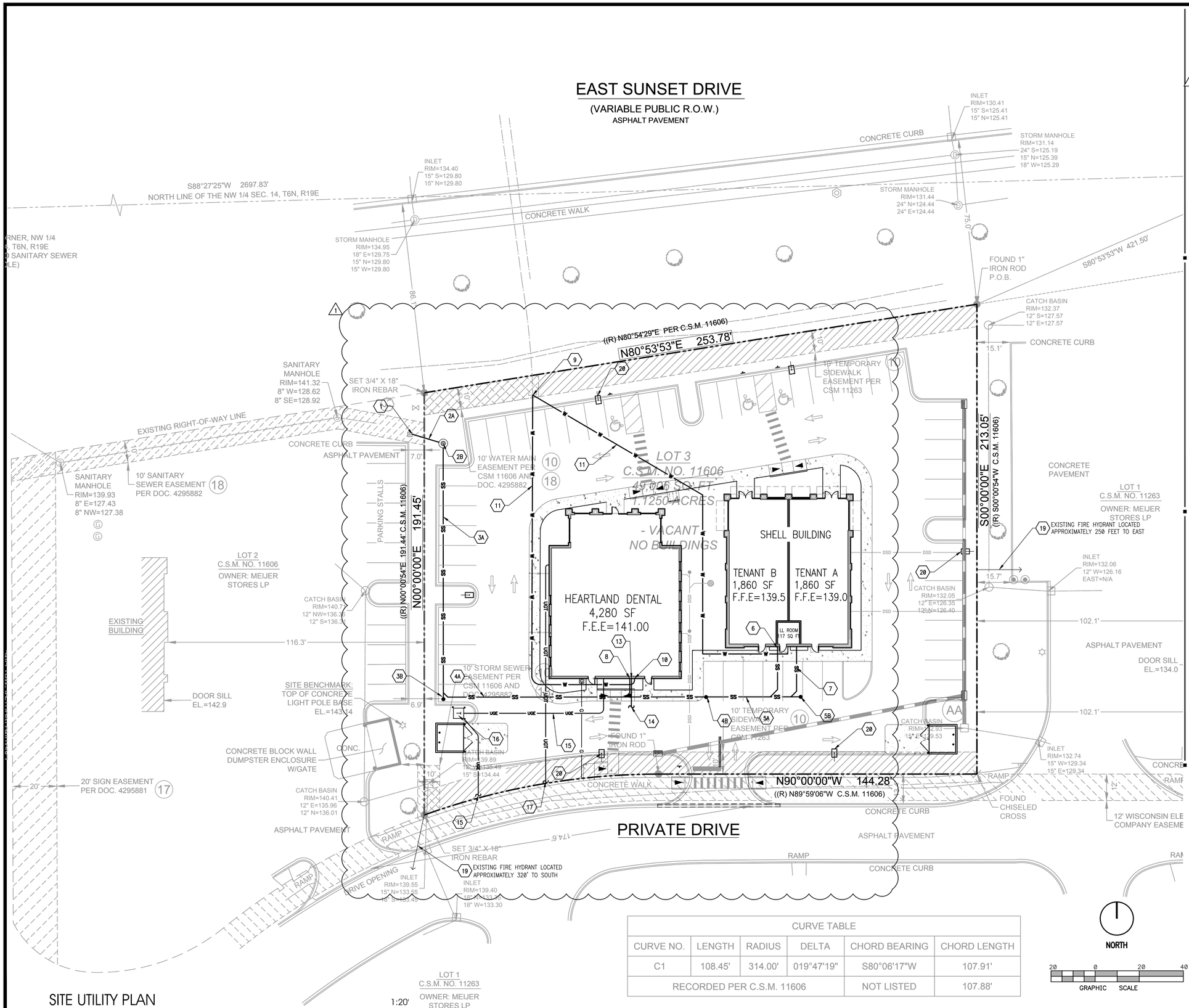

SITE UTILITY PLAN

1:20'

CURVE TABLE					
CURVE NO.	LENGTH	RADIUS	DELTA	CHORD BEARING	CHORD LENGTH
C1	108.45'	314.00'	019°47'19"	S80°06'17"W	107.91'
RECORDED PER C.S.M. 11606				NOT LISTED	107.88'

REFER TO SHEET C0 FOR GENERAL NOTES, SPECIFICATIONS, AND LEGENDS, IN ADDITION TO SITE-SPECIFIC NOTES AND REQUIREMENTS.

SITE UTILITY NOTES

SANITARY SEWER

1. CONNECT TO EXISTING 8" SANITARY SEWER STUB-OUT @ INV. = ± 129.50 (CONTRACTOR TO UNCOVER AND CONFIRM LOCATION, SIZE AND ELEVATION OF STUB OUT AT START OF CONSTRUCTION)
2A. 15 LF – 8" PVC @ 0.40 % SLOPE
2B. SANITARY SEWER MANHOLE #1 (18/C4) RIM = 140.85 INV. IN = 129.65 INV. OUT = 129.55
3A. 112 LF – 6" PVC @ 1.0% SLOPE
3B. CLEAN OUT INV. OUT = 130.77
4A. 118 LF – 6" PVC @ 1.0% SLOPE (16/C4) (TYP.)
4B. CLEAN OUT INV. OUT = 131.95
5A. 43 LF – 6" PVC @ 1.0% SLOPE
5B. CLEAN OUT INV. IN = 132.38
6. 27 LF –4" PVC @ 2.0% SLOPE CONNECT TO BUILDING SEWER LINE AT INV. ELEV =±132.80
7. 27 LF –4" PVC @ 2.0% SLOPE CONNECT TO BUILDING SEWER LINE AT INV. ELEV =±132.92
8. 10 LF – 4" PVC @ 2.0% SLOPE CONNECT TO BUILDING SEWER LINE @ INV. ELEV = ±131.87

DOMESTIC WATER

9. CONNECT TO EXISTING 2" WATER MAIN STUB-OUT (LOCATION AND SIZE FROM 'PANDA EXPRESS' PLANS, CONTRACTOR TO UNCOVER AND CONFIRM)
10. 1" WATER METER AND RPZ BACKFLOW PREVENTER (LOCATED INSIDE EACH BUILDING)
11. 2" PE WATER SERVICE TO BUILDING (2 PLACES)
12. NOT USED

IRRIGATION

13. 1" IRRIGATION METER AND RPZ BACKFLOW PREVENTER (LOCATED INSIDE BUILDING)
14. 1.5" IRRIGATION SERVICE FROM BUILDING (SEE IRRIGATION SITE PLAN)

ELECTRIC

15. CONTRACTOR SHALL COORDINATE UNDERGROUND ELECTRICAL SERVICE WITH WE ENERGIES FOR CONDUIT SIZE, CONNECTION POINT AND APPROVED TRANSFORMER LOCATION.
16. TRANSFORMER PAD. CONTRACTOR TO COORDINATE WITH WE ENERGIES FOR FINAL LOCATION OF TRANSFORMER TO BE SET.

PHONE

17. CONTRACTOR SHALL COORDINATE UNDERGROUND TELEPHONE SERVICE WITH AT&T TELEPHONE FOR CONDUIT SIZE, CONNECTION POINT.

GAS

18. CONTRACTOR SHALL COORDINATE UNDERGROUND GAS SERVICE WITH WE ENERGIES FOR CONDUIT SIZE, CONNECTION POINT.

FIRE

19. EXISTING FIRE HYDRANT (EXISTING)

STREET LIGHT

20. LIGHT POLE (SEE ELECTRICAL SITE PLAN)

INTERPLAN LLC
ARCHITECTURE
ENGINEERING
INTERIOR DESIGN
PROJECT MANAGEMENT

604 COURTLAND STREET
SUITE 100
ORLANDO, FLORIDA 32804
PH 407.645.5008
FX 407.629.9124

SEAL:

WISCONSIN STUART A. ANDERSON E-44904-6 ORLANDO, FL PROFESSIONAL ENGINEER

Digitally signed by Stuart A Anderson Date: 2018.05.22 10:08:34 -04'00'

STUART ANDERSON, P.E.
WI. REG. #44904-6

NO	DATE	REMARKS
1	5-18-18	CLIENT REVISIONS

REVISIONS

HEARTLAND DENTAL

SUNSET DR. & TENNY AVE.
WAUKESHA, WI 53189

PROJECT NO: 2017.0582
DATE: 3-1-18

C2
SITE UTILITY PLAN

CHECKED: CDB DRAWN: H.M

COPYRIGHT © 2016 INTERPLAN LLC RESERVES COPYRIGHT & OTHER RIGHTS RESTRICTING THESE DOCUMENTS TO THE ORIGINAL SITE OR PURPOSE FOR WHICH THEY WERE PREPARED. REPRODUCTIONS, CHANGES OR ASSIGNMENTS ARE PROHIBITED.

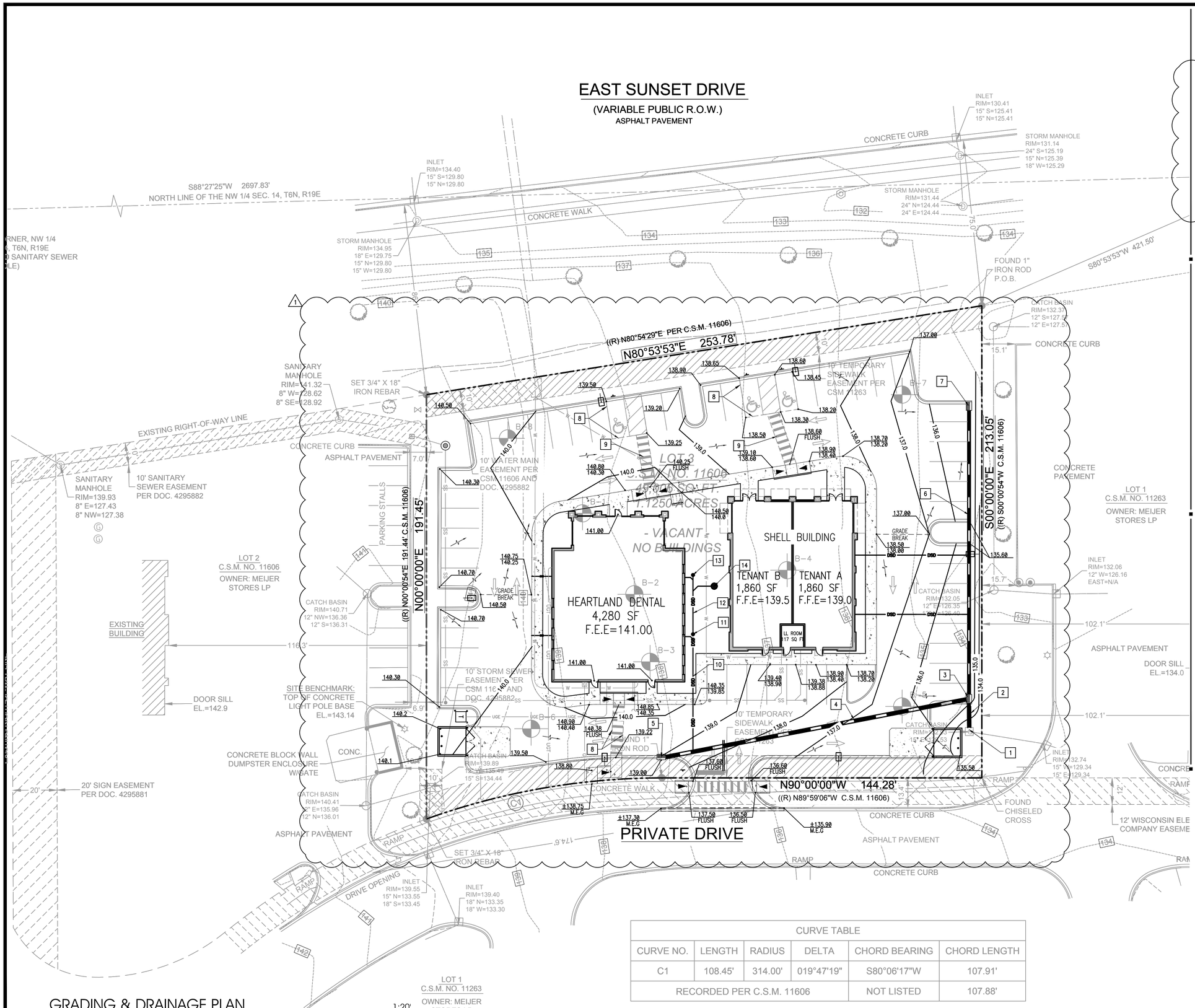

GRADING & DRAINAGE PLAN

DRAINAGE STRUCTURE TABLE

1. CORE DRILL AND CONNECT TO EXISTING DROP INLET @ INV. ELEV. = 129.63
2. 14 LF 15" HDPE @ 0.2%
3. INLET #1
   STORMWATER INLET WITH TYPE "W" GRATE
   GRATE ELEV. = 135.00
   INV ELEV. (N & W) = 129.76
   INV. ELEV. (S) = 129.66
4. 139 LF 15" HDPE @ 2%
5. INLET #2
   STORMWATER INLET WITH TYPE "W" GRATE
   GRATE ELEV. = 139.00
   INV. ELEV. (E) = 132.54
6. 129 LF 15" HDPE @ 2%
7. INLET # 3
   STORMWATER INLET WITH TYPE "W" GRATE
   GRATE ELEV. = 135.00
   INV. ELEV. (S) = 132.34
8. HANDICAP ZONE – MAX. 2.0% SLOPE IN ANY DIRECTION.
9. ACCESSIBLE ROUTE MAX. 2% CROSS SLOPE, 5% IN DIRECTION OF TRAVEL
10. 55 LF – 6" PVC @ 1.1% SLOPE
11. C.O.
    INV. = 132.4
12. 26 LF –6" PVC @ 1.1% SLOPE
13. C.O.
    INV. = 132.7
14. 18" YARD DRAIN
    WITH BEEHIVE GRATE
    RIM = 138.50

DOWNSPOUTS PIPE INFORMATION

NOTE:
CONTRACTOR SHALL FIELD VERIFY LOCATION, INVERT ELEVATION, MATERIALS AND PIPE SIZE BEFORE CONSTRUCTION BEGINS.

CONTRACTOR SHALL BEGIN STORMWATER PIPING CONSTRUCTION AT THE POINT OF CONNECTION OF EXISTING STORMWATER SYSTEM.

ALL RCP PIPE SHALL BE CLASS III UNLESS OTHERWISE NOTED ON PLANS AND INSTALLED IN ACCORDANCE WITH THE MANUFACTURE'S LATEST SPECIFICATIONS.

ALL RCP PIPE JOINTS SHALL BE WRAPPED IN FILTER FABRIC WRAP.

6" BELOW BASE MINIMUM PIPE COVER.

WHEN ANY ROOTS OR EXISTING TREE ARE ENCOUNTERED DURING LAND CLEARING AND/OR GRADING OF THE SITE, THE ROOTS MUST BE CUT OFF EVENLY WITH CLEAN SHARP PRUNING TOOLS. THE CONTRACTOR/DEVELOPER SHALL MINIMIZE THE DAMAGE TO EXISTING TREE ROOT SYSTEMS.

REFER TO SHEET C0 FOR GENERAL NOTES, SPECIFICATIONS, AND LEGENDS, IN ADDITION TO SITE-SPECIFIC NOTES AND REQUIREMENTS.

CURVE TABLE					
CURVE NO.	LENGTH	RADIUS	DELTA	CHORD BEARING	CHORD LENGTH
C1	108.45'	314.00'	019°47'19"	S80°06'17"W	107.91'
RECORDED PER C.S.M. 11606				NOT LISTED	107.88'

NORTH

20 0 20 40
GRAPHIC SCALE

INTERPLAN LLC
ARCHITECTURE
ENGINEERING
INTERIOR DESIGN
PROJECT MANAGEMENT

604 COURTLAND STREET
SUITE 100
ORLANDO, FLORIDA 32804
PH 407.645.5008
FX 407.629.9124

SEAL:

WISCONSIN STUART A. ANDERSON E-44904-6 PROFESSIONAL ENGINEER

Digitally signed by Stuart A Anderson
Date: 2018.05.22 10:08:37 -04'00'

STUART ANDERSON, P.E.
WI. REG. #44904-6

NO	DATE	REMARKS
1	5-18-18	CLIENT REVISIONS

REVISIONS

HEARTLAND DENTAL

SUNSET DR. & TENNY AVE.
WAUKESHA, WI 53189

PROJECT NO: 2017.0582
DATE: 3-1-18

C3
GRADING AND DRAINAGE PLAN

CHECKED: CDB DRAWN: H.M

COPYRIGHT © 2016 INTERPLAN LLC. RESERVES COPYRIGHT & OTHER RIGHTS RESTRICTING THESE DOCUMENTS TO THE ORIGINAL SITE OR PURPOSE FOR WHICH THEY WERE PREPARED. REPRODUCTIONS, CHANGES OR ASSIGNMENTS ARE PROHIBITED.

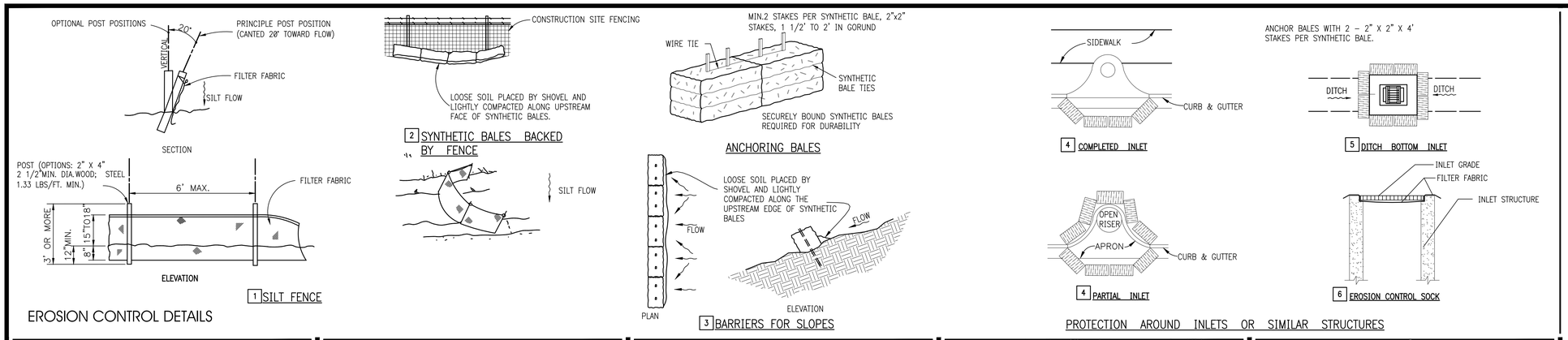

EROSION CONTROL DETAILS

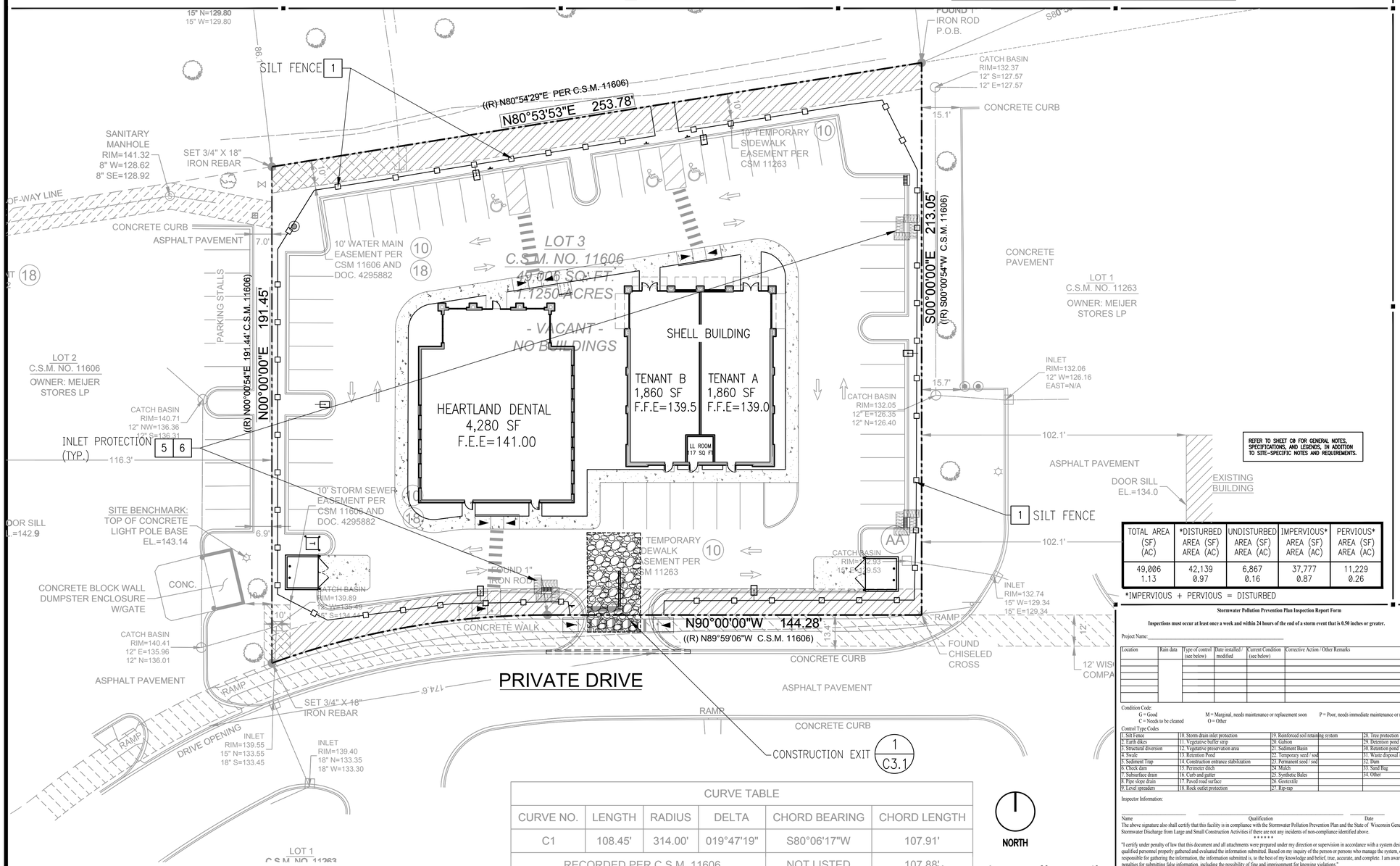

CURVE TABLE					
CURVE NO.	LENGTH	RADIUS	DELTA	CHORD BEARING	CHORD LENGTH
C1	108.45'	314.00'	019°47'19"	S80°06'17"W	107.91'
RECORDED PER C.S.M. 11606				NOT LISTED	107.88'

SWPPP / STORMWATER POLLUTION PREVENTION PLAN

POLLUTION CONTROL NOTES

ALL EROSION CONTROL MEASURES SHALL REMAIN IN PLACE UNTIL COMPLETION OF CONSTRUCTION.

1. ALL EROSION AND SEDIMENT CONTROL WORK SHALL CONFORM WITH LOCAL CITY/COUNTY AND WATER MANAGEMENT DISTRICT SPECIFICATIONS, SUBJECT TO AUTHORIZED AND APPROVED VARIANCES, WAIVERS AND/OR CONDITIONS OF SITE PERMITS.

2. EROSION AND SEDIMENT CONTROL MEASURES SHALL BE PLACED PRIOR TO OR AS THE FIRST STEP IN, CONSTRUCTION. SEDIMENT CONTROL PRACTICES WILL BE APPLIED AS A PERIMETER DEFENSE AGAINST ANY TRANSPORTATION OF SILT OFF THE SITE.

3. ALL AREAS AFFECTED BY THIS WORK SHALL BE RESTORED TO A CONDITION EQUAL TO OR BETTER THAN EXISTING CONDITION, UNLESS SPECIFICALLY EXEMPTED BY THE PLANS. THE COST FOR SUCH RESTORATION SHALL BE INCIDENTAL TO OTHER CONSTRUCTION AND NO ADDITIONAL COMPENSATION SHALL BE ALLOWED.

4. THE CONTRACTOR SHALL IMMEDIATELY NOTIFY THE ENGINEER OF ANY DISCREPANCIES BETWEEN THESE PLANS AND FIELD CONDITIONS PRIOR TO CONSTRUCTION.

5. PRIOR TO CONSTRUCTION THE CONTRACTOR SHALL PROVIDE TREE PROTECTION BARRIERS TO MEET THE REQUIREMENTS OF LOCAL SPECIFICATIONS.

6. THE CONTRACTOR SHALL SELECTIVELY CLEAR ONLY THE AREAS REQUIRED FOR CONSTRUCTION AND STABILIZE ANY POTENTIAL EROSION AREAS IMMEDIATELY FOLLOWING COMPLETION OF CONSTRUCTION.

7. CONTRACTOR SHALL KEEP ANY AND ALL SAND, SILT OR OTHER DEBRIS FROM MOVING OFF-SITE. USE AND MAINTAIN SILT FENCE JUST INSIDE OF PROPERTY LINE.

8. CONTRACTOR SHALL BLOCK INTRUSION OF SAND, SILT OR OTHER DEBRIS INTO ANY DRAINAGE OR SANITARY SEWER STRUCTURE OR PIPING ON OR ADJACENT TO SITE.

9. ALL CLEARED AREAS FOR IMPROVEMENT AND/OR CONSTRUCTION SHALL BE WATERED TO PREVENT WIND EROSION.

10. FOR ADDITIONAL INFORMATION AND DETAILS, SEE WISDOT '8e' SERIES DETAILS.

11. UNLESS SPECIFIED, SILT FENCES MAY BE USED IN LIEU OF SYNTHETIC BARRIERS.

12. ADDITIONAL POSTS AND RAILS MAY BE NECESSARY TO SECURE AND SUPPORT BARRIERS.

13. ADDITIONAL BARRIER LENGTHS MAY BE REQUIRED BY THE COUNTY ENGINEER OR BY REGULATORY AGENCIES.

14. FILTER FABRIC MUST BE INSTALLED UNDER ALL INLET GRATES, AT ALL TIMES WHEN INLETS ARE NOT PROTECTED BY SILT FENCE OR SYNTHETIC BALES, UNTIL THE LIMEROCK BASE IS FINISHED AND PRIMED.

15. THE CONTRACTOR IS REQUIRED TO HAVE THIS PLAN ALONG WITH A COPY OF THE NPDES NOTICE OF INTENT POSTED IN A VISIBLE LOCATION ON THE CONSTRUCTION SITE AT ALL TIMES.

16. "CONTRACTOR IS REQUIRED BY NPDES TO KEEP A LOG ON SITE FOR THE SOIL EROSION AND SEDIMENT CONTROL MEASURES INDICATED ON THE PLAN. THE LOG SHALL CONTAIN DATES FOR: INSTALLATION OF CONTROL MEASURES, MAJOR SITE CONSTRUCTION ACTIVITIES, INSPECTION ON AT LEAST A WEEKLY BASIS AND INSPECTION AFTER ANY RAINFALL EVENT THAT IS 1/2" OR GREATER".

17. THE CONTRACTOR IS REQUIRED TO SUBMIT A COPY OF THIS LOG ALONG WITH A NOTICE OF TERMINATION TO THE WISCONSIN DEPARTMENT OF NATURAL RESOURCES UPON THE COMPLETION OF CONSTRUCTION.

REFER TO SHEET C0 FOR GENERAL NOTES, SPECIFICATIONS, AND LEGENDS, IN ADDITION TO SITE-SPECIFIC NOTES AND REQUIREMENTS.

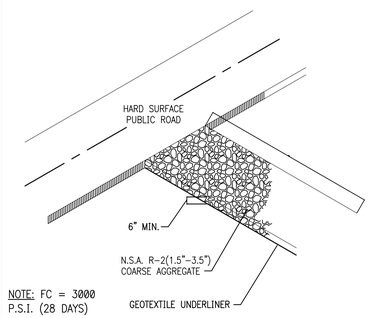

NOTE: FC = 3000 P.S.I. (28 DAYS)

1 CRUSHED STONE CONSTRUCTION EXIT
NTS

TOTAL AREA (SF) (AC)	*DISTURBED AREA (SF) AREA (AC)	UNDISTURBED AREA (SF) AREA (AC)	IMPERVIOUS* AREA (SF) AREA (AC)	PERVIOUS* AREA (SF) AREA (AC)
49,006 1.13	42,139 0.97	6,867 0.16	37,777 0.87	11,229 0.26

*IMPERVIOUS + PERVIOUS = DISTURBED

Stormwater Pollution Prevention Plan Inspection Report Form

Inspections must occur at least once a week and within 24 hours of the end of a storm event that is 0.50 inches or greater.

Project Name:_____

Location	Rain data	Type of control (see below)	Date installed / modified	Current Condition (see below)	Corrective Action / Other Remarks

Condition Code:
G = Good
C = Needs to be cleaned
M = Marginal, needs maintenance or replacement soon
O = Other
P = Poor, needs immediate maintenance or replacement

Control Type Codes

1. Silt Fence	10. Storm drain inlet protection	19. Reinforced soil retaining system	28. Tree protection
2. Earth dikes	11. Vegetative buffer strip	20. Gabion	29. Detention pond
3. Structural diversion	12. Vegetative preservation area	21. Sediment Basin	30. Retention pond
4. Swale	13. Retention Pond	22. Temporary seed / sod	31. Waste disposal / housekeeping
5. Sediment Trap	14. Construction entrance stabilization	23. Permanent seed / sod	32. Dam
6. Check dam	15. Perimeter ditch	24. Mulch	33. Sand Bag
7. Subsurface drain	16. Curb and gutter	25. Synthetic Bales	34. Other
8. Pipe slope drain	17. Paved road surface	26. Geotextile	
9. Level spreaders	18. Rock outlet protection	27. Rip-rap	

Inspector Information:

Name Qualification Date

The above signature also shall certify that this facility is in compliance with the Stormwater Pollution Prevention Plan and the State of Wisconsin Generic Permit for Stormwater Discharge from Large and Small Construction Activities if there are not any incidents of non-compliance identified above.

* * * * * *

"I certify under penalty of law that this document and all attachments were prepared under my direction or supervision in accordance with a system designed to assure that qualified personnel properly gathered and evaluated the information submitted. Based on my inquiry of the person or persons who manage the system, or those persons directly responsible for gathering the information, the information submitted is, to the best of my knowledge and belief, true, accurate, and complete. I am aware that there are significant penalties for submitting false information, including the possibility of fine and imprisonment for knowing violations."

_____
Name (Responsible Authority) Date

ENGINEER'S CERTIFICATIONS:

"I certify under penalty of law that this document and all attachments were prepared under my direction or supervision in accordance with a system designed to assure that qualified personnel properly gathered and evaluated the information submitted. Based on my inquiry of the person or persons who manage the system, or those persons directly responsible for gathering the information, the information submitted is, to the best of my knowledge and belief, true, accurate, and complete. I am aware that there are significant penalties for submitting false information, including the possibility of fine and imprisonment for knowing violations."

_____ _____
STUART ANDERSON, P.E. # 44904-6 Date

OWNER/AGENT CERTIFICATIONS:

I HAVE REVIEWED THIS PLAN AND AGREE TO COMPLY WITH THE REQUIREMENTS SHOWN HEREON.

_____ _____
OWNER/AUTHORIZED REPRESENTATIVE Date

INTERPLAN LLC
ARCHITECTURE
ENGINEERING
INTERIOR DESIGN
PROJECT MANAGEMENT

604 COURTLAND STREET
SUITE 100
ORLANDO, FLORIDA 32804
PH 407.645.5008
FX 407.629.9124

SEAL:

WISCONSIN STUART A. ANDERSON E-44904 ORLANDO, FL PROFESSIONAL ENGINEER

Digitally signed by Stuart A Anderson Date: 2018.05.22 10:05:00 -04'00'

STUART ANDERSON, P.E.
WI. REG. #44904-6

NO	DATE	REMARKS

REVISIONS

HEARTLAND DENTAL

SUNSET DR. & TENNY AVE.
WAUKESHA, WI 53189

PROJECT NO: 2017.0582
DATE: 3-1-18

C3.1
SWPPP

CHECKED: CDB DRAWN: H.M

COPYRIGHT © 2016 INTERPLAN LLC RESERVES COPYRIGHT & OTHER RIGHTS RESTRICTING THESE DOCUMENTS TO THE ORIGINAL SITE OR PURPOSE FOR WHICH THEY WERE PREPARED. REPRODUCTIONS, CHANGES OR ASSIGNMENTS ARE PROHIBITED.

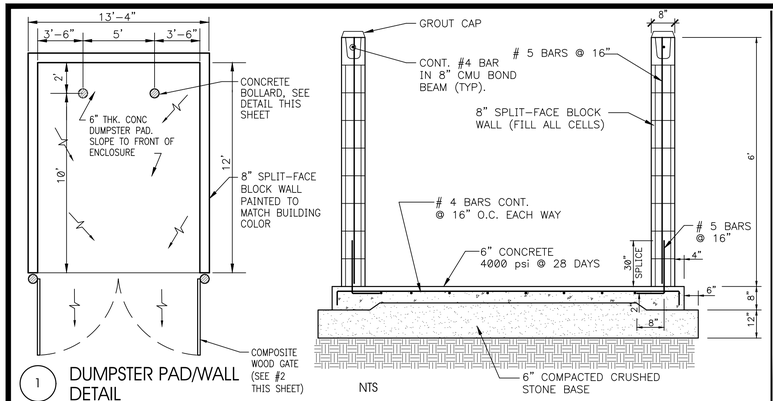

1 DUMPSTER PAD/WALL DETAIL NTS

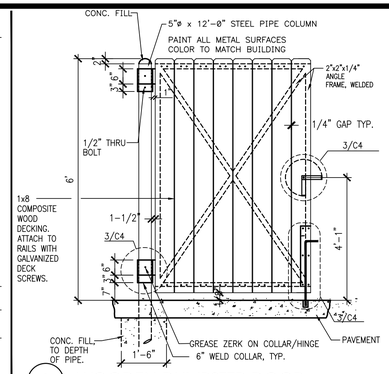

2 WOODEN DUMPSTER DOOR NTS

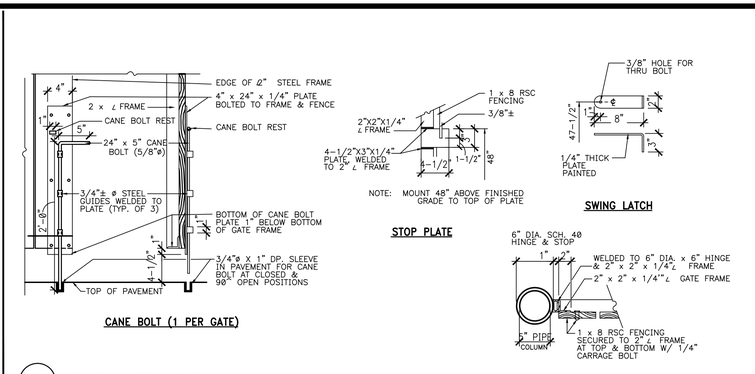

3 GATE LATCH DETAIL NTS

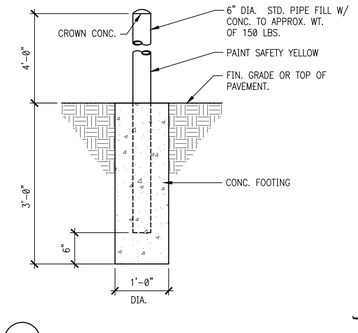

4 BOLLARD NTS

MISC006.DWG

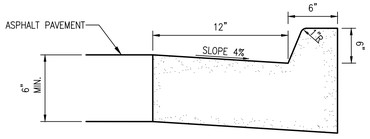

5 CONCRETE CURB AND GUTTER
3,500 PSI (MIN.) CONCRETE
NTS

PVT014.DWG

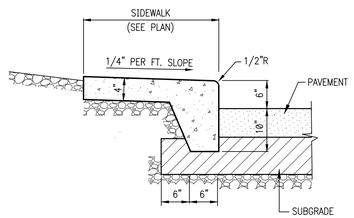

6 MONOLITHIC CURB & SIDEWALK DETAIL
(3,500 PSI (MIN))
NTS

PVT006.DWG

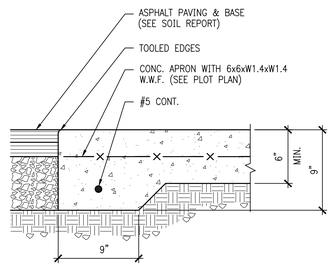

CONCRETE PAVEMENT TO BE PLACED ON A COMPACTED 6" THICK CRUSHED STONE BASE

7 CONCRETE APRON
3,500 PSI (MIN.) CONCRETE
NTS

PVT014.DWG

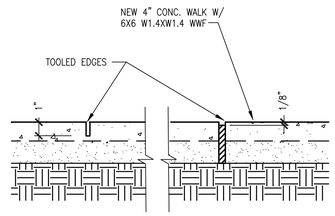

NOTE:
EXPANSION JOINTS SHALL BE LOCATED AT ALL CONCRETE WALK INTERSECTIONS, AT ALL DOOR OPENINGS AND AT 20' O.C. MAXIMUM.

EXPANSION JOINT (1/4" PREMOLDED ASPHALT STRIP) SHALL BE SET 1/8" BELOW TOP OF WALK.
SCORE MARK (1" DEPTH) SHALL BE 5' (MAX.) O.C.

8 CONCRETE WALK
(3,500 PSI (MIN))
NTS

PVT019.DWG

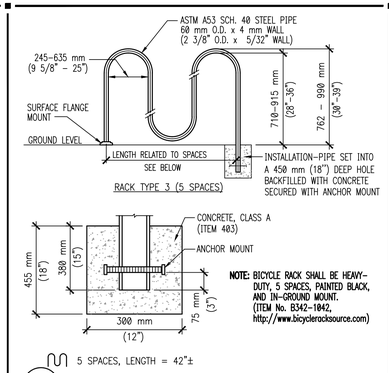

9 BIKE RACK NTS

KEY TO TYPICAL PAVEMENT SECTIONS

1. 1 3/4" HOT MIX ASPHALT SURFACE COURSE
2. 1 3/4" HOT MIX ASPHALT BASE COURSE
3. 8" DENSE GRADED CRUSHED STONE BASE
4. COMPACTED AND PROOFROLLED SUBGRADE
5. GRASS AREA
6. MONOLITHIC CURB AND SIDEWALK
7. 6" VERTICAL CURB

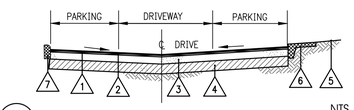

10 TYPICAL PAVEMENT SECTION NTS

PVT017.DWG

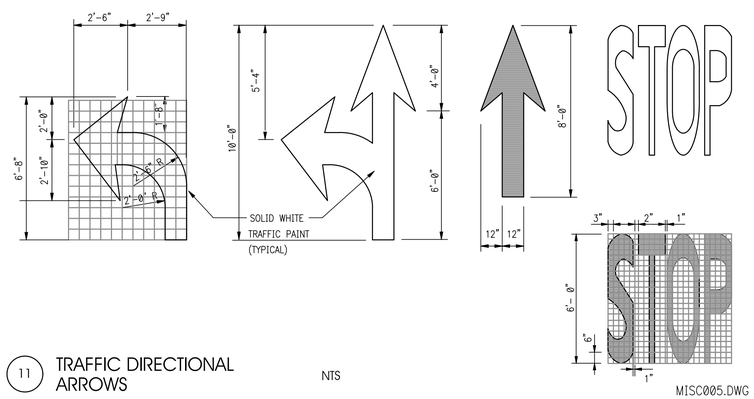

11 TRAFFIC DIRECTIONAL ARROWS NTS

MISC005.DWG

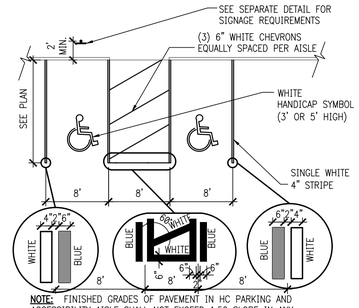

NOTE: FINISHED GRADES OF PAVEMENT IN HC PARKING AND ACCESSIBILITY AISLE SHALL NOT EXCEED 1:50 SLOPE IN ANY DIRECTION.
SEE PLAN FOR STYLE OF HANDICAP RAMP
HANDICAP STRIPING SHALL CONFORM TO 2010 AADAG (LATEST EDITION)

12 HANDICAP STRIPING NTS

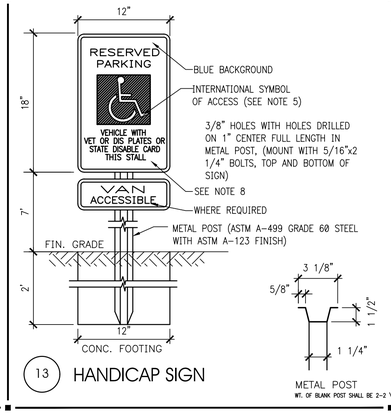

NOTES:

1. ONE (1) SIGN REQUIRED FOR EACH PARKING SPACE.
2. METAL POST TO BE GALVANIZED. ALL BOLTS, NUTS WASHERS AND SCREWS MUST BE RUSTPROOF.
3. CONCRETE FOR FOOTING SHALL BE PORTLAND CEMENT AND HAVE A MINIMUM COMPRESSIVE STRENGTH OF 3,000 p.s.i.
4. SIGNS WILL BE FABRICATED BY USING REFLECTING COATING IN THE SYMBOL, MESSAGE AND BORDER APPLIED TO A SHEET ALUMINUM BACKING (.080) IN THICKNESS.
5. MESSAGE LETTERING SHALL BE UPPER CASE (WHITE)(SERIES B) 2" HIGH IN ACCORDANCE WITH MANUAL OF UNIFORM TRAFFIC CONTROL DEVICES.
6. THE SYMBOL IS COMPOSED OF TWO ELEMENTS, A WHITE WHEELCHAIR FIGURE (WHICH SHOULD ALWAYS FACE RIGHT) ON A SQUARE BACKGROUND, INTERNATIONAL BLUE IN COLOR (FED. STD. 595a, COLOR #15180).
7. SIGN POST SHALL BE MIN. 1' CLEAR FROM BACK OF WHEEL STOP OR CURB.
8. INSTALL 'VAN ACCESSIBLE' SIGN UNDER 'RESERVED PARKING' SIGN WHERE REQUIRED.

13 HANDICAP SIGN NTS

NOTE 1:
REFERENCE WISDOT STANDARD DETAIL 8d5 AND DESIGN NOTES FOR RAMPS IN R.O.W.

NOTE 2:
CONSTRUCT RAMP TO LEAST POSSIBLE SLOPE (MAX = 1:12). CROSS SLOPE OF RAMP AND LANDING SHALL NOT EXCEED 1:50.

NOTE 3:
RAMP GREATER THAN A 6" RISE REQUIRES HANDRAILS.

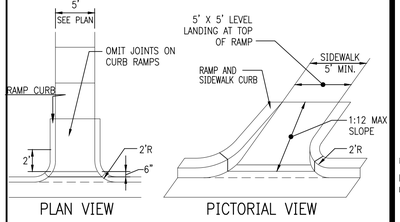

14 HANDICAP END RAMP
3000 PSI (MIN.) CONCRETE
NTS

RAMP005.DWG

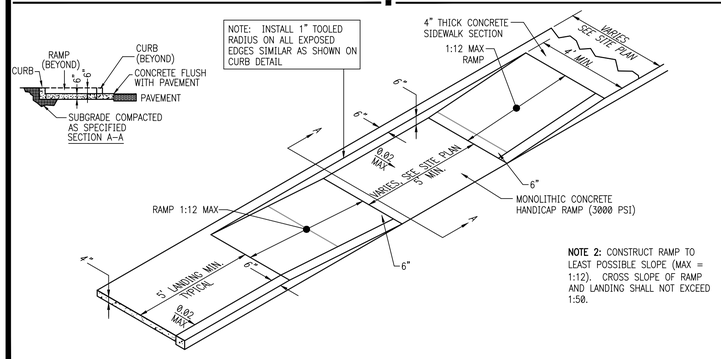

NOTE 2: CONSTRUCT RAMP TO LEAST POSSIBLE SLOPE (MAX = 1:12). CROSS SLOPE OF RAMP AND LANDING SHALL NOT EXCEED 1:50.

15 SIDE WALK HANDICAP RAMP
3000 PSI (MIN.) CONCRETE
NTS

RAMP011.DWG

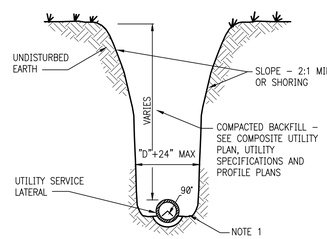

NOTE 1
DEPTH FOR REMOVAL OF UNSUITABLE MATERIAL SHALL BE AS REQUIRED TO REACH SUITABLE FOUNDATION AND SHALL BE IN ACCORDANCE WITH ASTM D-2321

16 TRENCH DETAIL NTS

DRG010.DWG

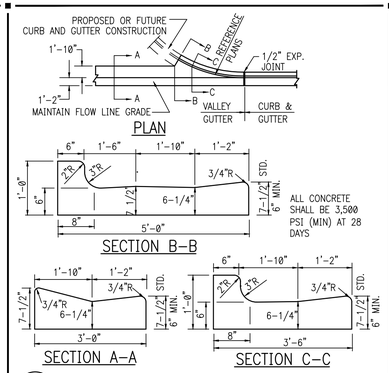

17 VALLEY GUTTER NTS

PVT001.DWG

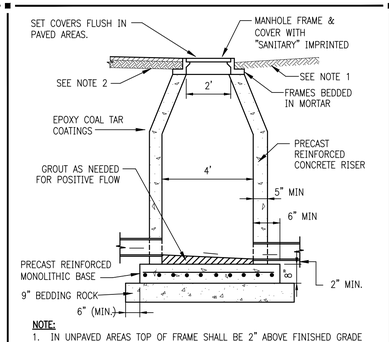

NOTE:
1. IN UNPAVED AREAS TOP OF FRAME SHALL BE 2" ABOVE FINISHED GRADE
2. ALL IN-PAVEMENT STRUCTURES MUST CONFORM TO H20 LOADING STANDARDS

18 MANHOLE NTS

UTL003.DWG

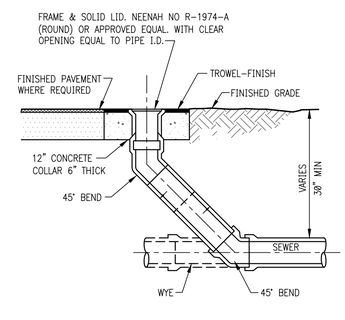

19 CLEANOUT NTS

UTL043.DWG

INTERPLAN LLC
ARCHITECTURE
ENGINEERING
INTERIOR DESIGN
PROJECT MANAGEMENT

604 COURTLAND STREET
SUITE 100
ORLANDO, FLORIDA 32804
PH 407.645.5008
FX 407.629.9124

SEAL:

WISCONSIN STUART A. ANDERSON E-44904-6 PROFESSIONAL ENGINEER

Digitally signed by Stuart A Anderson
Date: 2018.05.22 10:05:07 -04'00'

STUART ANDERSON, P.E.
WI. REG. #44904-6

NO	DATE	REMARKS

REVISIONS

HEARTLAND DENTAL

SUNSET DR. & TENNY AVE.
WAUKESHA, WI 53189

PROJECT NO: 2017.0582
DATE: 3-1-18

C4
DETAILS

CHECKED: CDB DRAWN: H.M

COPYRIGHT © 2016 INTERPLAN LLC. RESERVES COPYRIGHT & OTHER RIGHTS RESTRICTING THESE DOCUMENTS TO THE ORIGINAL SITE OR PURPOSE FOR WHICH THEY WERE PREPARED. REPRODUCTIONS, CHANGES OR ASSIGNMENTS ARE PROHIBITED.

8D17: Manholes, Manhole and Inlet Covers

INLET COVERS

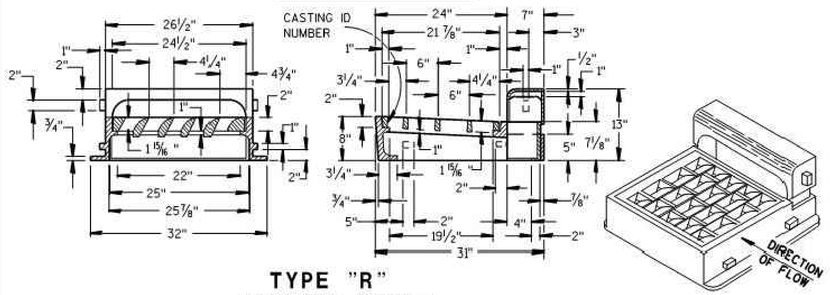

TYPE "R"
SHOWING SPECIAL GRATE NO. 1
(TO BE NOTED AS R-1 IN DRAINAGE TABLE)

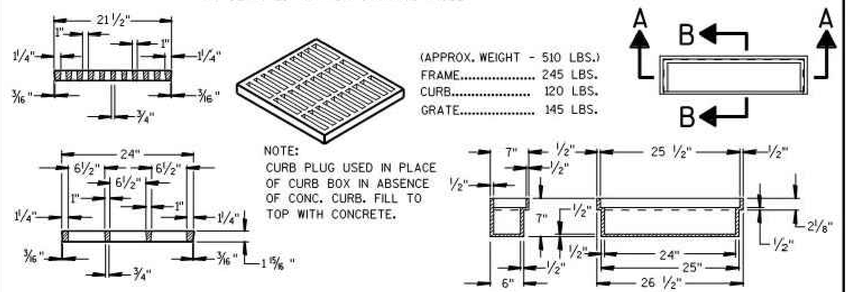

GRATE FOR TYPE "R" INLET COVER
(GRATE.....150 LBS.)
(TO BE USED UNLESS OTHERWISE NOTED IN DRAINAGE TABLE)

SECTION B-B SECTION A-A

SPECIAL CURB PLUG "P"
(CURB PLUG.....85 LBS.)
(TO BE NOTED AS R-P IN DRAINAGE TABLE)

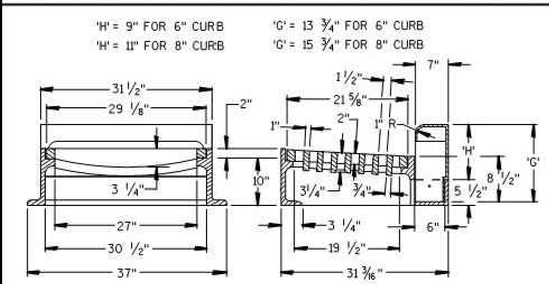

TYPE "W"

(APPROX. WEIGHT - 670 LBS.)
FRAME..... 350 LBS.
CURB BOX..... 135 LBS.
GRATE..... 185 LBS.

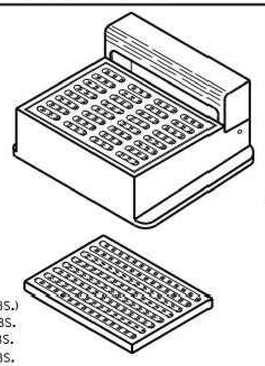

ALTERNATE GRATE
(FOR EXPRESSWAY RAMPS)
TYPES "W" & "X"

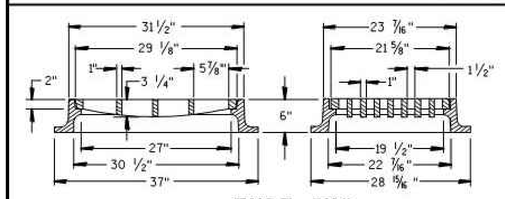

TYPE "X"
(APPROX. WEIGHT - 470 LBS.)

MANHOLE COVER

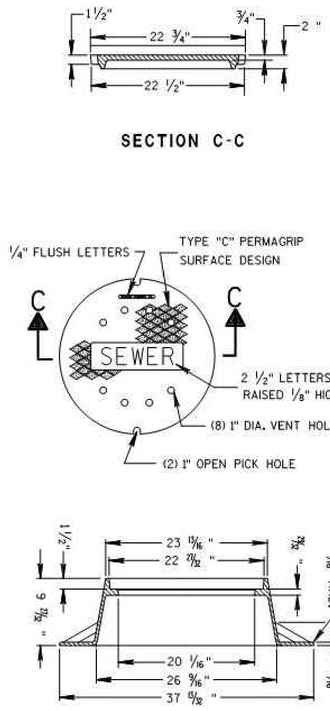

SECTION C-C

TYPE "Q"
(APPROX. WEIGHT - 290 LBS.)

TABLE OF DIMENSIONS

TYPE	'A'	'B'	'C'
11	3'-6"	2'-8"	12" - 36"*
12	4'-0"	3'-8"	12" - 42"**
13	5'-0"	5'-8"	42" - 48"
14	6'-0"	7'-8"	54" - 60"

* 12" - 21" FOR PRECAST MANHOLES
** 12" - 24" FOR PRECAST MANHOLES

THE FIRST STEP SHALL BE PLACED 16" ABOVE THE BENCH.

MANHOLE

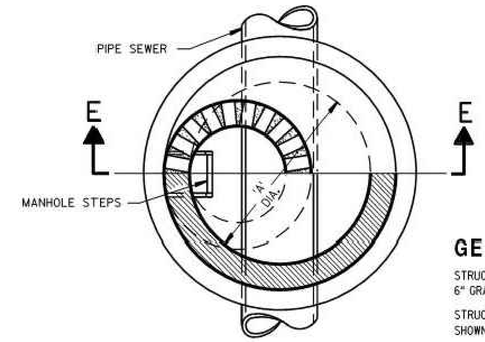

HALF SECTION D-D

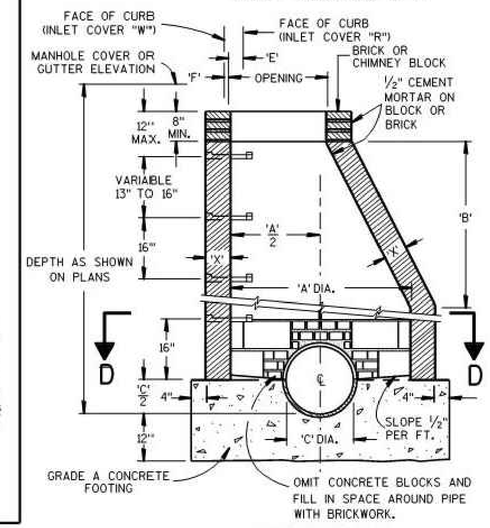

SECTION E-E

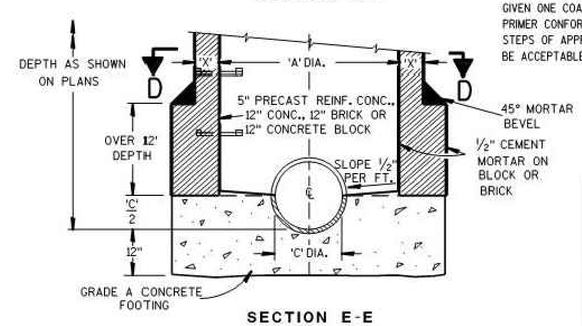

SECTION E-E

TYPES 11, 12, 13 & 14

TABLE OF OPENING DIMENSIONS

TYPE	COVER DESCRIPTION	OPENING	'E'	'F'
"O"	ROUND	2'-2" DIA.	—	—
"W"	CURB BOX	1'-8" X 2'-6"	—	1"
"X"	INLET	1'-10" X 2'-6"	—	—
"R"	CURB BOX	2'-0" X 2'-1"	4"	—

GENERAL NOTES

STRUCTURE WALL THICKNESS 'X' TO BE 8" BRICK, 6" CONCRETE BLOCK, 6" GRADE A CONCRETE OR 5" PRECAST REINFORCED CONCRETE.

STRUCTURE FOOTINGS ARE TO BE GRADE A CONCRETE OF THE THICKNESS SHOWN IN THE DETAIL OR 5" PRECAST REINFORCED CONCRETE.

REINFORCEMENT FOR 5" PRECAST REINFORCED CONCRETE SHALL BE 6" X 6" W16 X W16 WELDED SREEL WIRE FABRIC AND SHALL BE EMBEDDED 2" CLEAR.

PRECAST INLET UNITS AND BASES SHALL CONFORM TO THE PERTINENT REQUIREMENTS OF AASHTO DESIGNATION M 199.

PRECAST CONCRETE FLAT SLAB TOPS MAY BE USED ON THE STRUCTURES. THE TOPS SHALL BE INSTALLED ON A BED OF MORTAR.

PRECAST REINFORCED BASES SHALL BE PLACED ON A BED OF MATERIAL AT LEAST 6" IN DEPTH, WHICH MEETS THE REQUIREMENTS FOR GRANULAR BACK-FILL. THIS BEDDING SHALL BE COMPACTED AND PROVIDE UNIFORM SUPPORT FOR THE ENTIRE AREA OF THE BASE.

SET FRAME ELEVATION 0.03 FT. LOWER THAN ELEVATION INDICATED ON THE PLANS.

THE CONTRACTOR MAY FORM AND POUR MONOLITHIC CONCRETE INVERT PROVIDED THE PIPE ENDS ARE EXTENDED INTO THE M.H. AND NOT TERMINATED WITHIN THE M.H. WALLS.

MANHOLE STEPS

STEPS MEETING THE FOLLOWING REQUIREMENTS SHALL BE INSTALLED IN ALL STRUCTURES OVER 5 FEET IN DEPTH; 16 INCH C-C MAX. SPACING; PROJECT A MINIMUM CLEAR DISTANCE OF 4 INCHES FROM THE WALL AT THE POINT OF EMBEDMENT; MINIMUM WALL EMBEDMENT OF 3 INCHES IN PRECAST MANHOLE AND 6 INCHES IN 8 INCH BRICK OR 6 INCH BLOCK MANHOLE; TREAD OF STEP SHALL HAVE A NON-SKID SURFACE AND BE FLANKED BY CLEATS, WITH A MINIMUM OF 10 INCHES CLEAR BETWEEN CLEATS, TO PREVENT FOOT SLIPPING OFF THE EDGE CLEATS SHALL BE A MINIMUM OF ¾ INCH HIGH BY ¾ INCH WIDE HAVING A MINIMUM THICKNESS OF ⅜ INCH. STEPS SHALL BE CAPABLE OF SUPPORTING A CONCENTRATED LOAD OF 300 LBS. FERROUS METAL STEPS NOT PAINTED OR TREATED TO RESIST CORROSION SHALL HAVE A MINIMUM CROSS SECTIONAL DIMENSION OF 1 INCH.

SOLID ALUMINUM STEPS SHALL HAVE A MINIMUM CROSS SECTIONAL DIMENSION OF 0.75 INCH. ALUMINUM SURFACES TO BE EMBEDDED IN CONCRETE SHALL BE GIVEN ONE COAT OF SUITABLE QUALITY PAINT, SUCH AS ZINC CHROMATE PRIMER CONFORMING TO FEDERAL SPECIFICATION TT-P-645 OR EQUIVALENT. STEPS OF APPROVED POLYPROPYLENE PLASTIC COATED REINFORCING BAR WILL BE ACCEPTABLE.

MANHOLES, MANHOLE & INLET COVERS

STATE OF WISCONSIN DEPARTMENT OF TRANSPORTATION

APPROVED
4/12/2011 — DATE
/S/ Jerry H. Zogg — ROADSIDE STANDARDS DEVELOPMENT ENGINEER
FHWA

S.D.D. 8 D 17-6

INTERPLAN LLC
ARCHITECTURE
ENGINEERING
INTERIOR DESIGN
PROJECT MANAGEMENT

604 COURTLAND STREET
SUITE 100
ORLANDO, FLORIDA 32804
PH 407.645.5008
FX 407.629.9124

SEAL:
STATE OF WISCONSIN — STUART A. ANDERSON — E-44904 — PROFESSIONAL ENGINEER
Digitally signed by Stuart A Anderson
Date: 2018.05.22 10:05:00-04'00'

STUART ANDERSON, P.E.
WI. REG. #44904-6

NO DATE REMARKS
REVISIONS

HEARTLAND DENTAL
SUNSET DR. & TENNY AVE.
WAUKESHA, WI 53189

PROJECT NO: 2017.0582
DATE: 3-1-18

C4.1
DETAILS

CHECKED: CDB DRAWN: H.M

COPYRIGHT © 2016 INTERPLAN LLC RESERVED COPYRIGHT & OTHER RIGHTS RESTRICTING THESE DOCUMENTS TO THE ORIGINAL SITE OR PURPOSE FOR WHICH THEY WERE PREPARED. REPRODUCTIONS, CHANGES OR ASSIGNMENTS ARE PROHIBITED.

Landreth Luminaire Schedule											
Label	Qty	Symbol	[MANUFAC]	Description	LLF	Lum. Lumens	Lum. Watts	Total Watts	Cutoff Class	BUG Rating
SLA	6		Lithonia Lighting	DSX1 LED P6 40K T3M MVOLT XPA HS DDBXD; POLE MOUNTED @ 20' AFG	1.000	14985	163	978	N.A.	B2-U0-G3

Calculation Summary							
Label	CalcType	Units	Avg	Max	Min	Avg/Min	Max/Min
PARKING LOTS	Illuminance	Fc	2.56	6.4	0.1	25.60	64.00
PROPERTY LINE	Illuminance	Fc	0.65	5.0	0.0	N.A.	N.A.

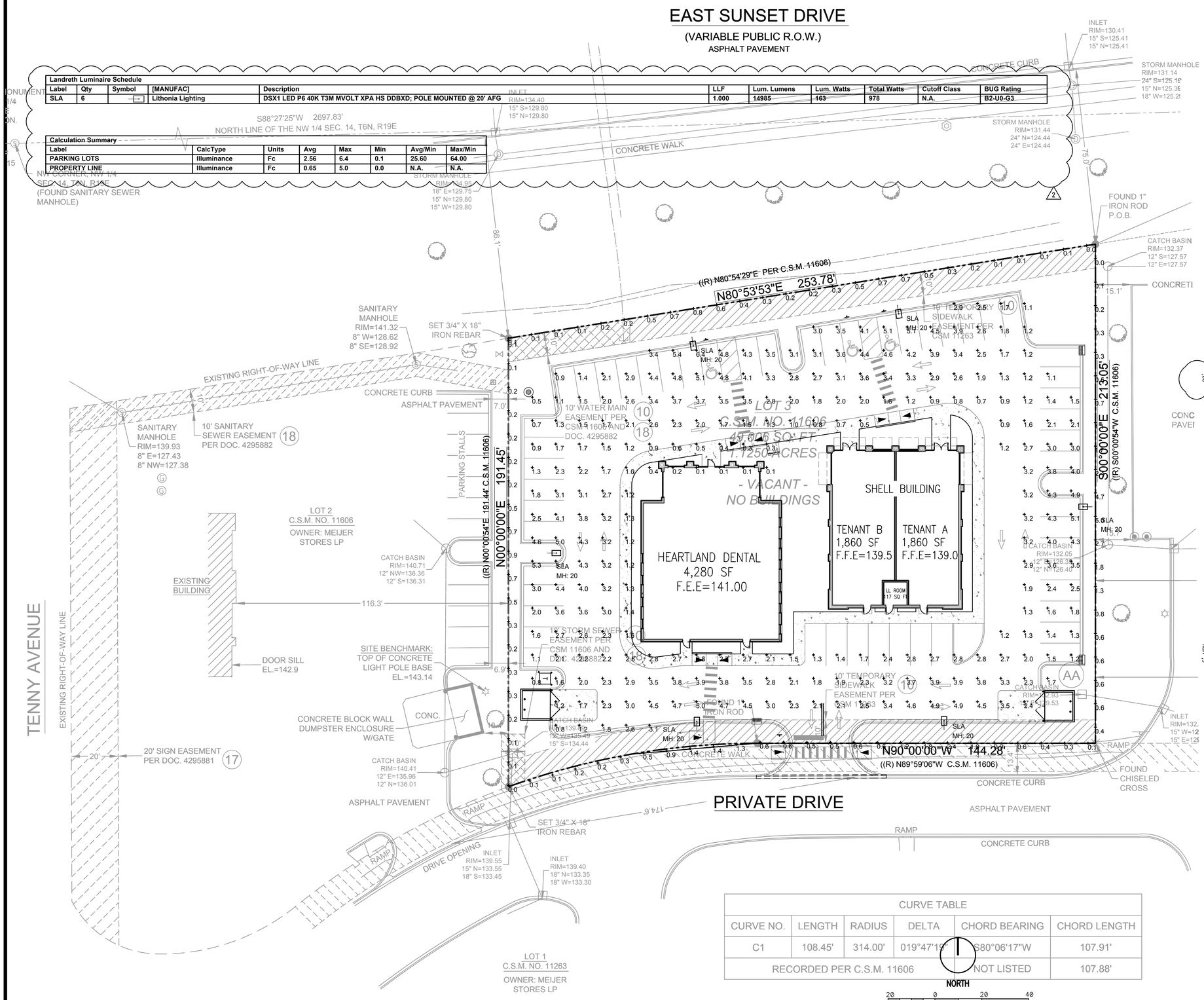

CURVE TABLE					
CURVE NO.	LENGTH	RADIUS	DELTA	CHORD BEARING	CHORD LENGTH
C1	108.45'	314.00'	019°47'19"	S80°06'17"W	107.91'
RECORDED PER C.S.M. 11606				NOT LISTED	107.88'

NORTH

GRAPHIC SCALE 20 0 20 40

SITE LIGHTING PLAN

1"=20'

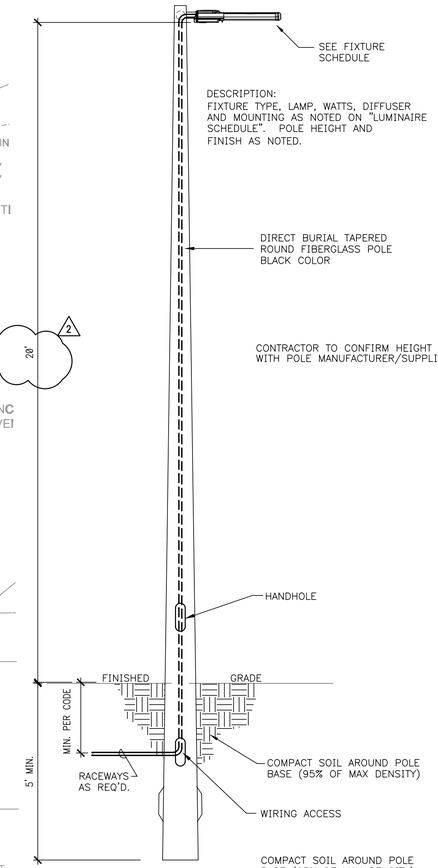

NOTES:
ALL POLE BASES TO BE INSTALLED OF 24"–36" BEHIND BACK OF CONCRETE CURB.

POLE SHALL BE CAPABLE OF WITHSTANDING 90 MPH WIND SPEED (3 SECOND GUST PER AASHTO 2009 SPEC).

1 SITE LIGHTING POLE AND BASE
NTS

INTERPLAN LLC
ARCHITECTURE
ENGINEERING
INTERIOR DESIGN
PROJECT MANAGEMENT

604 COURTLAND STREET
SUITE 100
ORLANDO, FLORIDA 32804
PH 407.645.5008
FX 407.629.9124

SEAL:

WISCONSIN STUART A. ANDERSON E-44904-6 ORLANDO, FL PROFESSIONAL ENGINEER

Digitally signed by Stuart A Anderson Date: 2018.05.22 10:05:33-04'00'

STUART ANDERSON, P.E.
WI. REG. #44904–6

NO	DATE	REMARKS
2	6–11–18	CITY COMMENTS

REVISIONS

HEARTLAND DENTAL

SUNSET DR. & TENNY AVE.
WAUKESHA, WI 53189

PROJECT NO: 2017.0582
DATE: 3-1-18

SL1
SITE LIGHTING PLAN

CHECKED: CDB DRAWN: H.M

COPYRIGHT © 2016 INTERPLAN LLC RESERVES COPYRIGHT & OTHER RIGHTS RESTRICTING THESE DOCUMENTS TO THE ORIGINAL SITE OR PURPOSE FOR WHICH THEY WERE PREPARED. REPRODUCTIONS, CHANGES OR ASSIGNMENTS ARE PROHIBITED.

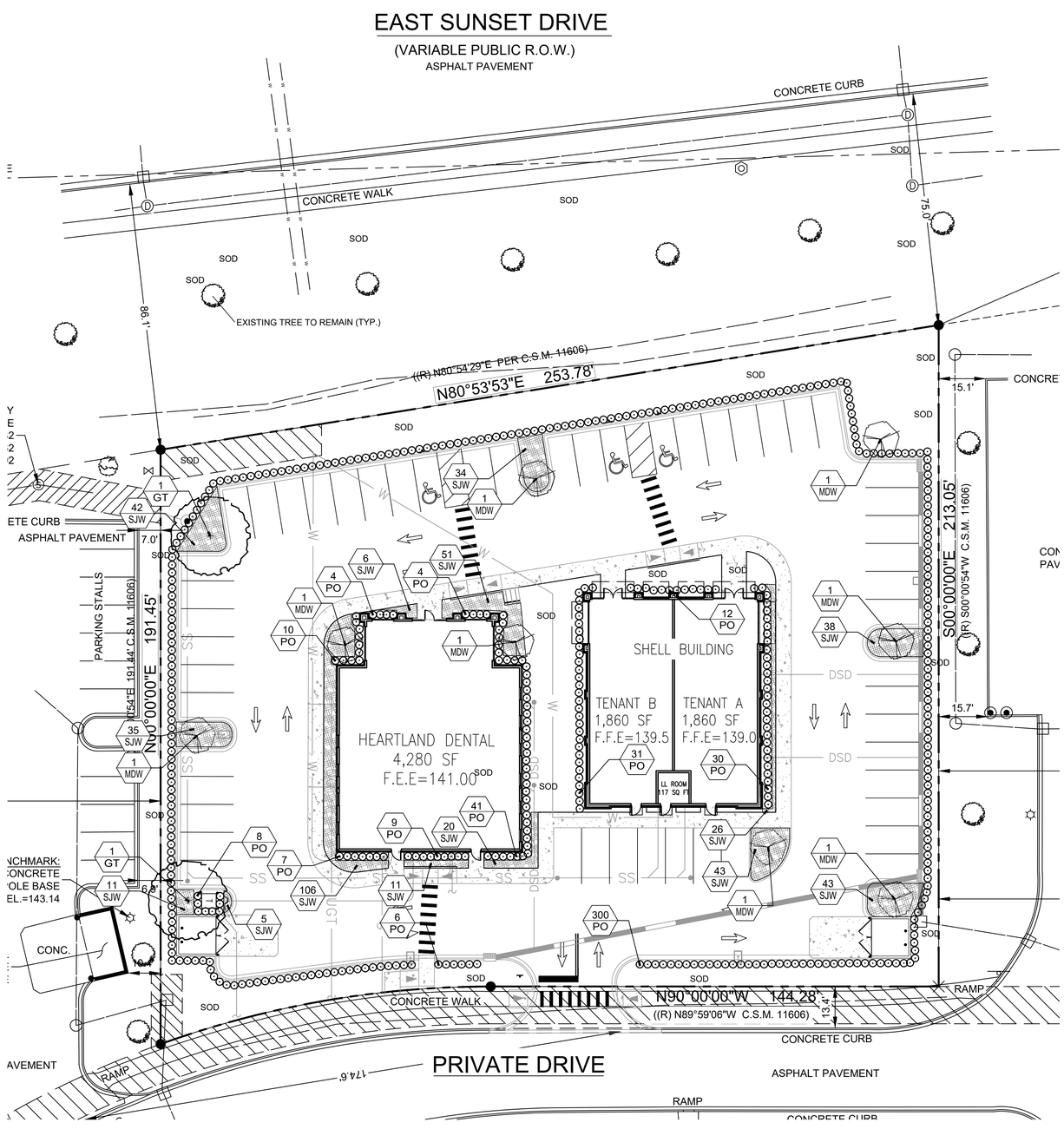

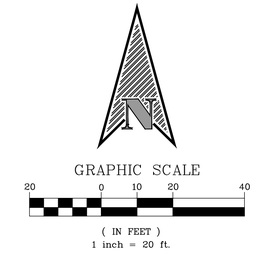

INTERPLAN LLC
ARCHITECTURE
ENGINEERING
INTERIOR DESIGN
PROJECT MANAGEMENT

AA 003420
CA 8660

604 COURTLAND STREET
SUITE 100
ORLANDO, FLORIDA 32804
PH 407.645.5008
FX 407.629.9124

SEAL:

NO	DATE	REMARKS
3	06/20/18	SHRUBS AT TRANSFORMER
2	06/12/18	REMOVED SIGN
1	05/21/18	REVISED BASE

REVISIONS

HEARTLAND DENTAL

SUNSET DR. & TENNY AVE.
WAUKESHA, WI 53189

PROJECT NO: 2017.0582
DATE: 03-23-18

L-1

LANDSCAPE PLAN

CHECKED: JB DRAWN: JB

COPYRIGHT © 2016 INTERPLAN LLC. RESERVES COPYRIGHT & OTHER RIGHTS RESTRICTING THESE DOCUMENTS TO THE ORIGINAL SITE OR PURPOSE FOR WHICH THEY WERE PREPARED. REPRODUCTIONS, CHANGES OR ASSIGNMENTS ARE PROHIBITED.

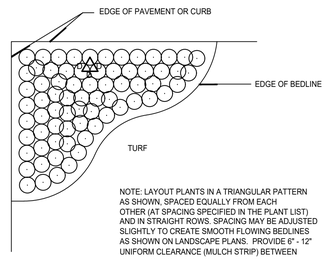

SHRUB/GROUNDCOVER SPACING DETAIL

NOT TO SCALE

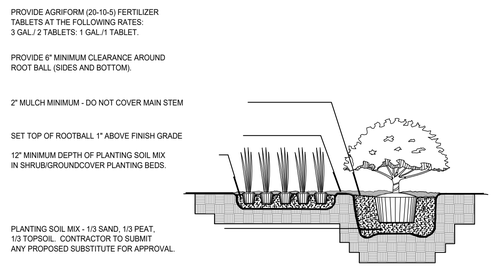

SHRUB AND GROUNDCOVER PLANTING DETAIL

NOT TO SCALE

PLANT LIST

SYMBOL	QUANTITY	BOTANICAL NAME	COMMON NAME	DESCRIPTION	REMARKS
TREES					
GT	2	GLEDITSIA TRIACANTHOS	COMMON HONEY LOCUST	2-1/2" DBH	SPACE AS SHOWN GUY
MDW	4	MALUS DONALS WYMAN	DONALD WYMAN CRABAPPLE	1.5" DBH	SPACE AS SHOWN GUY
SHRUBS					
PO	3 462	PHYSOCARPUS OPULIFOLIUS	DIABOLO NINEBARK	18" HEIGHT	30" O.C.
GROUNDCOVER					
SJW	3 471	SPIREA JAPONICA WALBUMA	MAGIC CARPET SPIREA	1 GAL CAN, FULL	24" O.C.
SOD					
	SEE PLANS	POA PRATENSIS	KENTUCKY BLUE GRASS	SOLID, FREE OF PESTS AND DISEASES	FIELD VERIFY QTY.
MULCH					
	SEE PLANS	MINI PINE BARK NUGGETS	MINI PINE BARK NUGGETS	FREE OF DIRT AND DEBRIS	FIELD VERIFY QTY.

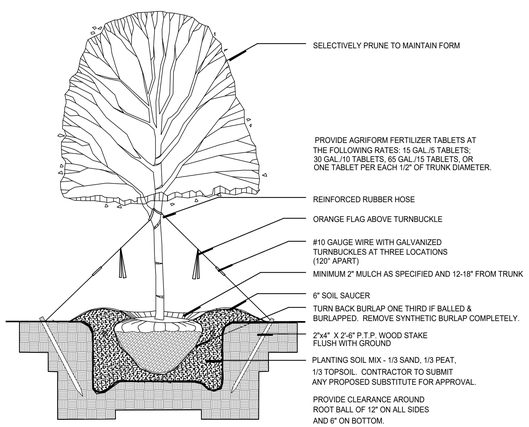

TREE PLANTING DETAIL

NOT TO SCALE

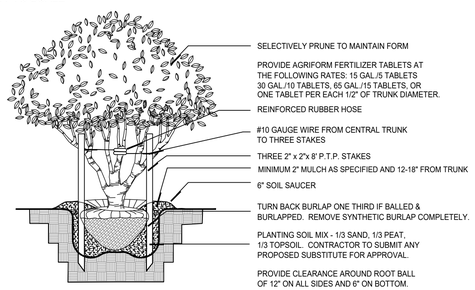

MULTI-TRUNK TREE PLANTING DETAIL

NOT TO SCALE

LANDSCAPE PLANTING NOTES:

1. ALL PLANTS MUST BE HEALTHY, VIGOROUS MATERIAL FREE OF PESTS AND DISEASES.
2. ALL PLANTS SHALL BE GRADE #1, AS GRADED IN GRADES AND STANDARDS FOR NURSERY PLANTS.
3. ALL PLANTS ARE SUBJECT TO APPROVAL BY THE LANDSCAPE ARCHITECT AND OWNER BEFORE, DURING, AND AFTER INSTALLATION.
4. ALL SINGLE-TRUNKED TREES SHALL BE STRAIGHT TRUNKED WITH ONE CENTRAL LEADER AND HAVE A FULL, DENSE CROWN.
5. ALL TREES SHALL BE STAKED AND GUYED AS SHOWN IN PLANTING DETAILS.
6. ALL MULCH PLANTING AREAS SHALL BE A MINIMUM OF 2" IN DEPTH.
7. ALL PLANTING AREAS SHALL HAVE A MINIMUM OF 3" TOPSOIL.
8. ALL TREES SHALL BE FREE OF OPEN WOUNDS AND WOUND SCARS IN THE CLEAR TRUNK AREA.
9. ANY SYNTHETIC BURLAP AND/OR WIRE BASKETS MUST BE TOTALLY REMOVED PRIOR TO INSTALLATION OF PLANT MATERIAL. IF NATURAL BURLAP IS USED, IT MAY BE TURNED DOWN 1/3 OF THE ROOTBALL.

LANDSCAPE CONTRACTOR NOTES:

1. THE LANDSCAPE CONTRACTOR IS RESPONSIBLE FOR MAINTAINING, IN FULL, ALL LANDSCAPE PLANTING AREAS, UNTIL THE JOB IS ACCEPTED IN FULL BY THE OWNER. "IN FULL" MEANS WATERING, PEST CONTROL, MULCHING, MOWING, FERTILIZING AND RESETTING TREES THAT ARE OUT OF PLUMB.
2. THE LANDSCAPE CONTRACTOR SHALL COMPLETELY GUARANTEE ALL INSTALLED PLANT MATERIAL FOR A PERIOD OF ONE CALENDAR YEAR BEGINNING ON THE DATE OF 100% COMPLETION. ANY AND ALL REQUIRED PLANT REPLACEMENTS SHALL BE MADE PROMPTLY AND AT NO ADDITIONAL COST TO THE OWNER.
3. THE LANDSCAPE CONTRACTOR SHALL STAKE THE LOCATIONS OF ALL PLANT MATERIAL AND PLANTING BED LINES FOR REVIEW BY THE LANDSCAPE ARCHITECT AND OWNER.
4. THE LANDSCAPE CONTRACTOR SHALL BE RESPONSIBLE FOR VERIFICATION OF ALL WRITTEN PLANT QUANITIES PRIOR TO INITIATION OF THE WORK. IN THE EVENT THAT THE PLANS CONTRADICT THE PLANT LIST, THE PLANS SHALL RULE.
5. THE LANDSCAPE CONTRACTOR SHALL BE FAMILIAR WITH AND ACCEPT THE EXISTING SITE CONDITIONS PRIOR TO INITIATION OF THE WORK. ANY VARIATION FROM THE SPECIFIED WORK SHALL BE THE RESPONSIBILITY OF THE LANDSCAPE CONTRACTOR.
6. THE LANDSCAPE CONTRACTOR SHALL BE RESPONSIBLE FOR LOCATING ALL UNDERGROUND UTILITIES, DRAINAGE STRUCTURES, CURBS, SIDEWALKS, AND ANY OTHER OBJECTS WHICH MIGHT BE DAMAGED DURING THE WORK.
7. THE LANDSCAPE CONTRACTOR SHALL BE RESPONSIBLE TO MAKE ANY AND ALL NECESSARY REPAIRS TO DAMAGE CAUSED BY HIS WORK AT NO ADDITIONAL COST TO THE OWNER OR LANDSCAPE ARCHITECT.
8. THE LANDSCAPE CONTRACTOR SHALL BE RESPONSIBLE FOR OBTAINING ALL NECESSARY PERMITS, AND FOLLOWING ALL APPLICABLE LOCAL CODES PERTAINING TO THE PROJECT DURING THE COURSE. OF HIS WORK.
9. CONTRACTOR TO PROVIDE IRRIGATION WITH 100% COVERAGE USING AN AUTOMATIC UNDERGROUND IRRIGATION SYSTEM WITH A RAIN SENSOR.

INTERPLAN LLC

ARCHITECTURE
ENGINEERING
INTERIOR DESIGN
PROJECT MANAGEMENT

AA 003420
CA 8660

604 COURTLAND STREET
SUITE 100
ORLANDO, FLORIDA 32804
PH 407.645.5008
FX 407.629.9124

SEAL:

NO	DATE	REMARKS
3	06/20/18	SHRUBS AT TRANSFORMER
2	06/12/18	REMOVED SIGN
1	05/21/18	REVISED BASE

REVISIONS

HEARTLAND DENTAL

SUNSET DR. & TENNY AVE.
WAUKESHA, WI 53189

PROJECT NO: 2017.0582
DATE: 03-23-18

L-2

LANDSCAPE DETAIL

CHECKED: JB DRAWN: JB

COPYRIGHT © 2016 INTERPLAN LLC. RESERVED COPYRIGHT & OTHER RIGHTS RESTRICTING THESE DOCUMENTS TO THE ORIGINAL SITE OR PURPOSE FOR WHICH THEY WERE PREPARED. REPRODUCTIONS, CHANGES OR ASSIGNMENTS ARE PROHIBITED.

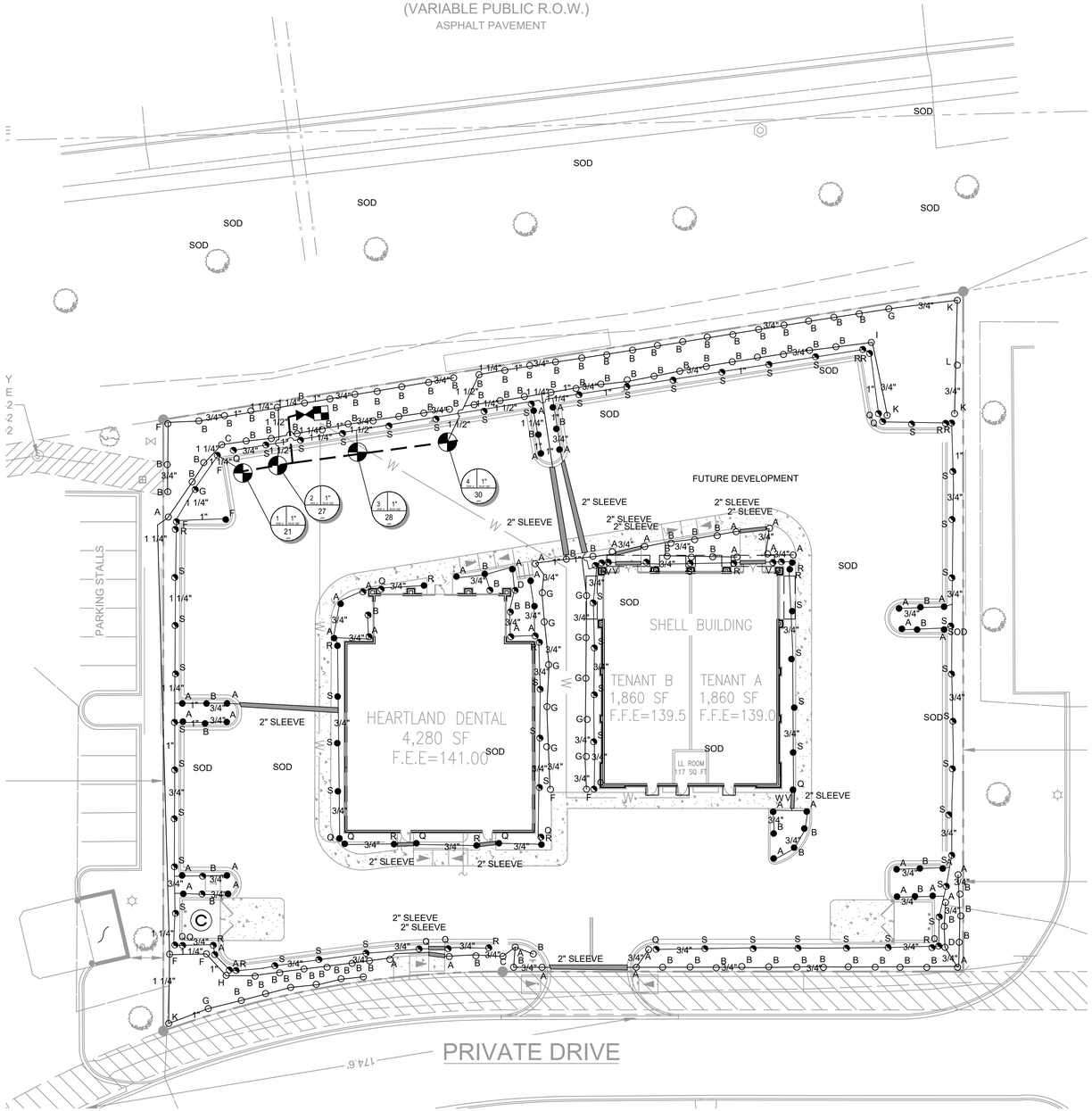

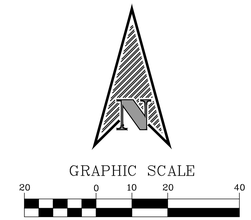

INTERPLAN LLC
ARCHITECTURE
ENGINEERING
INTERIOR DESIGN
PROJECT MANAGEMENT

AA 003420
CA 8660

604 COURTLAND STREET
SUITE 100
ORLANDO, FLORIDA 32804
PH 407.645.5008
FX 407.629.9124

SEAL:

NO	DATE	REMARKS
3	06/20/18	SHRUBS AT TRANSFORMER
2	06/12/18	REMOVED SIGN
1	05/21/18	REVISED BASE

REVISIONS

HEARTLAND DENTAL

SUNSET DR. & TENNY AVE.
WAUKESHA, WI 53189

PROJECT NO: 2017.0582
DATE: 03-23-18

L-3

IRRIGATION PLAN

CHECKED: JB DRAWN: JB

COPYRIGHT © 2016 INTERPLAN LLC. RESERVES COPYRIGHT & OTHER RIGHTS RESTRICTING THESE DOCUMENTS TO THE ORIGINAL SITE OR PURPOSE FOR WHICH THEY WERE PREPARED. REPRODUCTIONS, CHANGES OR ASSIGNMENTS ARE PROHIBITED.

IRRIGATION DETAILS

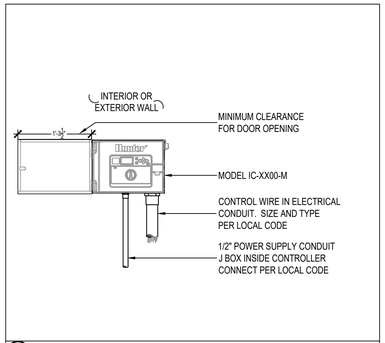

A I-CORE WALL MOUNT CONTROLLER

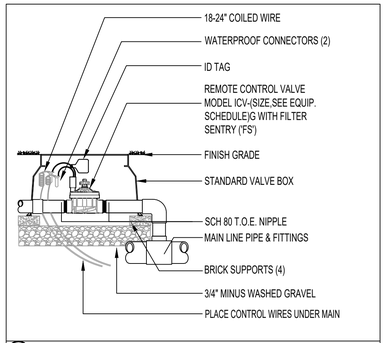

B ICV-151 OR 201 GLOBE VALVE

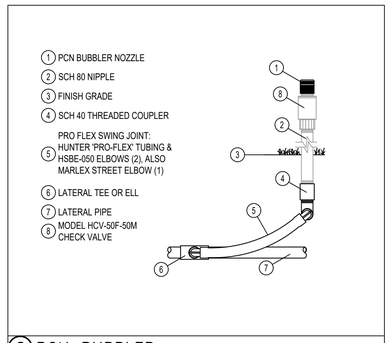

C PCN BUBBLER

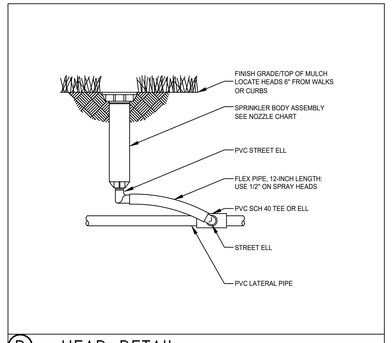

D HEAD DETAIL

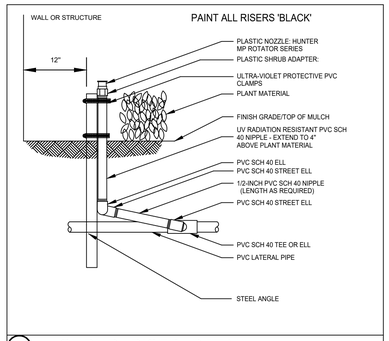

E SHRUB RISER DETAIL

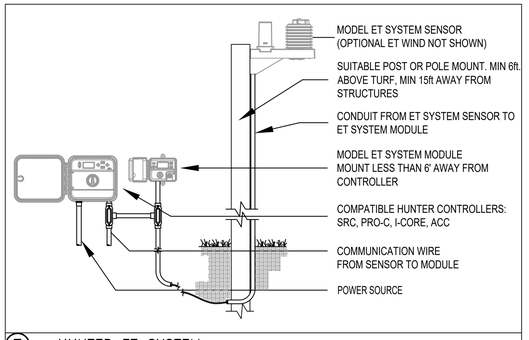

F HUNTER ET SYSTEM

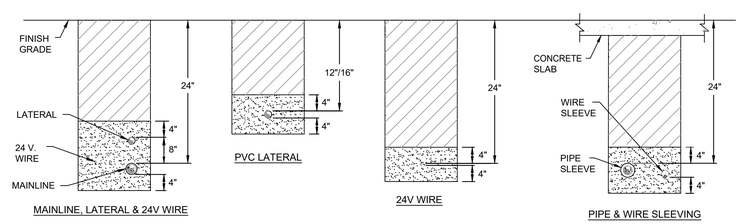

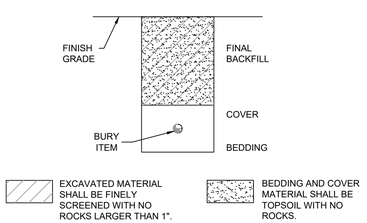

NOTES:

1. BEDDING SHALL BE PLACED AND LEVELED PRIOR TO INSTALLATION OF BURY ITEM.
2. BACKFILL SHALL BE PLACED IN MAXIMUM 6" LIFTS.
3. SLEEVE ALL PIPE AND WIRE SEPARATELY. SLEEVE 2 X DIA. OF PIPE (MIN 2"). ONE PIPE PER SLEEVE. SLEEVES TO BE PRIMED AND SOLVENT WELDED.
4. ALL PIPE TO BE INSTALLED PER MANUFACTURES SPECIFICATIONS WITH PIPE LABELING FACING UP FOR INSPECTION PURPOSES. PROVIDE A MINIMUM OF 2" CLEARANCE TO SIDE OF TRENCH AND BETWEEN PIPES.
5. ALL 120 V. WIRING SHALL BE INSTALLED IN ACCORDANCE WITH LOCAL CODE REQUIREMENTS.
6. TAPE AND BUNDLE IRRIGATION CONTROL WIRES EVERY 10'. PROVIDE LOOSE 20" LOOP AT ALL CHANGES OF DIRECTION OVER 30".
7. ALL REMOTE CONTROL VALVE WIRING NOT INSTALLED WITH MAINLINE PIPE SHALL BE INSTALLED IN A MINIMUM 2" SCHEDULE 40 GREY ELECTRICAL CONDUIT OR AS APPROVED.
8. "NON-POTABLE" WARNING TAPE TO BE INSTALLED ON ALL PRESSURIZED MAINLINES 12" ABOVE THE PIPE.
9. INSTALL ONE ADDITIONAL SLEEVE SIZED TO MATCH THE LARGEST REQUIRED SLEEVE WITH ENDS TAPED FOR FUTURE USE.
10. SLEEVES TO EXTEND A MINIMUM OF 12" PAST HARDSCAPE PLANTERS, CURBS, SIDEWALKS, ETC. SLEEVES TO BE STAGGERED/OFFSET SO THAT SLEEVE USE IS NOT OBSTRUCTED BY OTHER PIPES.
11. WHERE PRESSURE SUPPLY PIPING IS INSTALLED WITHOUT CONTROL WIRING, A 14 GA. TRACKING WIRE SHALL BE INSTALLED.

G TRENCHING DETAILS

SPRAY NOZZLE CHART

	SYM	NOZZLE	NOZZLE PATTERN	GPM
MP1000 8'-15' radius	A	MAROON	90° ADJUSTABLE ARC	.19
	B	MAROON	180° ADJUSTABLE ARC	.37
	C	LT. BLUE	210° ADJUSTABLE ARC	.43
	D	LT. BLUE	270° ADJUSTABLE ARC	.57
	E	OLIVE	360° ARC	.75
MP2000 13'-21' radius	F	BLACK	90° ADJUSTABLE ARC	.40
	G	BLACK	180° ADJUSTABLE ARC	.74
	H	GREEN	210° ADJUSTABLE ARC	.86
	I	GREEN	270° ADJUSTABLE ARC	1.10
	J	RED	360° ARC	1.47
MP3000 22'-30' radius	K	BLUE	90° ADJUSTABLE ARC	.86
	L	BLUE	180° ADJUSTABLE ARC	1.82
	M	YELLOW	210° ADJUSTABLE ARC	2.12
	N	YELLOW	270° ADJUSTABLE ARC	2.73
	O	GRAY	360° ARC	3.64
STRIPS & CORNERS	P	TURQOUISE	45°-105° ADJUSTABLE ARC	.45
	Q	IVORY	5'x15' LEFT STRIP	.22
	R	COPPER	5'x15' RIGHT STRIP	.22
	S	BROWN	5'x30' SIDE STRIP	.44
BUBBLERS AND MICRO-SPRAYS	T	PCN10	1.00 GPM FLOOD BUBBLER	1.00
	U	PCN50	.50 GPM FLOOD BUBBLER	.50
	V	SR-2Q	90° 2' RADIUS	.11
	W	SR-2H	180° 2' RADIUS	.16
	X	MS-F	360° 5' RADIUS	.50

IRRIGATION NOTES

1) REFER TO THE LANDSCAPE PLANS WHEN TRENCHING TO AVOID TREES AND SHRUBS.

2) ALL MAINLINE PIPING SHALL BE BURIED TO A MINIMUM DEPTH OF 18" OF COVER. ALL LATERAL PIPING SHALL BE BURIED TO A MINIMUM DEPTH OF 12" OF COVER.

3) ALL POP-UP ROTORS AND SPRAY HEADS SHALL BE INSTALLED USING AN 18" P.V.C. FLEX PIPE CONNECTION. DO NOT USE FUNNY PIPE.

4) ADJUST ALL NOZZLES TO REDUCE WATER WASTE ON HARD SURFACES AND BUILDING WALLS.

5) THROTTLE ALL VALVES ON SHRUB LINES AS REQUIRED TO PREVENT FOGGING.

6) ALL RISERS SHALL BE PAINTED BLACK.

7) ALL RISERS SHALL BE STAKED WITH A STEEL ANGLE AND SECURED WITH ULTRA-VIOLET LIGHT PROTECTED P.V.C. CLAMPS.

8) ALL CONTROL WIRE SPLICES SHALL BE MADE IN VALVE BOXES USING SNAP-TITE CONNECTORS AND SEALANT.

9) THE CONTRACTOR SHALL PREPARE AN AS-BUILT DRAWING ON A REPRODUCIBLE PAPER (SEPIA OR MYLAR) SHOWING ALL INSTALLED IRRIGATION. A MYLAR OR SEPIA OF THE ORIGINAL PLAN MAY BE OBTAINED FROM THE LANDSCAPE ARCHITECT FOR A FEE. THE DRAWING SHALL LOCATE ALL MAINLINE AND VALVES BY SHOWING EXACT MEASUREMENTS FROM HARD SURFACES.

10) ALL VALVES, GATE VALVES AND QUICK COUPLERS SHALL BE INSTALLED IN VALVE BOXES.

11) ANY PIPING SHOWN OUTSIDE THE PROPERTY LINE OR RUNNING OUTSIDE A LANDSCAPE AREA IS SHOWN THERE FOR CLARITY ONLY. ALL LINES SHALL BE INSTALLED ON THE PROPERTY AND INSIDE THE LANDSCAPE AREAS.

12) ALL RISERS SHALL BE INSTALLED 12" FROM ANY WALL AND A MINIMUM OF 36" FROM ANY SIDEWALK, PATIO OR ROAD.

13) THE EXACT HEIGHT OF ANY 12" POP-UP THAT IS SHOWN IN A SHRUB BED SHALL BE DETERMINED BY THE LANDSCAPE ARCHITECT IN THE FIELD.

14) THE CONTRACTOR SHALL EXERCISE CARE SO AS NOT TO DAMAGE ANY EXISTING UTILITIES. THE CONTRACTOR SHALL BE RESPONSIBLE FOR THE IMMEDIATE REPAIRS AND COST OF ANY DAMAGE CAUSED BY HIS WORK.

15) ALL WORK SHALL BE GUARANTEED FOR ONE YEAR FROM THE DATE OF FINAL ACCEPTANCE AGAINST ALL DEFECTS IN EQUIPMENT AND WORKMANSHIP.

16) CONTRACTOR TO USE MIN. OF 12 GAUGE WIRE FOR ALL COMMON WIRES AND 14 GAUGE WIRE FOR ALL CONTROL WIRES. CONTRACTOR ALSO TO PROVIDE 3 SPARE CONTROL WIRES FOR ANY FUTURE USE.

17) CONCRETE THRUST BLOCKS ARE TO BE UTULIZED AT ALL MAINLINE DIRECTION CHANGES.

18) ALL IRRIGATION SHOWN ON PLANS IS SCHEMATIC AND DOES NOT REFLECT ALL FITTINGS AND APPURTENANCES WHICH SHALL BE INCLUDED TO PROVIDE A FULLY FUNCTIONAL IRRIGATION SYSTEM CAPABLE OF PROVIDING 100 PERCENT COVERAGE WITH A 50 PERCENT OVERLAP.

EQUIPMENT LIST

SYMBOL	DESCRIPTION	QUANTITY
■	0.50 GPM BUBBLER (2 PER TREE)	0
○	6" POP-UP SPRAY - HUNTER INDUSTRIES MPR40 W/MP2000 NOZZELS	136
●	12" POP-UP SPRAY - HUNTER INDUSTRIES MPR40 W/MP2000 NOZZELS	69
◔	SPRAY ON RISER - HUNTER INDUSTRIES INST-00-CV-MP2000	91
▲	HUNTER INDUSTRIES - 4" POP-UP PGP ROTORS- PART RADIUS	0
◮	HUNTER INDUSTRIES - 4" POP-UP PGP ROTORS- FULL RADIUS	0
◐	HUNTER 'ICV' SERIES ELECTRIC VALVE WITH ACCU-SET PRESSURE REGULATOR 1"	4
◐	HUNTER 'ICV' SERIES ELECTRIC VALVE WITH ACCU-SET PRESSURE REGULATOR 3/4"	0
Ⓒ	HUNTER ICC 8 STATION CONTROLLER, 120VOLT INSTALL WITH A ET SENSOR AND BY-PASS BOX. GROUND WITH AN 8' COPPER CLAD ROD.	1
▚	1" POTABLE IRRIGATION METER TO PROVIDE 30 GPM AT 40 PSI	1
⋈	1" DOUBLE CHECK VALVE BACKFLOW PREVENTOR	1
——	LATERAL LINE SIZE PER PLAN	SEE PLAN
- - - - -	1-1/2" MAINLINE CLASS 200 P.V.C. SIZE PER PLAN	SEE PLAN
▭	SLEEVING - SCH. 40 P.V.C. MIN. DEPTH OF 24" (ALL 3" SLEEVES TO HAVE ACCOMPANYING 2" SLEEVE FOR WIRES)	SEE PLAN

INTERPLAN LLC

ARCHITECTURE
ENGINEERING
INTERIOR DESIGN
PROJECT MANAGEMENT

AA 003420
CA 8660

604 COURTLAND STREET
SUITE 100
ORLANDO, FLORIDA 32804
PH 407.645.5008
FX 407.629.9124

SEAL:

NO	DATE	REMARKS
3	06/20/18	SHRUBS AT TRANSFORMER
2	06/12/18	REMOVED SIGN
1	05/21/18	REVISED BASE

REVISIONS

HEARTLAND DENTAL

SUNSET DR. & TENNY AVE.
WAUKESHA, WI 53189

PROJECT NO: 2017.0582
DATE: 03-23-18

L-4

IRRIGATION DETAIL

CHECKED: JB DRAWN: JB

COPYRIGHT © 2016 INTERPLAN LLC. RESERVES COPYRIGHT & OTHER RIGHTS RESTRICTING THESE DOCUMENTS TO THE ORIGINAL SITE OR PURPOSE FOR WHICH THEY WERE PREPARED. REPRODUCTIONS, CHANGES OR ASSIGNMENTS ARE PROHIBITED.

THESE PLANS AND DESIGNS ARE COPYRIGHT PROTECTED AND MAY NOT BE USED IN WHOLE OR IN PART WITHOUT THE WRITTEN CONSENT OF PINNACLE ENGINEERING GROUP, LLC

LEGAL DESCRIPTION:

AS DESCRIBED IN CHICAGO TITLE INSURANCE COMPANY - FIDELITY NATIONAL TITLE INSURANCE COMPANY ORDER NUMBER CO-7016 NCS-MI-FILE NO. 17-111319 WITH AN EFFECTIVE DATE OF NOVEMBER 21, 2017 - REVISION A.

Lot 3 of Certified Survey Map No. 11606, recorded August 23, 2017 in Book 116 of Certified Survey Maps on Pages 94-97, as Document No. 4295767, being a division of Lots 2 and 3 in Certified Survey Map No. 11263, being a division of part of the Northeast 1/4 and Southeast 1/4 of the Northwest 1/4 of Section 14, Township 6 North, Range 19 East, in the City of Waukesha, County of Waukesha, State of Wisconsin.

Tax Key No: WAKC 1350.256 (Lot 3) and part of WAKC 1350.255 (Lot 2)
Address: Situated on E. Sunset Drive

TABLE A

1. Monuments placed at the corners of the boundary of the property.
2. Address (as disclosed in title commitment): E. Sunset Drive.
3. Flood Zone Classification: The property lies with in Zone "X" of the Flood Insurance Rate Map Community Panel No. 55133C0326G dated NOVEMBER 5, 2014. Zone "X" areas are determined to be outside the 0.2% annual chance floodplain.
4. Land Area: 49,006 Square Feet (1.1250 Acres).
5. Vertical Datum: City of Waukesha (City of Waukesha Vertical Datum conversion = National Geodetic Vertical Datum of 1929 minus (-) 780.55). Contours are shown at a 1' interval based on actual ground survey of the current ground terrain. Reference Benchmark: Concrete monument with brass cap at the northeast corner of the Northwest 1/4 Section 14, Town 6 North, Range 19 East, Elevation = 898.64 NGVD29 = 118.09 CITY.
6. Letter / Zoning Report not supplied by client at time of survey.
7. The subject property is vacant - No Buildings.
8. Substantial features observed in the process of conducting the field work graphically shown on survey.
9. There are no designated parking spaces on the subject property.
11. Underground utility locations shown are based on field location markings by Digger's Hotline ticket #20174904724 with a clear date of DECEMBER 11, 2017. The location and size of underground structures and utilities shown hereon have been located based on a reasonable visual observation and are shown for informational purposes only. PINNACLE ENGINEERING GROUP, LLC. does not guarantee the location of utilities shown. Contact Digger's Hotline prior to the start of any activity.
13. Names of adjoining owners according to current public records: Shown on Survey.
14. The subject property is located 190 feet east of the intersection of East Sunset Drive and Tenny Avenue.
16. No evidence of recent earth moving work, building construction or building additions observed in the process of conducting the fieldwork.
17. No evidence of changes in street right of way lines and street or sidewalk construction or repairs observed in the process of conducting the fieldwork.
18. No wetlands were delineated or observed in the process of conducting the fieldwork.
19. Offsite easements as disclosed in the tile are graphically shown on Survey.
20. Certificate of Professional Liability Insurance furnished upon request and in effect throughout the contract term.
21. Additional Items requested by the client: Location and type of any trees of significant note, 4" in diameter (at DBH) or greater. At the time of the survey, there were no trees on the subject property.

CERTIFICATION

To: Meijer Stores Limited Partnership, a Michigan limited partnership or their designee; Chicago Title Company; Fidelity National Title Insurance Company:

This is to certify that this map or plat and the survey on which it is based were made in accordance with the 2016 Minimum Standard Detail Requirements for ALTA/NSPS LAND TITLE SURVEYS, jointly established and adopted by ALTA and NSPS, and includes items 1, 2, 3, 4, 5, 6(b), 7(a), 7(b)(1), 8, 9, 11, 13, 14, 16, 17, 18, 19, 20 and 21 of Table A thereof. The fieldwork was completed on DECEMBER 14, 2017 and JANUARY 4, 2018.

John P. Konopacki, PLS
License No. S-2461

Date of Plat or Map: JANUARY 29, 2018

WISCONSIN JOHN P. KONOPACKI S-2461 Waukesha, WI LAND SURVEYOR

PINNACLE ENGINEERING GROUP, LLC.
15850 West Bluemound Road Suite 210
Brookfield, WI 53005
Phone: 262-754-8888
Fax: 262-754-8850

LEGEND OF SYMBOLS & ABBREVIATIONS

SANITARY MANHOLE
STORM MANHOLE
STORM INLET
CLEANOUT
CATCH BASIN
FORCE MAIN VALVE
UNKNOWN MANHOLE
WELL
HYDRANT
WATER VALVE
DOWN SPOUT
SPRINKLER VALVE
WATER SHUT OFF
STANDPIPE
WATER MANHOLE
FLOOD LIGHT
LIGHT POLE
TRAFFIC SIGNAL
UTILITY POLE
GUY WIRE

SANITARY SEWER
STORM SEWER
W — WATER MAIN
FO — FIBER OPTIC LINE
T — TELEPHONE LINE
E — ELECTRIC LINE
OHW — OVERHEAD WIRES
CATV — CABLE TELEVISION
G — GAS MAIN
WET — WETLANDS
TREE LINE
NO ACCESS

FIBER OPTIC MARKER
FIBER OPTIC MANHOLE
TELEPHONE PEDESTAL
TELEPHONE MANHOLE
TELEPHONE MARKER
TRANSFORMER
ELECTRIC METER
ELECTRIC MANHOLE
CABLE TV RISER/BOX
CABLE TV MANHOLE
GAS VALVE
GAS METER
GAS MARKER
AIR CONDITIONING UNIT
VENT
DIRECTIONAL ARROW
DUMPSTER
HANDICAP STALL
SPOT ELEVATION
GREASE TRAP

SIGN
MAIL BOX
FLAG POLE
BASKETBALL HOOP
BOLLARD
CROSS CUT
IRON PIPE
IRON REBAR/ROD
MAG NAIL
SECTION MONUMENT
SOIL BORINGS
CONIFER TREE
DECIDUOUS TREE
BUSH
WETLAND SYMBOL

CL.	=CENTERLINE
CONC.	=CONCRETE
EL.	=ELEVATION
EXT.	=EXISTING
INV.	=INVERT
MON.	=MONUMENT
P.O.B.	=POINT OF BEGINNING
P.O.C.	=POINT OF COMMENCEMENT
R.O.W	=RIGHT OF WAY
SEC.	=SECTION
SQ. FT.	=SQUARE FEET
W/	=WITH
(R)	=RECORDED AS
(D)	=DEEDED AS

VICINITY MAP

SCALE 1":1000'

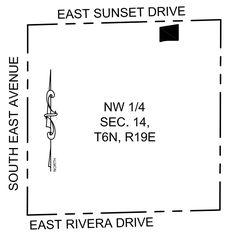

GENERAL NOTES

1. Right of Way widths and locations are based on Certified Survey Map No. 11263.
2. Existing vehicular access to this subject property is via unassigned private drive.
3. At the time of this survey the subject property contained snow covered ground conditions. Pinnacle Engineering Group, LLC takes no responsibility for any improvements that can not be located based on a reasonable visual observation.

NOTES CORRESPONDING TO SCHEDULE B - II

1 - 4, 9 & 19 - 20 NOT SURVEY RELATED
5 - 8 VISIBLE EVIDENCE SHOWN IF ANY

10. Recitals as shown on Certified Survey Map No. 11263 recorded on December 23, 2014, as Document No. 4116220, and on Certified Survey Map No. 11606 recorded on August 23, 2017, as Document No. 4295767, which among other things recites utility restrictions and temporary 10' wide sidewalk slope easement. Temporary 10' Sidewalk Slope Easement, 10' Storm Sewer Easement and 10' Water Main Easement graphically shown on survey. Affidavit of Correction recorded May 8, 2017 as Document No. 4275860. Corrections to "Notes" and 30' Water Main Easement - does not affect subject property.
11. Annexation recorded July 3, 2013 as Document No. 4025639. Annexation of land from the Town of Waukesha to the City of Waukesha. Affects subject property but cannot be plotted.
12. Easements, restrictions, limitations and all other terms, conditions, covenants and provisions as set forth in Easement and Operation Agreement recorded December 23, 2014 as Document No. 4116493. Agreement affects subject property but cannot be plotted.
13. Easements, restrictions, limitations and all other terms, conditions, covenants and provisions of Site Development Agreement as disclosed by Memorandum of Agreement recorded December 23, 2014 as Document No. 4116494. Agreement affects subject property but cannot be plotted.
14. Easements, restrictions, limitations and all other terms, conditions, covenants and provisions as set forth in Commercial Planned Unit Development Agreement recorded January 2, 2015 as Document No. 4117441, as amended by Amendment 1 - Meijer PUD Agreement recorded July 23, 2015 as Document No. 4156086. Agreements affect subject property but cannot be plotted.
15. Easements, restrictions, limitations and all other terms, conditions, covenants and provisions as set forth in Developer's Agreement for Meijer's Store at Tenny Avenue and Sunset Drive recorded February 24, 2015 as Document No. 4125900, as amended by Amendment No. 1 to Developer's Agreement for Meijer's Store at Tenny Avenue and Sunset Drive recorded February 29, 2016 as Document No. 4193493. Agreements affect subject property but cannot be plotted.
16. Easement(s) for the purpose(s) and rights incidental thereto, as granted in a document, granted to Wisconsin Electric Power Company, a Wisconsin corporation doing business as We Energies, for utility purposes, recorded on June 6, 2016, as Document No. 4210449. 12' Wisconsin Electric Power Company Easement does not affect subject property as graphically shown on survey.
17. Nonexclusive Sign Easement Agreement by and between Meijer Stores Limited Partnership, a Michigan partnership and CFT NV Developments, LLC, a Nevada limited liability company, dated July 27, 2017, recorded August 23, 2017 as Document No. 4295881. Shared 20' Sign Easement for the benefit of the subject property located on Lot 2 of Certified Survey Map No. 11606 as graphically shown on survey.
18. Reciprocal Utility Easement Agreement by and between Meijer Stores Limited Partnership, a Michigan limited partnership and CFT NV Developments, LLC, a Nevada limited liability company, dated July 27, 2017, recorded August 23, 2017 as Document No. 4295882. Reciprocal Water Main Easement, Sanitary Sewer Easement and Storm Sewer Easement as graphically shown on survey.

NORTH

GRAPHICAL SCALE (FEET)
0 — 1" = 30' — 60'

Bearings referenced to the Wisconsin State Plane Coordinate System, South Zone (NAD. 1927) which is also the bearing basis of CERTIFIED SURVEY MAP NO. 11263. The north line of the Northwest 1/4 of Section 14, Township 6 North, Range 19 East has a bearing of S88°27'25"W. The bearing basis of Certified Survey Map No. 11606 references an assumed bearing along the north line of the subject propery.

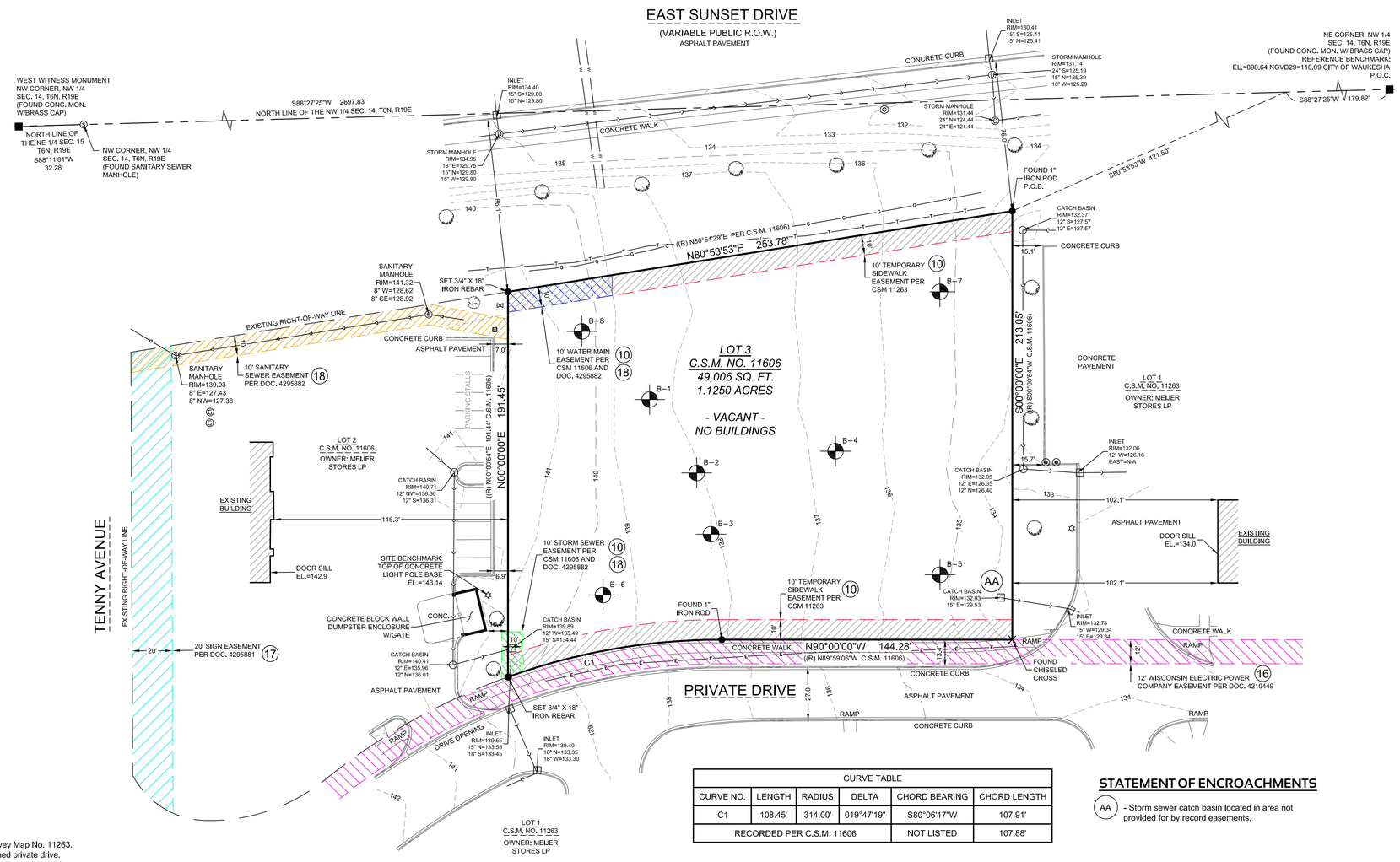

CURVE TABLE					
CURVE NO.	LENGTH	RADIUS	DELTA	CHORD BEARING	CHORD LENGTH
C1	108.45'	314.00'	019°47'19"	S80°06'17"W	107.91'
RECORDED PER C.S.M. 11606				NOT LISTED	107.88'

STATEMENT OF ENCROACHMENTS

(AA) - Storm sewer catch basin located in area not provided for by record easements.

www.pinnacle-engr.com

REVIEWED: JPK
DESIGNED:
DRAFTED: ST

PLAN | DESIGN | DELIVER
www.pinnacle-engr.com
PINNACLE ENGINEERING GROUP
ENGINEERING | NATURAL RESOURCES | SURVEYING
CHICAGO | MILWAUKEE | NATIONWIDE

WISCONSIN OFFICE:
15850 W. BLUEMOUND ROAD
BROOKFIELD, WI 53005
(262) 754-8888

LOCATION: EAST SUNSET DRIVE

LOT 3, C.S.M. NO. 11606, PART OF THE NE 1/4 OF THE NW 1/4, SEC. 14, T6N, R19E, CITY OF WAUKESHA, WAUKESHA COUNTY, WISCONSIN

ALTA/NSPS LAND TITLE SURVEY

REVISIONS

PEG JOB No. 1171.00
PEG PM
DATE 01/29/18
SCALE 1"=30'

SHEET 1 OF 1

SURVEY

© COPYRIGHT 2017