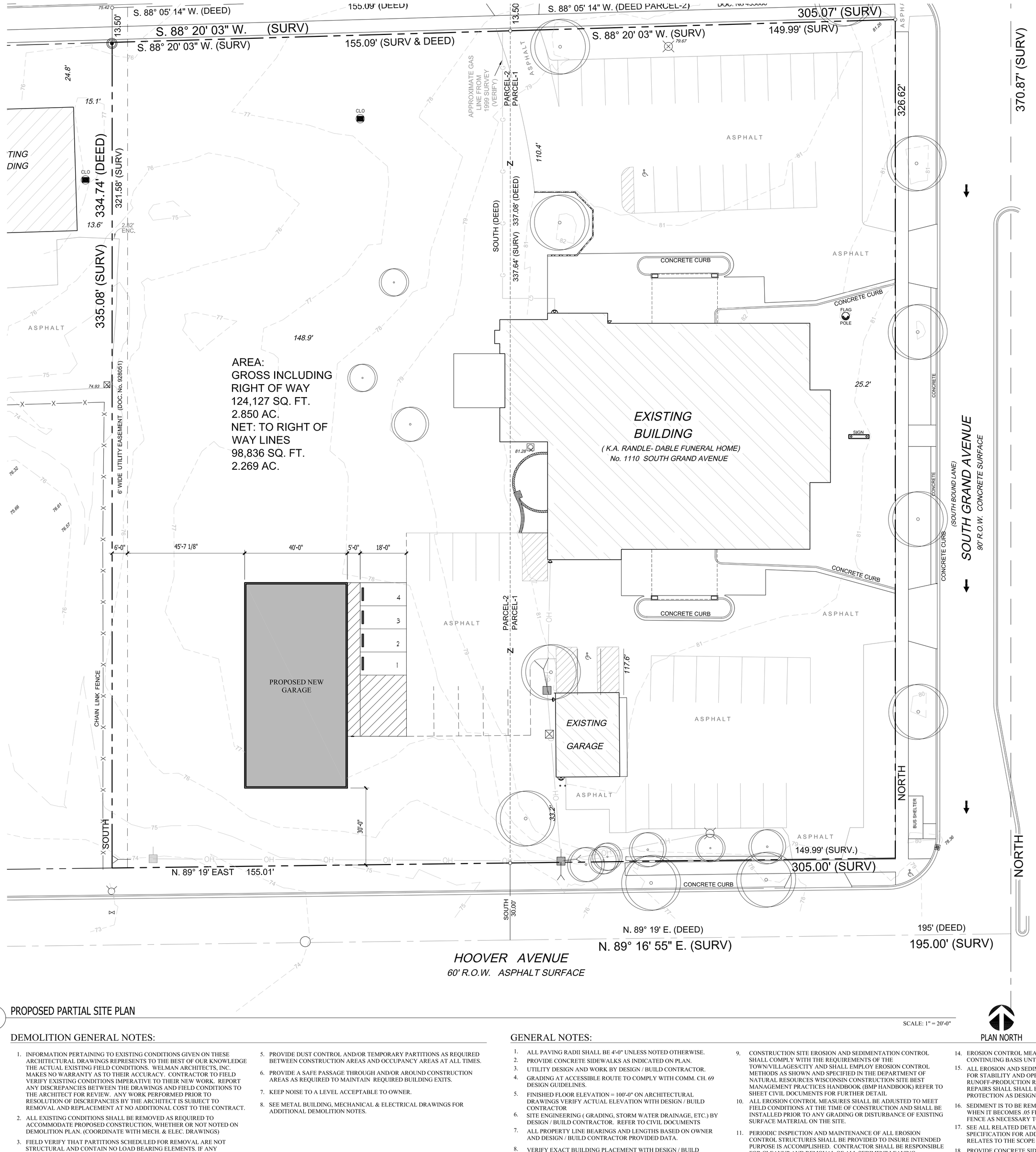

1 PROPOSED PARTIAL SITE PLAN

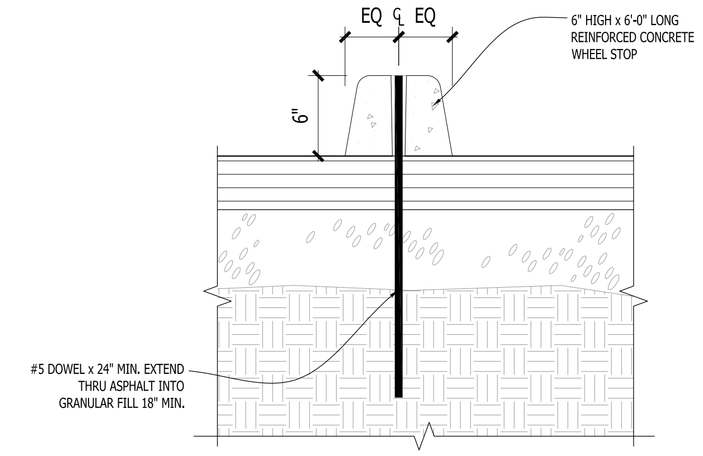

2 CONCRETE WHEEL STOP DETAIL
(REFER TO SHEET C1.1 FOR LOCATIONS)
SCALE: 1 1/2" = 1'-0"

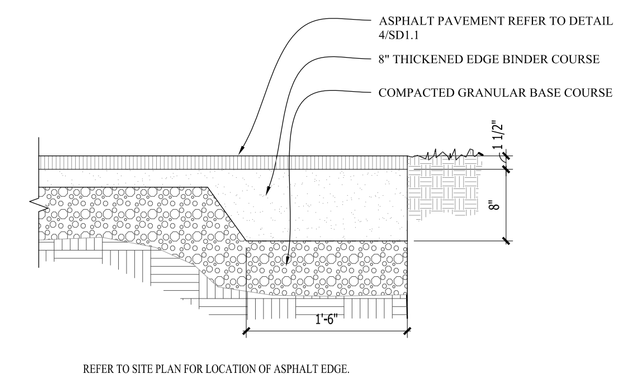

3 ASPHALT EDGE DETAIL
SCALE: 1" = 1'-0"

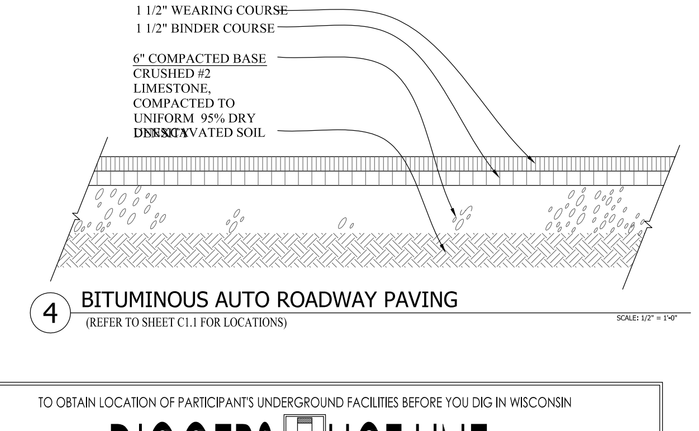

4 BITUMINOUS AUTO ROADWAY PAVING
(REFER TO SHEET C1.1 FOR LOCATIONS)
SCALE: 1/2" = 1'-0"

TO OBTAIN LOCATION OF PARTICIPANT'S UNDERGROUND FACILITIES BEFORE YOU DIG IN WISCONSIN

DIGGERS HOT LINE

WISCONSIN STATUTE 182.0175 (1974) REQUIRES A MINIMUM OF 3 DAYS NOTICE BEFORE YOU EXCAVATE (NOT INCLUDING SATURDAY, SUNDAY OR LEGAL HOLIDAYS)

UNDERGROUND SEWER AND UTILITY INFORMATION AS SHOWN IS OBTAINED FROM THE RECORDS OF MUNICIPALITY AND LOCAL UTILITY COMPANIES. THE ACCURACY OF WHICH CAN NOT BE GUARANTEED OR CERTIFIED TO.
THE LOCATIONS OF EXISTING UTILITY INSTALLATIONS AS SHOWN ON THIS SURVEY ARE APPROXIMATE. THERE MAY BE OTHER UNDERGROUND UTILITY INSTALLATIONS WITHIN THE PROJECT AREA THAT ARE NOT SHOWN.

TO OBTAIN LOCATION OF PARTICIPANT'S UNDERGROUND FACILITIES BEFORE YOU DIG IN WISCONIN CALL THE MILWAUKEE UTILITY ALERT NETWORK
(800)-242-8511, (262) 432-7910
(877) 500-9592
www.Diggershotline.com
OR

811 Know what's below. Call before you dig.

DEMOLITION GENERAL NOTES:

1. INFORMATION PERTAINING TO EXISTING CONDITIONS GIVEN ON THESE ARCHITECTURAL DRAWINGS REPRESENTS TO THE BEST OF OUR KNOWLEDGE THE ACTUAL EXISTING FIELD CONDITIONS. WELMAN ARCHITECTS, INC. MAKES NO WARRANTY AS TO THEIR ACCURACY. CONTRACTOR TO FIELD VERIFY EXISTING CONDITIONS IMPERATIVE TO THEIR NEW WORK. REPORT ANY DISCREPANCIES BETWEEN THE DRAWINGS AND FIELD CONDITIONS TO THE ARCHITECT FOR REVIEW. ANY WORK PERFORMED PRIOR TO RESOLUTION OF DISCREPANCIES BY THE ARCHITECT IS SUBJECT TO REMOVAL AND REPLACEMENT AT NO ADDITIONAL COST TO THE CONTRACT.
2. ALL EXISTING CONDITIONS SHALL BE REMOVED AS REQUIRED TO ACCOMMODATE PROPOSED CONSTRUCTION, WHETHER OR NOT NOTED ON DEMOLITION PLAN. (COORDINATE WITH MECH. & ELEC. DRAWINGS)
3. FIELD VERIFY THAT PARTITIONS SCHEDULED FOR REMOVAL ARE NOT STRUCTURAL AND CONTAIN NO LOAD BEARING ELEMENTS. IF ANY CONFLICTS OCCUR, CONTACT THE PROJECT ARCHITECT IMMEDIATELY.
4. SURFACES ADJACENT TO REMOVAL AREAS SHALL BE PATCHED AND CLEANED. MAINTAIN ALL FIRE RATINGS AS REQUIRED. NEW CONSTRUCTION TO MATCH EXISTING ADJACENT FINISHES (UNLESS NOTED OTHERWISE).
5. PROVIDE DUST CONTROL AND/OR TEMPORARY PARTITIONS AS REQUIRED BETWEEN CONSTRUCTION AREAS AND OCCUPANCY AREAS AT ALL TIMES.
6. PROVIDE A SAFE PASSAGE THROUGH AND/OR AROUND CONSTRUCTION AREAS AS REQUIRED TO MAINTAIN REQUIRED BUILDING EXITS.
7. KEEP NOISE TO A LEVEL ACCEPTABLE TO OWNER.
8. SEE METAL BUILDING, MECHANICAL & ELECTRICAL DRAWINGS FOR ADDITIONAL DEMOLITION NOTES.

GENERAL NOTES:

1. ALL PAVING RADII SHALL BE 4'-0" UNLESS NOTED OTHERWISE.
2. PROVIDE CONCRETE SIDEWALKS AS INDICATED ON PLAN.
3. UTILITY DESIGN AND WORK BY DESIGN / BUILD CONTRACTOR.
4. GRADING AT ACCESSIBLE ROUTE TO COMPLY WITH COMM. CH. 69 DESIGN GUIDELINES.
5. FINISHED FLOOR ELEVATION = 100'-0" ON ARCHITECTURAL DRAWINGS VERIFY ACTUAL ELEVATION WITH DESIGN / BUILD CONTRACTOR
6. SITE ENGINEERING (GRADING, STORM WATER DRAINAGE, ETC.) BY DESIGN / BUILD CONTRACTOR. REFER TO CIVIL DOCUMENTS
7. ALL PROPERTY LINE BEARINGS AND LENGTHS BASED ON OWNER AND DESIGN / BUILD CONTRACTOR PROVIDED DATA.
8. VERIFY EXACT BUILDING PLACEMENT WITH DESIGN / BUILD CONTRACTOR PROVIDED CIVIL ENGINEERING INFORMATION.
9. CONSTRUCTION SITE EROSION AND SEDIMENTATION CONTROL SHALL COMPLY WITH THE REQUIREMENTS OF THE TOWN/VILLAGES/CITY AND SHALL EMPLOY EROSION CONTROL METHODS AS SHOWN AND SPECIFIED IN THE DEPARTMENT OF NATURAL RESOURCES WISCONSIN CONSTRUCTION SITE BEST MANAGEMENT PRACTICES HANDBOOK (BMP HANDBOOK) REFER TO SHEET CIVIL DOCUMENTS FOR FURTHER DETAIL
10. ALL EROSION CONTROL MEASURES SHALL BE ADJUSTED TO MEET FIELD CONDITIONS AT THE TIME OF CONSTRUCTION AND SHALL BE INSTALLED PRIOR TO ANY GRADING OR DISTURBANCE OF EXISTING SURFACE MATERIAL ON THE SITE.
11. PERIODIC INSPECTION AND MAINTENANCE OF ALL EROSION CONTROL STRUCTURES SHALL BE PROVIDED TO INSURE INTENDED PURPOSE IS ACCOMPLISHED. CONTRACTOR SHALL BE RESPONSIBLE FOR CLEANUP AND REMOVAL OF ALL SEDIMENT LEAVING PROPERTY. EROSION CONTROL MEASURES SHALL BE IN WORKING CONDITION AT END OF EACH WORK DAY.
13. SILT FENCE SHALL BE INSTALLED IN ALL LOCATIONS WHERE POTENTIAL RUNOFF AND CONTAMINATION MAY OCCUR.
14. EROSION CONTROL MEASURES SHALL BE MAINTAINED ON A CONTINUING BASIS UNTIL SITE IS FULLY STABILIZED.
15. ALL EROSION AND SEDIMENT CONTROL PRACTICES TO BE CHECKED FOR STABILITY AND OPERATION FOLLOWING EVERY RUNOFF-PRODUCTION RAINFALL EVENT. ANY NEEDED REPAIRS REPAIRS SHALL SHALL BE MADE IMMEDIATELY TO MAINTAIN ALL PROTECTION AS DESIGNED.
16. SEDIMENT IS TO BE REMOVED FROM BEHIND THE SEDIMENT FENCE WHEN IT BECOMES .05 FEET DEEP AT THE FENCE. REPAIR THE FENCE AS NECESSARY TO MAINTAIN BARRIER.
17. SEE ALL RELATED DETAILS AND REMAINING SHEETS SPECIFICATION FOR ADDITIONAL INFORMATION AND HOW IT RELATES TO THE SCOPE OF THE PROJECT.
18. PROVIDE CONCRETE SIDEWALKS AS INDICATED ON PLANS. REFER TO DETAILS FOR ADDITIONAL INFORMATION.
19. ADDITIONAL GRADING OF GRASSED OR LANDSCAPED AREAS MAY BE REQUIRED DUE TO THE PLUMBING, SANITARY OR OTHER UNDERGROUND UTILITY WORK - REVIEW DOCUMENTS IN THEIR ENTIRETY TO DETERMINE FULL SCOPE OF WORK.

CONSTRUCTION SCHEDULE:

1. OBTAIN PLAN APPROVAL AND OTHER APPLICABLE PERMITS.
2. FLAG THE WORK LIMIT & BUFFER AREA FOR PROTECTION.
3. INSTALL SILT FENCE.
4. INSTALL CONSTRUCTION EXIT.
5. ROUGH GRADE SITE.
6. FINAL GRADING OF SLOPES, TOPSOIL, CRITICAL SLOPES.
7. INSTALL BASE COURSE OF ASPHALT PAVEMENT.
8. AFTER SITE IS STABILIZED, REMOVE ALL TEMPORARY MEASURES AND VEGETATE AND MULCH ALL DISTURBED AREAS.

Keller Architectural Design, LLC.

Project:
RANDLE DABLE BRISK FUNERAL HOME
Hoover Avenue
Waukesha, WI

Owner:
RANDLE DABLE BRISK FUNERAL HOME
Hoover Avenue
Waukesha, WI

COPYRIGHT *Keller Architectural Design, LLC.* 2012
ALL RIGHTS RESERVED
THIS DRAWING IS NOT TO BE REPRODUCED, CHANGED, COPIED OR ASSIGNED TO ANY THIRD PARTY IN ANY FORM OR MANNER WITHOUT FIRST OBTAINING THE EXPRESSED WRITTEN PERMISSION OF *Keller Architectural Design, LLC.* THE CLIENT AGREES TO INDEMNIFY AND HOLD THE ARCHITECT HARMLESS FROM ANY DAMAGES, LIABILITY, OR COST, INCLUDING ATTORNEY'S FEES AND COSTS OF DEFENSE ARISING FROM ANY CHANGES OR ALTERATIONS MADE BY ANYONE OTHER THAN THE ARCHITECT, OR FROM ANY REUSE OF THE DRAWINGS OR DATA WITHOUT THE PRIOR WRITTEN CONSENT OF THE ARCHITECT.

Revisions:

Date	Number	Description

Sheet Title:
Site Plan
and General Notes

Project No.: 14.11

Date: 10/13/2014

Sheet No.:

SD1.1

NOT FOR CONSTRUCTION - PRELIMINARY - FOR ESTIMATING AND REVIEW ONLY- DO NOT SCALE THESE DRAWINGS-