ASPEN OVERLOOK

SITE DEVELOPMENT PLANS

WAUKESHA, **WISCONSIN**

GENERAL NOTES

1. THE LATEST EDITIONS OF THE FOLLOWING DOCUMENTS AND ANY SUPPLEMENTS THERETO, SHALL GOVERN ALL CONSTRUCTION ITEMS ON THIS PLAN UNLESS OTHERWISE NOTED.

   -STANDARD SPECIFICATIONS FOR SEWER AND WATER CONSTRUCTION IN WISCONSIN, 6TH EDITION (SSSWCW)
   -THE WISCONSIN D.O.T. STANDARD SPECIFICATIONS FOR HIGHWAY AND STRUCTURE CONSTRUCTION, LATEST EDITION
   -WDNR STORMWATER RUNOFF TECHNICAL STANDARDS.
   -WISDOT PAL APPROVED EROSION CONTROL MEASURES LIST, LATEST EDITION.
   -CITY OF WAUKESHA DEVELOPMENT STANDARDS.
   -CITY OF WAUKESHA STANDARDS AND SPECIFICATIONS.

2. THE CONTRACTOR SHALL TAKE ALL MEASURES NECESSARY TO MINIMIZE EROSION, WATER POLLUTION AND SILTATION CAUSED BY CONSTRUCTION OF THIS PROJECT. EROSION CONTROL MEASURES SHALL BE IN ACCORDANCE WITH WISCONSIN DEPARTMENT OF NATURAL RESOURCES TECHNICAL STANDARDS.

3. EROSION CONTROL PLAN: PRIOR TO BEGINNING WORK, AN APPROVED EROSION CONTROL PLAN WILL BE PROVIDED BY THE ENGINEER. THE CONTRACTOR IS RESPONSIBLE FOR PROPERLY IMPLEMENTING THE APPROVED PLAN.

4. THE CONTRACTOR SHALL FIELD VERIFY THE ELEVATIONS OF THE BENCHMARKS PRIOR TO COMMENCING WORK. THE CONTRACTOR SHALL ALSO FIELD VERIFY LOCATION, ELEVATION AND SIZE OF EXISTING UTILITIES, AND VERIFY FLOOR, CURB OR PAVEMENT ELEVATIONS WHERE MATCHING INTO EXISTING WORK. THE CONTRACTOR SHALL FIELD VERIFY HORIZONTAL CONTROL BY REFERENCING SHOWN COORDINATES TO KNOWN PROPERTY LINES. NOTIFY ENGINEER OF DISCREPANCIES IN EITHER VERTICAL OR HORIZONTAL CONTROL PRIOR TO PROCEEDING WITH WORK.

5. THE CONTRACTOR SHALL VERIFY THE EXACT LOCATION OF ALL UNDERGROUND UTILITIES PRIOR TO BEGINNING CONSTRUCTION (CALL DIGGERS HOTLINE AT 800-242-8511). COST OF REPLACEMENT OR REPAIR OF EXISTING UTILITIES DAMAGED AS A RESULT OF THE CONTRACTOR'S OPERATION SHALL BE THE CONTRACTOR'S RESPONSIBILITY.

6. EXISTING UTILITY INFORMATION IS SHOWN FROM SURVEY WORK, FIELD OBSERVATIONS, AVAILABLE PUBLIC RECORDS, AND AS-BUILT DRAWINGS. EXACT LOCATIONS AND ELEVATIONS OF UTILITIES SHALL BE DETERMINED PRIOR TO INSTALLING NEW WORK. EXCAVATE TEST PITS AS REQUIRED.

7. PROPERTY CORNERS SHALL BE CAREFULLY PROTECTED UNTIL THEY HAVE BEEN REFERENCED BY A PROFESSIONAL LAND SURVEYOR. PROPERTY MONUMENTS DISTURBED BY THE CONTRACTOR'S OPERATIONS SHALL BE REPLACED AT THE CONTRACTOR'S EXPENSE.

8. ENGINEER SHALL BE NOTIFIED 48 HOURS IN ADVANCE OF PERFORMING ANY CONSTRUCTION.

9. ALL TRENCHING SHALL BE PERFORMED ACCORDING TO OSHA STANDARDS.

10. ALL ITEMS SHALL INCLUDE ALL THE NECESSARY MATERIALS AND LABOR TO COMPLETE THE ITEM IN PLACE.

11. THE CONTRACTOR SHALL CLEAN ALL ADJACENT STREETS OF ANY SEDIMENT OR DEBRIS BY SWEEPING BEFORE THE END OF THE WORKING DAY.

12. THE CONTRACTOR MUST AND IS REQUIRED TO NOTIFY THE CITY OF WAUKESHA SEWER AND WATER UTILITY A MINIMUM OF 7 DAYS IN ADVANCE OF WATER MAIN FILLING, WATER MAIN FLUSHING, WATER MAIN TESTING AND WATER MAIN CONNECTIONS. NO CONNECTION SHALL BE MADE TO THE EXISTING WATER SYSTEM UNTIL SAFE SAMPLES FROM THE NEW MAIN HAVE BEEN OBTAINED. THE CITY OF WAUKESHA WILL REQUIRE A METER WHEN FLUSHING THE WATER MAIN AFTER THE PRESSURE TEST AND SAFE WATER SAMPLE IS TAKEN.

13. CONTRACTOR SHALL NOTIFY THE CITY OF WAUKESHA 7 DAYS PRIOR TO STARTING ANY PUBLIC WATER MAIN AND CULVERT CONSTRUCTION.

14. DEVELOPER IS RESPONSIBLE FOR MOVING AND COSTS OF ANY CITY OWNED STREET LIGHT FACILITY THAT CONFLICTS WITH THE PROPOSED PROJECT. ALL WORK REQUIRED FOR RELOCATING CITY OWNED STREET LIGHTS MUST BE DONE TO CURRENT CITY STANDARDS. CONTACT JEFFERY HERNKE, 262-524-3592 jhernke@waukesha-wi.gov.

ALL SITE IMPROVEMENTS AND CONSTRUCTION SHOWN ON THE PLANS SHALL CONFORM TO THE CITY OF WAUKESHA DEVELOPMENT HANDBOOK & INFRASTRUCTURE SPECIFICATIONS. WHERE THE PLANS DO NOT COMPLY, IT SHALL BE THE SOLE RESPONSIBILITY AND EXPENSE OF THE DEVELOPER TO MAKE REVISIONS TO THE PLANS AND/OR CONSTRUCTED INFRASTRUCTURE TO COMPLY.

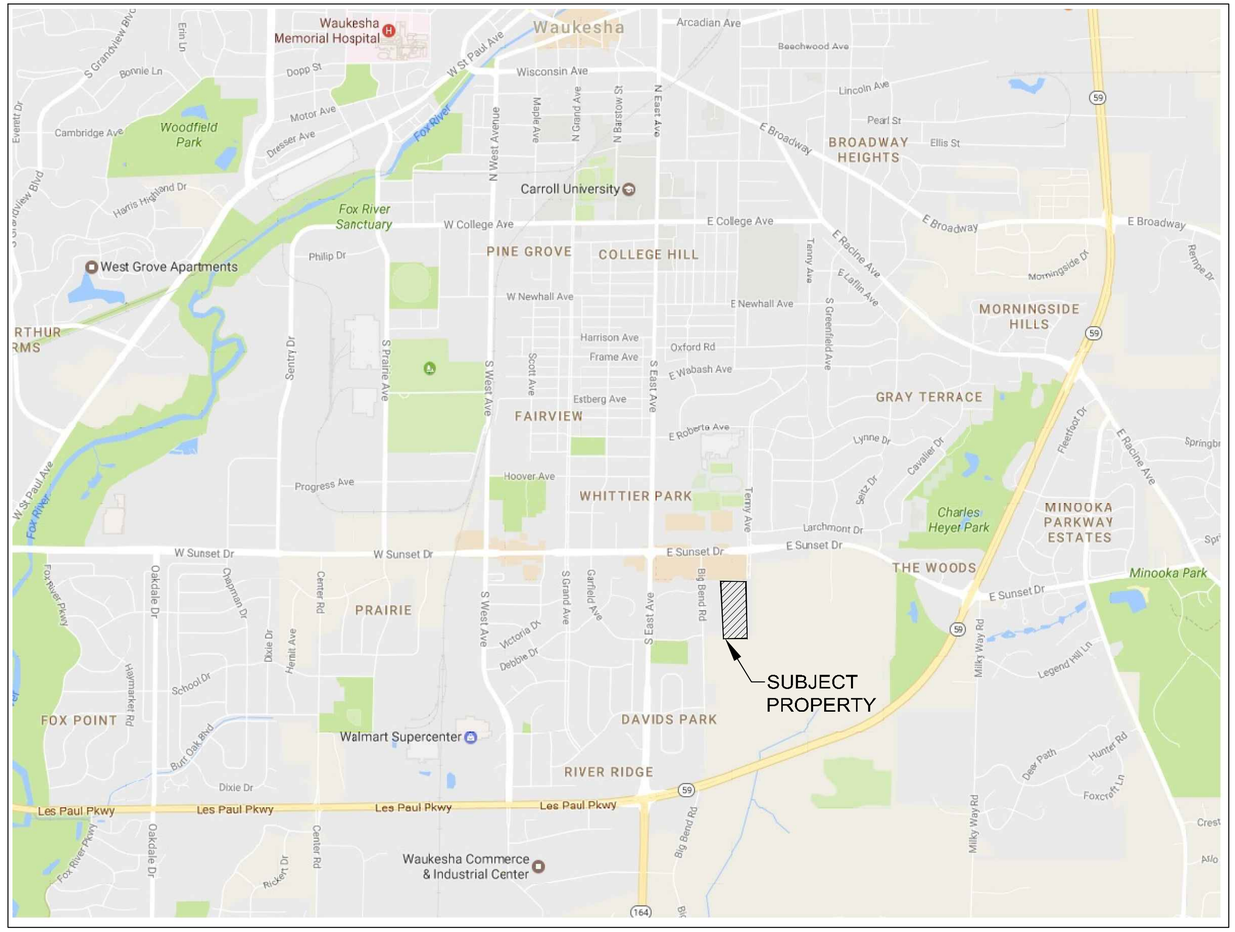

LOCATION MAP

NOT TO SCALE

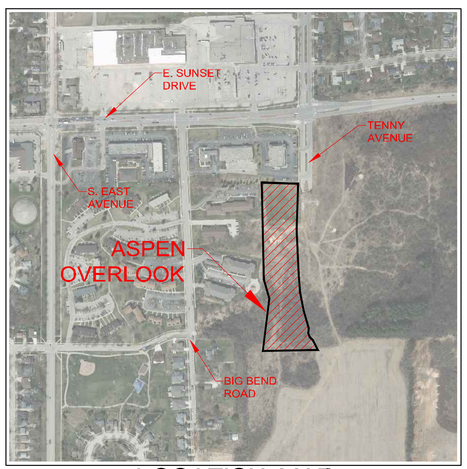

LOCATION MAP

NOT TO SCALE

CONTRACTOR IS REQUIRED TO CONTACT DIGGERS HOTLINE TOLL FREE TO OBTAIN LOCATION OF UNDERGROUND UTILITIES PRIOR TO COMMENCING THE WORK. WISCONSIN STATUTE 182.0715 REQUIRES MIN. OF 3 WORK DAYS NOTICE BEFORE YOU EXCAVATE

CALL DIGGERS HOTLINE 1-800-242-8511

NOTE:
EXISTING UNDERGROUND UTILITY INFORMATION WAS OBTAINED FROM AVAILABLE RECORDS. THE ENGINEER MAKES NO GUARANTEE AS TO THE ACCURACY OF THIS INFORMATION. VERIFICATION TO THE SATISFACTION OF THE CONTRACTOR OF ALL UNDERGROUND UTILITIES, WHETHER OR NOT SHOWN ON THE PLANS, SHALL BE ASSUMED AS A CONDITION OF THE CONTRACT. THE CONTRACTOR SHALL NOTIFY THE ENGINEER OF ANY DISCREPANCIES BETWEEN LOCATION OF UTILITIES IN THE FIELD AND LOCATIONS SHOWN ON THE PLANS.

SHEET INDEX

CIVIL

T1	-	COVER SHEET
C1.0	-	EXISTING SITE PLAN
C1.1	-	OVERALL SITE PLAN
C1.2-1.3	-	DETAILED SITE PLAN (NORTH & SOUTH)
C2.0-2.1	-	GRADING PLAN (NORTH & SOUTH)
C2.2	-	POND PLAN
C3.0	-	EROSION CONTROL PLAN
C4.0-4.1	-	SITE UTILITY PLAN (NORTH & SOUTH)
C4.2	-	WATER MAIN PLAN AND PROFILE
C5.0-5.1	-	CONSTRUCTION NOTES AND DETAILS
C6.0	-	PROJECT SPECIFICATIONS

WISCONSIN PROFESSIONAL ENGINEER
JOSHUA D. PUDELKO
E-39-RL
WAUWATOSA, WI

TRIO DESIGN • LAND SURVEYING • CIVIL ENGINEERING
12660 W. NORTH AVENUE, BLDG. "D"
BROOKFIELD, WI 53005
PHONE: (262) 790-1480
FAX: (262) 790-1481
EMAIL: jpudelko@trioeng.com

PROJECT:
ASPEN OVERLOOK
TENNY AVENUE (EXTENDED) & LES PAUL PARKWAY
WAUKESHA, WISCONSIN
CORNERSTONE DEVELOPMENT OF S.E. WI
N63 W23849 MAIN STREET
SUSSEX, WI 53089

REVISION HISTORY

DATE	DESCRIPTION
01/05/21	INITIAL SUBMITTAL
02/22/21	PER CITY COMMENTS

DATE:
FEBRUARY 22, 2021

JOB NUMBER:
889-12011-01

DESCRIPTION:
COVER SHEET

SHEET
T1

H:\C800\889\12011-01\CONSTRUCTION PLANS\2020-ASPEN OVERLOOK\CIVIL PLANS_ASPEN OVERLOOK-22X34.DWG

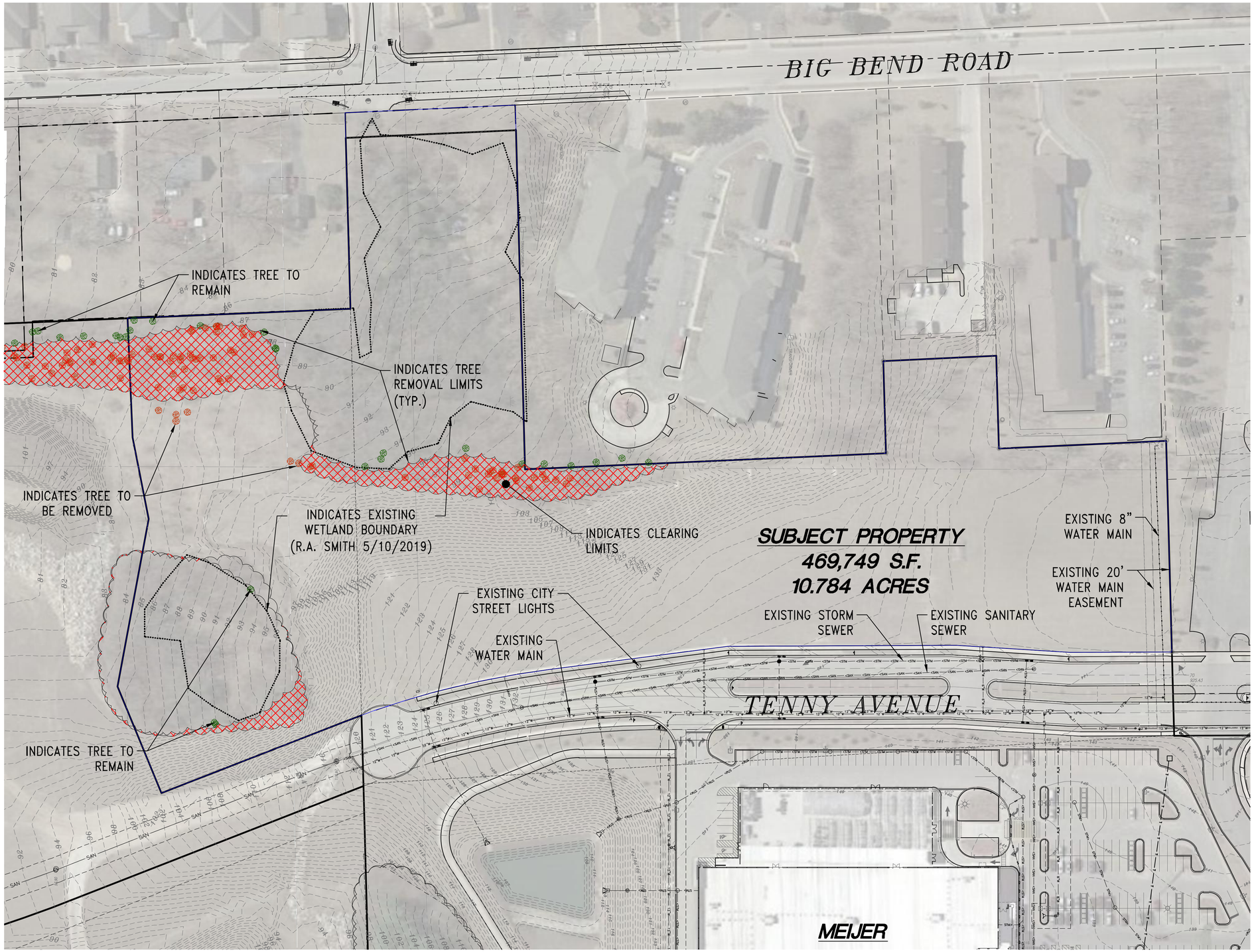

LEGEND:

- EXISTING CONTOUR
- SAN – EXISTING SANITARY SEWER
- EXISTING SANITARY MANHOLE
- W – EXISTING WATER MAIN
- EXISTING HYDRANT
- ST – EXISTING STORM SEWER
- EXISTING STORM MANHOLE
- EXISTING STORM INLET
- EXISTING TRANSFORMER
- EXISTING ELECTRIC PEDESTAL
- EXISTING TELEPHONE PEDESTAL
- EXISTING CATV PEDESTAL
- EXISTING POWER POLE

0 30 60 120

CONTRACTOR IS REQUIRED TO CONTACT DIGGERS HOTLINE TOLL FREE TO OBTAIN LOCATION OF UNDERGROUND UTILITIES PRIOR TO COMMENCING THE WORK. WISCONSIN STATUTE 182.0715 REQUIRES MIN. OF 3 WORK DAYS NOTICE BEFORE YOU EXCAVATE.
CALL DIGGERS HOTLINE 1-800-242-8511

NOTE:
EXISTING UNDERGROUND UTILITY INFORMATION WAS OBTAINED FROM AVAILABLE RECORDS. THE ENGINEER MAKES NO GUARANTEE AS TO THE ACCURACY OF THIS INFORMATION. VERIFICATION TO THE SATISFACTION OF THE CONTRACTOR OF ALL UNDERGROUND UTILITIES, WHETHER OR NOT SHOWN ON THE PLANS, SHALL BE ASSUMED AS A CONDITION OF THE CONTRACT. THE CONTRACTOR SHALL NOTIFY THE ENGINEER OF ANY DISCREPANCIES BETWEEN LOCATION OF UTILITIES IN THE FIELD AND LOCATIONS SHOWN ON THE PLANS.

WISCONSIN
JOSHUA D. PUDELKO
E-39-RCL
WAUWATOSA, WI
PROFESSIONAL ENGINEER

TRIO
DESIGN • LAND SURVEYING
CIVIL ENGINEERING
12660 W. NORTH AVENUE, BLDG. "D"
BROOKFIELD, WI 53005
PHONE: (262) 790-1480
FAX: (262) 790-1481
EMAIL: jpudelko@trioeng.com

PROJECT:
ASPEN OVERLOOK
TENNY AVENUE (EXTENDED) & LES PAUL PARKWAY
WAUKESHA, WISCONSIN
CORNERSTONE DEVELOPMENT OF S.E. WI
N63 W23849 MAIN STREET
SUSSEX, WI 53089

REVISION HISTORY

DATE	DESCRIPTION
01/05/21	INITIAL SUBMITTAL
02/22/21	PER CITY COMMENTS

DATE:
FEBRUARY 22, 2021

JOB NUMBER:
889-12011-01

DESCRIPTION:
EXISTING SITE PLAN

SHEET
C1.0

H:\C800\889\12011-01\CONSTRUCTION PLANS\2020-ASPEN OVERLOOK\CIVIL PLANS_ASPEN OVERLOOK-22X34.DWG

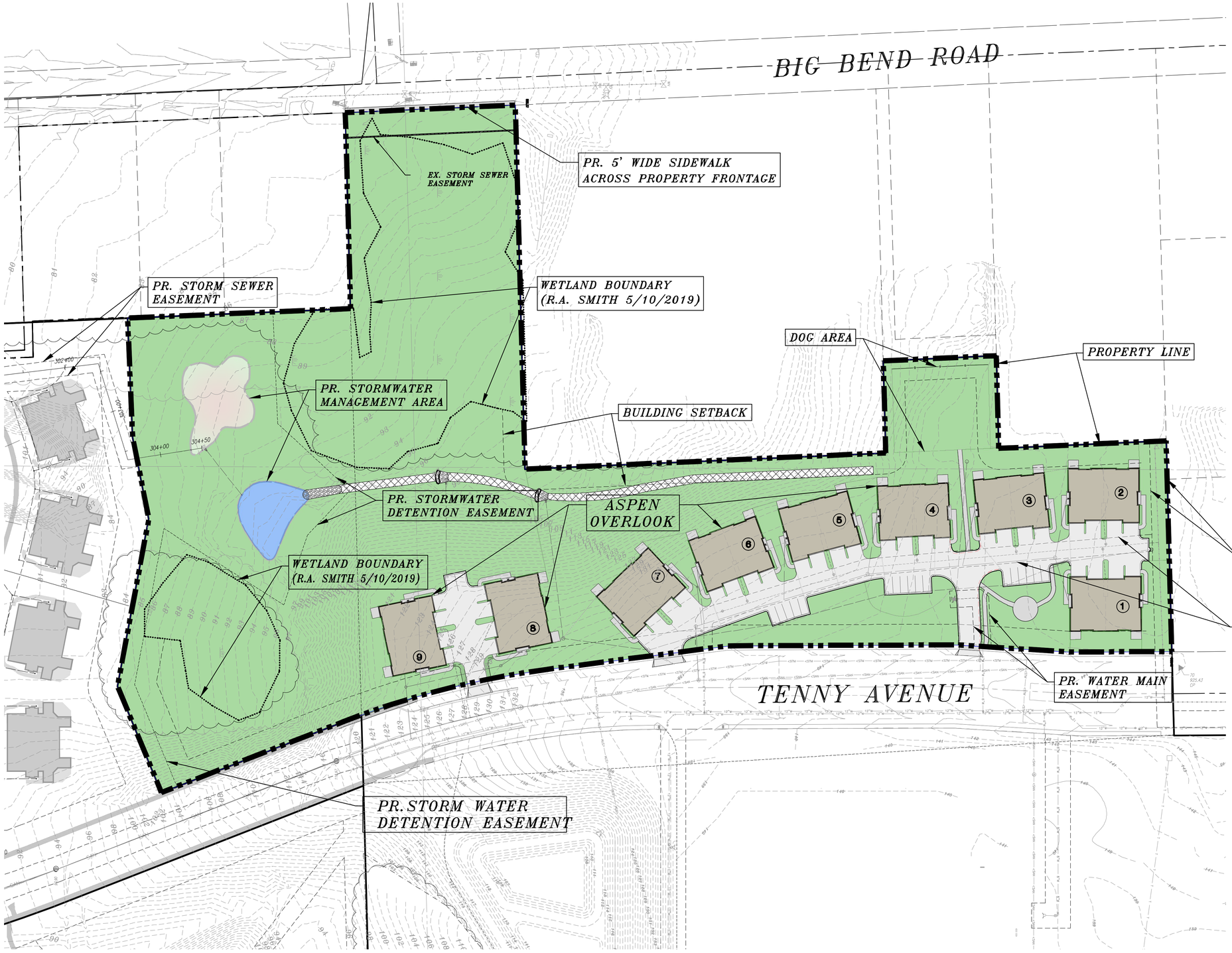

LEGEND:

- EXISTING CONTOUR
- SAN — EXISTING SANITARY SEWER
- EXISTING SANITARY MANHOLE
- W — EXISTING WATER MAIN
- EXISTING HYDRANT
- ST — EXISTING STORM SEWER
- EXISTING STORM MANHOLE
- EXISTING STORM INLET
- EXISTING TRANSFORMER
- EXISTING ELECTRIC PEDESTAL
- EXISTING TELEPHONE PEDESTAL
- EXISTING CATV PEDESTAL
- EXISTING POWER POLE
- PROPOSED SANITARY SEWER
- PROPOSED SANITARY MANHOLE
- PROPOSED WATER MAIN
- PROPOSED HYDRANT
- PROPOSED WATER VALVE
- PROPOSED STORM SEWER
- PROPOSED STORM MANHOLE
- PROPOSED STORM INLET
- PROPOSED STORM END SECTION

SITE DATA

LOT AREA DATA:	
TOTAL LOT AREA:	475,842 S.F. (10.924 Acres)
TOTAL IMPERVIOUS AREA:	97,492 S.F. (2.170 Acres) 20.49% of Lot
TOTAL POND AREA:	11,415 S.F. (0.262 Acres) 2.40% of Lot
TOTAL OPEN SPACE AREA:	366,935 S.F. (8.422 Acres) 77.11% of Lot
PROPOSED DISTURBED AREA:	318,936 S.F. (7.322 Acres)

PARKING DATA:	
PROPOSED GARAGE PARKING:	72 SPACES
PROPOSED DRIVEWAY SPACES:	72 SPACES
PROPOSED STANDARD SPACES:	19 SPACES
TOTAL PROPOSED SPACES:	163 SPACES

0 30 60 120

CONTRACTOR IS REQUIRED TO CONTACT DIGGERS HOTLINE TOLL FREE TO OBTAIN LOCATION OF UNDERGROUND UTILITIES PRIOR TO COMMENCING THE WORK. WISCONSIN STATUTE 182.0715 REQUIRES MIN. OF 3 WORK DAYS NOTICE BEFORE YOU EXCAVATE.
CALL DIGGERS HOTLINE 1-800-242-8511

NOTE:
EXISTING UNDERGROUND UTILITY INFORMATION WAS OBTAINED FROM AVAILABLE RECORDS. THE ENGINEER MAKES NO GUARANTEE AS TO THE ACCURACY OF THIS INFORMATION. VERIFICATION TO THE SATISFACTION OF THE CONTRACTOR OF ALL UNDERGROUND UTILITIES, WHETHER OR NOT SHOWN ON THE PLANS, SHALL BE ASSUMED AS A CONDITION OF THE CONTRACT. THE CONTRACTOR SHALL NOTIFY THE ENGINEER OF ANY DISCREPANCIES BETWEEN LOCATION OF UTILITIES IN THE FIELD AND LOCATIONS SHOWN ON THE PLANS.

WISCONSIN
JOSHUA D. PUDELKO
E-39-RL
WAUWATOSA, WI
PROFESSIONAL ENGINEER

TRIO
DESIGN • LAND SURVEYING
CIVIL ENGINEERING

12660 W. NORTH AVENUE, BLDG. "D"
BROOKFIELD, WI 53005
PHONE: (262) 790-1480
FAX: (262) 790-1481
EMAIL: jpudelko@trioeng.com

PROJECT:
ASPEN OVERLOOK
TENNY AVENUE (EXTENDED) & LES PAUL PARKWAY
WAUKESHA, WISCONSIN
CORNERSTONE DEVELOPMENT OF S.E. WI
N63 W23849 MAIN STREET
SUSSEX, WI 53089

REVISION HISTORY

DATE	DESCRIPTION
09/06/21	INITIAL SUBMITTAL
02/22/21	PER CITY COMMENTS

DATE:
FEBRUARY 22, 2021

JOB NUMBER:
889-12011-01

DESCRIPTION:
OVERALL SITE PLAN

SHEET
C1.1

H:\C800\889\12011-01\CONSTRUCTION PLANS\2020-ASPEN OVERLOOK\CIVIL PLANS_ASPEN OVERLOOK-22X34.DWG

LEGEND:

- EXISTING CONTOUR
- SAN — EXISTING SANITARY SEWER
- EXISTING SANITARY MANHOLE
- W — EXISTING WATER MAIN
- EXISTING HYDRANT
- ST — EXISTING STORM SEWER
- EXISTING STORM MANHOLE
- EXISTING STORM INLET
- EXISTING TRANSFORMER
- EXISTING ELECTRIC PEDESTAL
- EXISTING TELEPHONE PEDESTAL
- EXISTING CATV PEDESTAL
- EXISTING POWER POLE
- PROPOSED SANITARY SEWER
- PROPOSED SANITARY MANHOLE
- PROPOSED WATER MAIN
- PROPOSED HYDRANT
- PROPOSED WATER VALVE
- PROPOSED STORM SEWER
- PROPOSED STORM MANHOLE
- PROPOSED STORM INLET
- PROPOSED STORM END SECTION

0 15 30 60

CONTRACTOR IS REQUIRED TO CONTACT DIGGERS HOTLINE TOLL FREE TO OBTAIN LOCATION OF UNDERGROUND UTILITIES PRIOR TO COMMENCING THE WORK. WISCONSIN STATUTE 182.0715 REQUIRES MIN. OF 3 WORK DAYS NOTICE BEFORE YOU EXCAVATE.
CALL DIGGERS HOTLINE 1-800-242-8511

NOTE:
EXISTING UNDERGROUND UTILITY INFORMATION WAS OBTAINED FROM AVAILABLE RECORDS. THE ENGINEER MAKES NO GUARANTEE AS TO THE ACCURACY OF THIS INFORMATION. VERIFICATION TO THE SATISFACTION OF THE CONTRACTOR OF ALL UNDERGROUND UTILITIES, WHETHER OR NOT SHOWN ON THE PLANS, SHALL BE ASSUMED AS A CONDITION OF THE CONTRACT. THE CONTRACTOR SHALL NOTIFY THE ENGINEER OF ANY DISCREPANCIES BETWEEN LOCATION OF UTILITIES IN THE FIELD AND LOCATIONS SHOWN ON THE PLANS.

H:\C800\889\12011-01\CONSTRUCTION PLANS\2020-ASPEN OVERLOOK\CIVIL PLANS\ASPEN OVERLOOK-22X34.DWG

WISCONSIN
JOSHUA D. PUDELKO
E-39-PE
WAUWATOSA, WI
PROFESSIONAL ENGINEER

TRIO
DESIGN • LAND SURVEYING
CIVIL ENGINEERING
12660 W. NORTH AVENUE, BLDG. "D"
BROOKFIELD, WI 53005
PHONE: (262) 790-1480
FAX: (262) 790-1481
EMAIL: jpudelko@trioeng.com

PROJECT:
ASPEN OVERLOOK
TENNY AVENUE (EXTENDED) & LES PAUL PARKWAY
WAUKESHA, WISCONSIN
CORNERSTONE DEVELOPMENT OF S.E. WI
N63 W23849 MAIN STREET
SUSSEX, WI 53089

REVISION HISTORY

DATE	DESCRIPTION
01/05/21	INITIAL SUBMITTAL
02/22/21	PER CITY COMMENTS

DATE:
FEBRUARY 22, 2021

JOB NUMBER:
889-12011-01

DESCRIPTION:
DETAILED SITE PLAN (NORTH)

SHEET
C1.2

SIDEWALK IMPROVEMENTS – BIG BEND RD
SCALE: 1" = 30'

LEGEND:

- EXISTING CONTOUR
- SAN – EXISTING SANITARY SEWER
- EXISTING SANITARY MANHOLE
- W – EXISTING WATER MAIN
- EXISTING HYDRANT
- ST – EXISTING STORM SEWER
- EXISTING STORM MANHOLE
- EXISTING STORM INLET
- EXISTING TRANSFORMER
- EXISTING ELECTRIC PEDESTAL
- EXISTING TELEPHONE PEDESTAL
- EXISTING CATV PEDESTAL
- EXISTING POWER POLE
- PROPOSED SANITARY SEWER
- PROPOSED SANITARY MANHOLE
- PROPOSED WATER MAIN
- PROPOSED HYDRANT
- PROPOSED WATER VALVE
- PROPOSED STORM SEWER
- PROPOSED STORM MANHOLE
- PROPOSED STORM INLET
- PROPOSED STORM END SECTION

CONTRACTOR IS REQUIRED TO CONTACT DIGGERS HOTLINE TOLL FREE TO OBTAIN LOCATION OF UNDERGROUND UTILITIES PRIOR TO COMMENCING THE WORK. WISCONSIN STATUTE 182.0715 REQUIRES MIN. OF 3 WORK DAYS NOTICE BEFORE YOU EXCAVATE.
CALL DIGGERS HOTLINE 1-800-242-8511

NOTE:
EXISTING UNDERGROUND UTILITY INFORMATION WAS OBTAINED FROM AVAILABLE RECORDS. THE ENGINEER MAKES NO GUARANTEE AS TO THE ACCURACY OF THIS INFORMATION. VERIFICATION TO THE SATISFACTION OF THE CONTRACTOR OF ALL UNDERGROUND UTILITIES, WHETHER OR NOT SHOWN ON THE PLANS, SHALL BE ASSUMED AS A CONDITION OF THE CONTRACT. THE CONTRACTOR SHALL NOTIFY THE ENGINEER OF ANY DISCREPANCIES BETWEEN LOCATION OF UTILITIES IN THE FIELD AND LOCATIONS SHOWN ON THE PLANS.

WISCONSIN
JOSHUA D. PUDELKO
E-39-621
WAUWATOSA, WI
PROFESSIONAL ENGINEER

TRIO
DESIGN • LAND SURVEYING
CIVIL ENGINEERING
12660 W. NORTH AVENUE, BLDG. "D"
BROOKFIELD, WI 53005
PHONE: (262) 790-1480
FAX: (262) 790-1481
EMAIL: jpudelko@trioeng.com

PROJECT:
ASPEN OVERLOOK
TENNY AVENUE (EXTENDED) & LES PAUL PARKWAY
WAUKESHA, WISCONSIN
CORNERSTONE DEVELOPMENT OF S.E. WI
N63 W23849 MAIN STREET
SUSSEX, WI 53089

REVISION HISTORY

DATE	DESCRIPTION
01/05/21	INITIAL SUBMITTAL
02/22/21	PER CITY COMMENTS

DATE:
FEBRUARY 22, 2021

JOB NUMBER:
889-12011-01

DESCRIPTION:
DETAILED SITE PLAN (SOUTH)

SHEET
C1.3

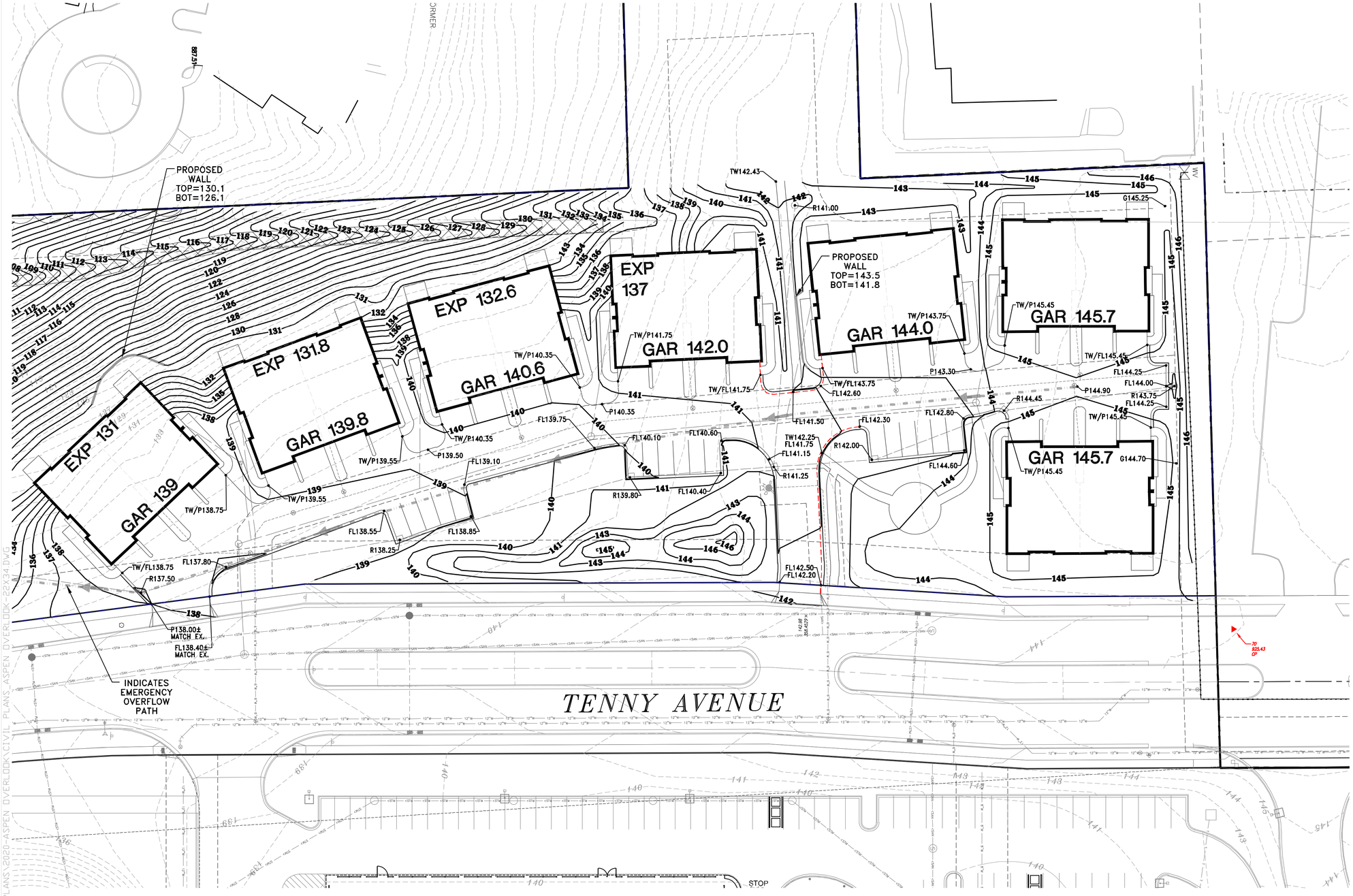

LEGEND:

- EXISTING CONTOUR
- 817 — PROPOSED CONTOUR
- PROPOSED FLOW ARROW
- 817.00 — PROPOSED SPOT ELEVATION
- GAR=21.0 — PROPOSED GARAGE FLR. ELEV.
- EXP=17.0 — PROPOSED EXPOSURE GRADE

GRADING PLAN NOTES:

1. IN ALL LOCATIONS WHERE ELEVATIONS ARE SHOWN AS ±, THE ELEVATION HAS BEEN DETERMINED BASED ON INTERPOLATED GRADES FROM THE SURVEY. CONTRACTOR IS TO VERIFY THESE GRADES PRIOR TO CONSTRUCTION OF ANY IMPROVEMENTS WITHIN THE PROXIMITY OF THESE INTERPOLATED GRADES AND REPORT THEM TO THE DESIGN ENGINEER FOR VERIFICATION OF PROPOSED SLOPES PRIOR TO INSTALLATION OF PROPOSED IMPROVEMENTS. DESIGN ENGINEER IS NOT RESPONSIBLE FOR SLOPES OF PROPOSED IMPROVEMENTS BASED ON THESE ± GRADES WITHOUT CONFIRMATION OF EXISTING ELEVATIONS AT TIME OF CONSTRUCTION.
2. THE FOLLOWING DESIGNATIONS WILL IDENTIFY WHAT EACH SPOT ELEVATION REPRESENTS:
   - TOP OF CURB (TC)
   - TOP OF WALK (TW)
   - FLANGE GRADE (FL)
   - PAVEMENT (P)

0 15 30 60

CONTRACTOR IS REQUIRED TO CONTACT DIGGERS HOTLINE TOLL FREE TO OBTAIN LOCATION OF UNDERGROUND UTILITIES PRIOR TO COMMENCING THE WORK. WISCONSIN STATUTE 182.0715 REQUIRES MIN. OF 3 WORK DAYS NOTICE BEFORE YOU EXCAVATE.
CALL DIGGERS HOTLINE 1-800-242-8511

NOTE:
EXISTING UNDERGROUND UTILITY INFORMATION WAS OBTAINED FROM AVAILABLE RECORDS. THE ENGINEER MAKES NO GUARANTEE AS TO THE ACCURACY OF THIS INFORMATION. VERIFICATION TO THE SATISFACTION OF THE CONTRACTOR OF ALL UNDERGROUND UTILITIES, WHETHER OR NOT SHOWN ON THE PLANS, SHALL BE ASSUMED AS A CONDITION OF THE CONTRACT. THE CONTRACTOR SHALL NOTIFY THE ENGINEER OF ANY DISCREPANCIES BETWEEN LOCATION OF UTILITIES IN THE FIELD AND LOCATIONS SHOWN ON THE PLANS.

WISCONSIN PROFESSIONAL ENGINEER
JOSHUA D. PUDELKO
E-39-PE
WAUWATOSA, WI

TRIO DESIGN • LAND SURVEYING • CIVIL ENGINEERING
12660 W. NORTH AVENUE, BLDG. "D"
BROOKFIELD, WI 53005
PHONE: (262) 790-1480
FAX: (262) 790-1481
EMAIL: jpudelko@trioeng.com

PROJECT:
ASPEN OVERLOOK
TENNY AVENUE (EXTENDED) & LES PAUL PARKWAY
WAUKESHA, WISCONSIN
CORNERSTONE DEVELOPMENT OF S.E. WI
N63 W23849 MAIN STREET
SUSSEX, WI 53089

REVISION HISTORY

DATE	DESCRIPTION
01/05/21	INITIAL SUBMITTAL
02/22/21	PER CITY COMMENTS

DATE:
FEBRUARY 22, 2021

JOB NUMBER:
889-12011-01

DESCRIPTION:
GRADING PLAN (NORTH)

SHEET
C2.0

H:\C800\889\12011-01\CONSTRUCTION PLANS\2020-ASPEN OVERLOOK\CIVIL PLANS_ASPEN OVERLOOK-22X34.DWG

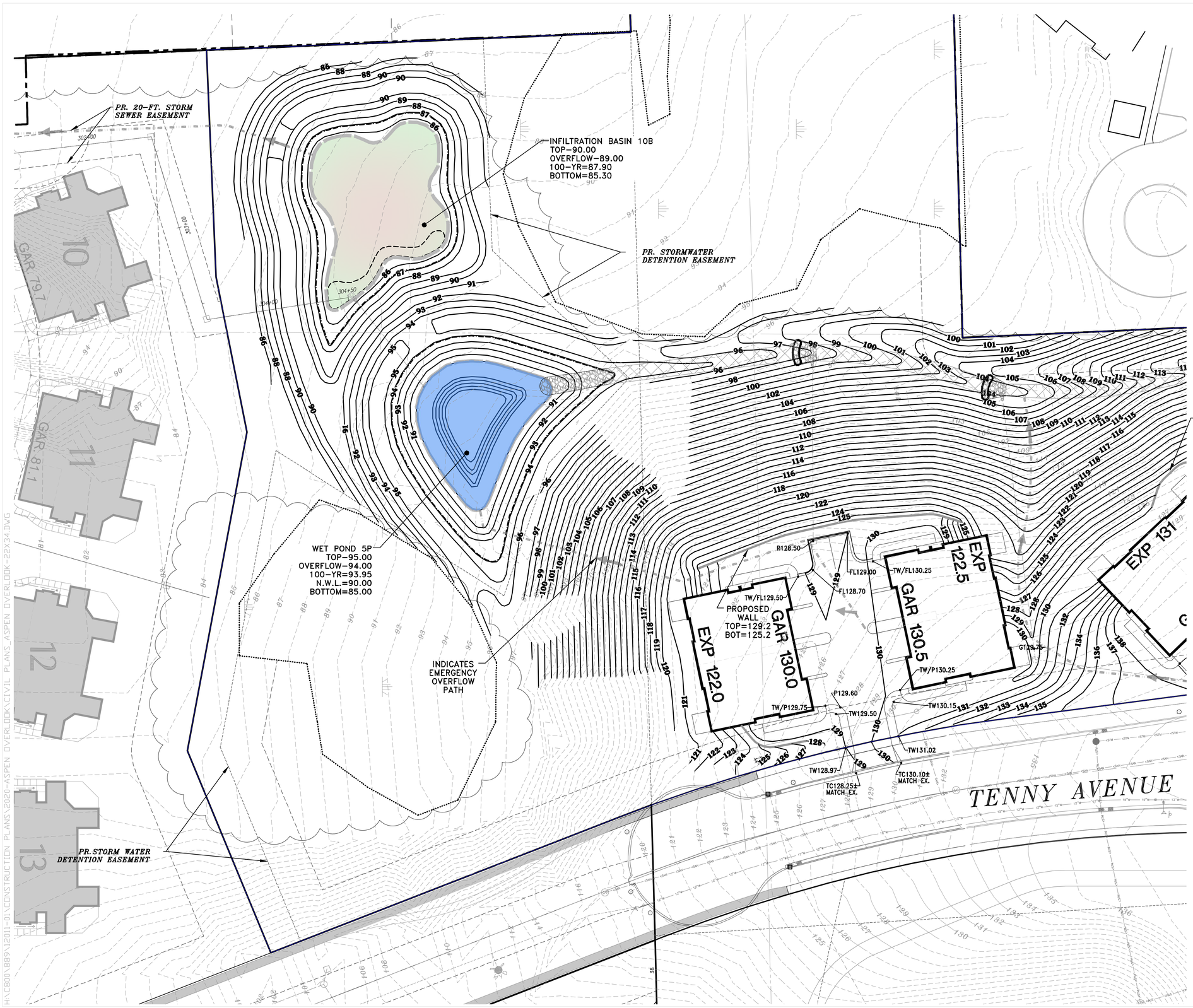

LEGEND:

	– EXISTING CONTOUR
817	– PROPOSED CONTOUR
	– PROPOSED FLOW ARROW
817.00	– PROPOSED SPOT ELEVATION
GAR=21.0	– PROPOSED GARAGE FLR. ELEV.
EXP=17.0	– PROPOSED EXPOSURE GRADE

GRADING PLAN NOTES:

1. IN ALL LOCATIONS WHERE ELEVATIONS ARE SHOWN AS ±, THE ELEVATION HAS BEEN DETERMINED BASED ON INTERPOLATED GRADES FROM THE SURVEY. CONTRACTOR IS TO VERIFY THESE GRADES PRIOR TO CONSTRUCTION OF ANY IMPROVEMENTS WITHIN THE PROXIMITY OF THESE INTERPOLATED GRADES AND REPORT THEM TO THE DESIGN ENGINEER FOR VERIFICATION OF PROPOSED SLOPES PRIOR TO INSTALLATION OF PROPOSED IMPROVEMENTS. DESIGN ENGINEER IS NOT RESPONSIBLE FOR SLOPES OF PROPOSED IMPROVEMENTS BASED ON THESE ± GRADES WITHOUT CONFIRMATION OF EXISTING ELEVATIONS AT TIME OF CONSTRUCTION.
2. THE FOLLOWING DESIGNATIONS WILL IDENTIFY WHAT EACH SPOT ELEVATION REPRESENTS:
   - TOP OF CURB (TC)
   - TOP OF WALK (TW)
   - FLANGE GRADE (FL)
   - PAVEMENT (P)

CONTRACTOR IS REQUIRED TO CONTACT DIGGERS HOTLINE TOLL FREE TO OBTAIN LOCATION OF UNDERGROUND UTILITIES PRIOR TO COMMENCING THE WORK. WISCONSIN STATUTE 182.0715 REQUIRES MIN. OF 3 WORK DAYS NOTICE BEFORE YOU EXCAVATE.
CALL DIGGERS HOTLINE 1-800-242-8511

NOTE:
EXISTING UNDERGROUND UTILITY INFORMATION WAS OBTAINED FROM AVAILABLE RECORDS. THE ENGINEER MAKES NO GUARANTEE AS TO THE ACCURACY OF THIS INFORMATION. VERIFICATION TO THE SATISFACTION OF THE CONTRACTOR OF ALL UNDERGROUND UTILITIES, WHETHER OR NOT SHOWN ON THE PLANS, SHALL BE ASSUMED AS A CONDITION OF THE CONTRACT. THE CONTRACTOR SHALL NOTIFY THE ENGINEER OF ANY DISCREPANCIES BETWEEN LOCATION OF UTILITIES IN THE FIELD AND LOCATIONS SHOWN ON THE PLANS.

WISCONSIN PROFESSIONAL ENGINEER
JOSHUA D. PUDELKO
E-39-PE
WAUWATOSA WI

TRIO DESIGN • LAND SURVEYING • CIVIL ENGINEERING
12660 W. NORTH AVENUE, BLDG. "D"
BROOKFIELD, WI 53005
PHONE: (262) 790-1480
FAX: (262) 790-1481
EMAIL: jpudelko@trioeng.com

PROJECT: ASPEN OVERLOOK

TENNY AVENUE (EXTENDED) & LES PAUL PARKWAY
WAUKESHA, WISCONSIN
CORNERSTONE DEVELOPMENT OF S.E. WI
N63 W23849 MAIN STREET
SUSSEX, WI 53089

REVISION HISTORY

DATE	DESCRIPTION
01/05/21	INITIAL SUBMITTAL
02/22/21	PER CITY COMMENTS

DATE: FEBRUARY 22, 2021

JOB NUMBER: 889-12011-01

DESCRIPTION: GRADING PLAN (SOUTH)

SHEET C2.1

H:\C800\889\12011-01\CONSTRUCTION PLANS\2020-ASPEN OVERLOOK\CIVIL PLANS_ASPEN OVERLOOK-22X34.DWG

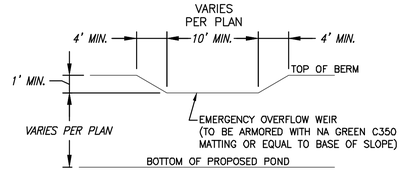

TYPICAL EMERGENCY OVERFLOW WEIR DETAIL

NOT TO SCALE

NOTE: GRADES FOR TOP OF BERM, OVERFLOW SPILLWAY, AND BOTTOM OF POND SHALL BE PER PLAN.

CLAY LINER NOTE:
- 2' THICK CLAY LINER IN ACCORDANCE WITH WDNR TECH. STD. 1001 TYPE B, AND SOILS REPORT.
- CLAY LINER MATERIALS SHOULD BE COMPACTED TO A MINIMUM OF 90 TO 92% DRY DENSITY AS DETERMINED BY MODIFIED PROCTOR (ASTM D1557)
- IF PREDOMINANTLY GRANULAR TEXTURE SOILS AND/OR GROUNDWATER INFLOW IS ENCOUNTERED AT OR BELOW THE BOTTOM ELEVATION OF THE POND, A "SACRIFICIAL" LIFT OF CLAYEY FILL MAY BE REQUIRED TO BE PLACED ALONG THE SIDEWALLS AND BASE PRIOR TO COMMENCING WITH ACTUAL LINER PLACEMENT/CONSTRUCTION TO AID IN ATTAINING A SATISFACTORILY COMPACTED LINER SECTION. THE PLACEMENT OF A "SACRIFICIAL" LAYER IS PARTICULARY BENEFICIAL IN CREATING A STABLE SUBBASE IN THE EVENT SLIGHT GROUNDWATER SEEPAGE OCCURS.
- GEOTECHNICAL TESTING SHALL BE PERFORMED ON POTENTIAL CLAY LINER MATERIAL TO CONFIRM THAT SPECIFICATIONS ARE MET.
- CLAY LINER SHALL EXTEND UP TO 2-YEAR WATER SURFACE ELEVATION.

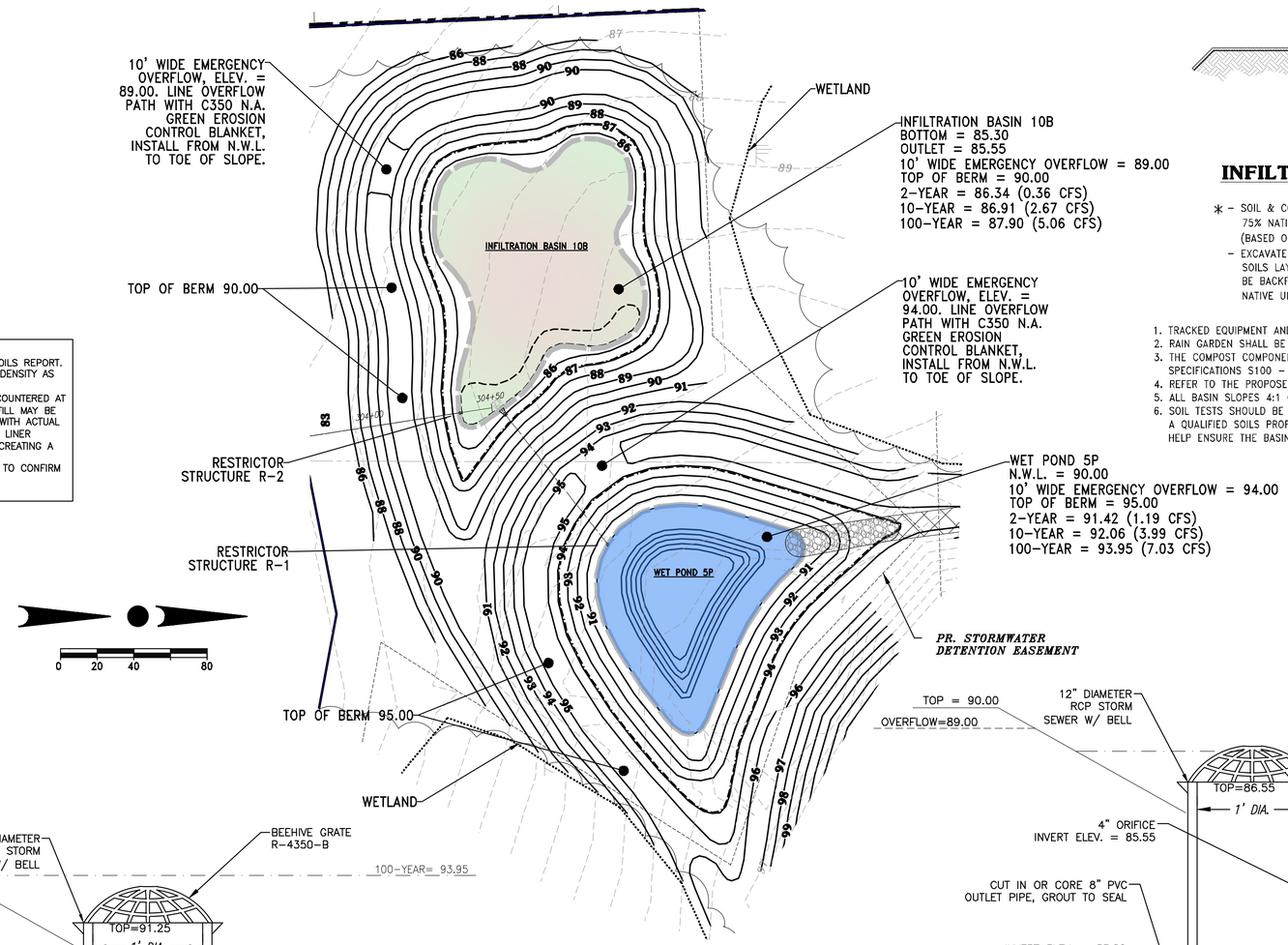

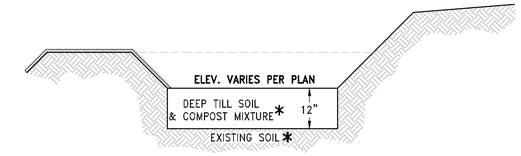

INFILTRAION BASIN TYPICAL SECTION

N.T.S.

* - SOIL & COMPOST MIXTURE SHALL BE BLENDED ON SITE AS FOLLOWS: 75% NATIVE (ON-SITE) GRANULAR SOIL & 25% COMPOST (IMPORTED) (BASED ON VOLUME)
- EXCAVATE BOTTOM OF RAIN GARDEN TO NATIVE SAND/GRAVEL LAYERS. SOILS LAYER VARIES PER GEOTECHNICAL REPORT. OVEREXCAVATION MAY BE BACKFILLED WITH OTHER ONSITE SAND OR GRAVEL MATCHING NATIVE UNDERLYING SOILS (AS DIRECTED BY GEOTECHNICAL ENGINEER).

1. TRACKED EQUIPMENT AND LOW WEIGHT VEHICLES SHALL BE USED TO CONSTRUCT RAIN GARDEN.
2. RAIN GARDEN SHALL BE CONSTRUCTED IN A MANNER THAT MINIMIZES SOIL COMPACTION.
3. THE COMPOST COMPONENT SHALL MEET THE REQUIREMENTS OF WISCONSIN DEPARTMENT OF NATURAL RESOURCES SPECIFICATIONS S100 - COMPOST.
4. REFER TO THE PROPOSED LANDSCAPING PLAN FOR BASIN PLANTINGS.
5. ALL BASIN SLOPES 4:1 OR GREATER SHALL BE PROVIDED WITH CLASS I, TYPE A EROSION MATTING.
6. SOIL TESTS SHOULD BE COMPLETED PRIOR TO BASIN CONSTRUCTION TO VERIFY THE DEPTH TO APPROPRIATE SOILS; A QUALIFIED SOILS PROFESSIONAL SHALL BE ON-SITE TO VERIFY THAT APPROPRIATE DEPTHS ARE REACHED TO HELP ENSURE THE BASIN FUNCTIONS PROPERLY.

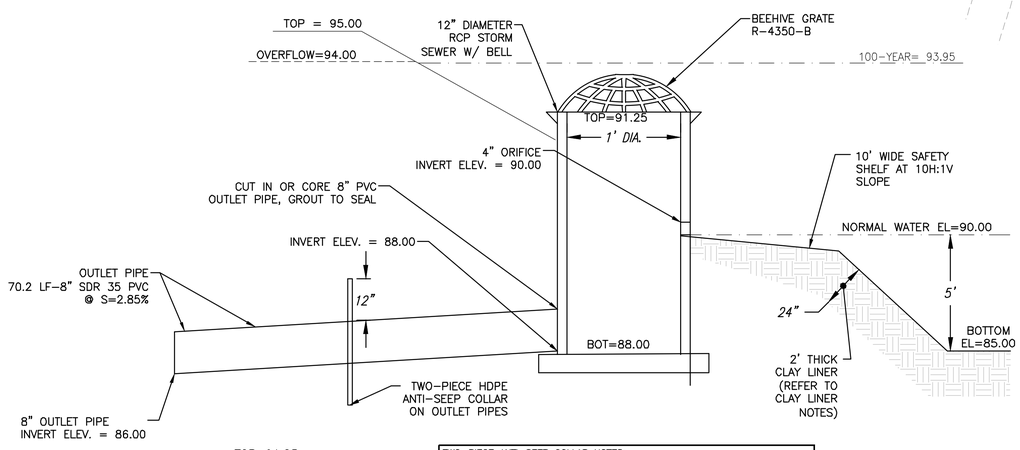

TWO-PIECE ANTI-SEEP COLLAR NOTES:
- ANTI-SEEP COLLAR MATERIAL SHALL MATCH OUTLET PIPE MATERIAL.
- ANTI-SEEP COLLARS SHALL BE 1/4" POLYETHYLENE SHEETS WITH COLLAR FOR PIPE; DIMENSIONS SHALL BE AS NOTED ON THE DETAIL.
- INSTALL ANTI-SEEP COLLARS PER MANUFACTURER SPECIFICATIONS.

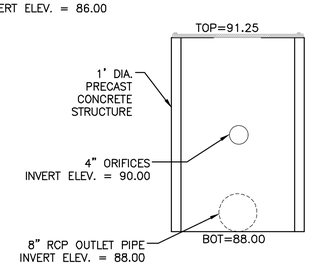

WET POND 5P & RESTRICTOR STRUCTURE R-1 DETAIL

NOT TO SCALE

TEMPORARY CONSTRUCTION NOTES:
- PROPOSED BASIN IS TO BE EXCAVATED TO THE ELEVATIONS SHOWN ON PLANS.
- SEDIMENT LEVELS WITHIN BASIN SHALL BE MONITORED PERIODICALLY THROUGHOUT THE PROJECT AND REMOVED ONCE WITHIN ONE FOOT OF THE TEMPORARY DISCHARGE PIPE.
- ONCE SITE HAS REACHED FINAL STABILIZATION, REMOVE ALL SEDIMENT, AND RESTORE ALLS POND SLOPES TO PROPOSED FINAL GRADES.

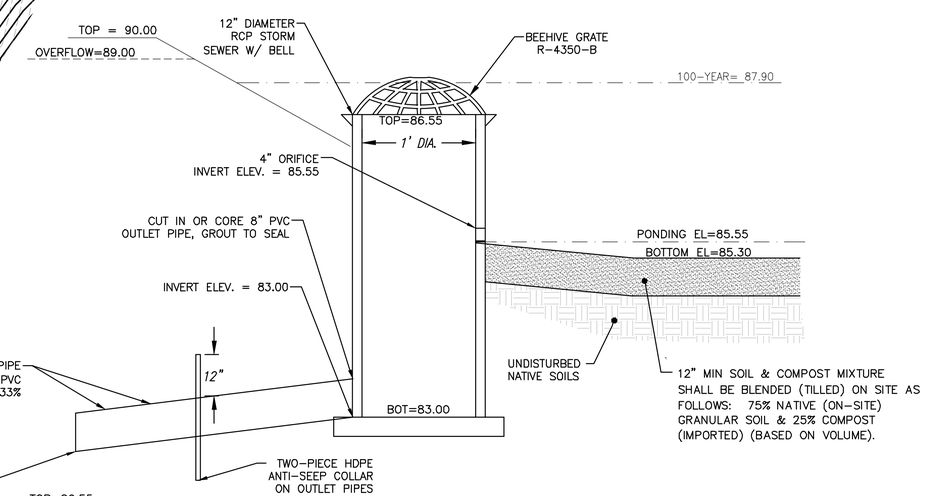

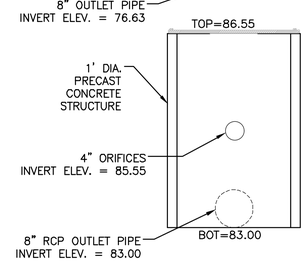

TWO-PIECE ANTI-SEEP COLLAR NOTES:
- ANTI-SEEP COLLAR MATERIAL SHALL MATCH OUTLET PIPE MATERIAL.
- ANTI-SEEP COLLARS SHALL BE 1/4" POLYETHYLENE SHEETS WITH COLLAR FOR PIPE; DIMENSIONS SHALL BE AS NOTED ON THE DETAIL.
- INSTALL ANTI-SEEP COLLARS PER MANUFACTURER SPECIFICATIONS.

INFILTRATION BASIN 10B & RESTRICTOR STRUCTURE R-2 DETAIL

NOT TO SCALE

TEMPORARY CONSTRUCTION NOTES:
- PROPOSED BASIN IS TO BE EXCAVATED TO THE ELEVATIONS SHOWN ON PLANS.
- SEDIMENT LEVELS WITHIN BASIN SHALL BE MONITORED PERIODICALLY THROUGHOUT THE PROJECT AND REMOVED ONCE WITHIN ONE FOOT OF THE TEMPORARY DISCHARGE PIPE.
- ONCE SITE HAS REACHED FINAL STABILIZATION, REMOVE ALL SEDIMENT, AND RESTORE ALLS POND SLOPES TO PROPOSED FINAL GRADES.

CONTRACTOR IS REQUIRED TO CONTACT DIGGERS HOTLINE TOLL FREE TO OBTAIN LOCATION OF UNDERGROUND UTILITIES PRIOR TO COMMENCING THE WORK. WISCONSIN STATUTE 182.0715 REQUIRES MIN. OF 3 WORK DAYS NOTICE BEFORE YOU EXCAVATE.
CALL DIGGERS HOTLINE 1-800-242-8511

NOTE:
EXISTING UNDERGROUND UTILITY INFORMATION WAS OBTAINED FROM AVAILABLE RECORDS. THE ENGINEER MAKES NO GUARANTEE AS TO THE ACCURACY OF THIS INFORMATION. VERIFICATION TO THE SATISFACTION OF THE CONTRACTOR OF ALL UNDERGROUND UTILITIES, WHETHER OR NOT SHOWN ON THE PLANS, SHALL BE ASSUMED AS A CONDITION OF THE CONTRACT. THE CONTRACTOR SHALL NOTIFY THE ENGINEER OF ANY DISCREPANCIES BETWEEN LOCATION OF UTILITIES IN THE FIELD AND LOCATIONS SHOWN ON THE PLANS.

WISCONSIN PROFESSIONAL ENGINEER
JOSHUA D. PUDELKO
E-39-RCL
WAUWATOSA WI

TRIO DESIGN • LAND SURVEYING • CIVIL ENGINEERING
12660 W. NORTH AVENUE, BLDG. "D"
BROOKFIELD, WI 53005
PHONE: (262) 790-1480
FAX: (262) 790-1481
EMAIL: jpudelko@trioeng.com

PROJECT:
ASPEN OVERLOOK
TENNY AVENUE (EXTENDED) & LES PAUL PARKWAY
WAUKESHA, WISCONSIN
CORNERSTONE DEVELOPMENT OF S.E. WI
N63 W23849 MAIN STREET
SUSSEX, WI 53089

REVISION HISTORY

DATE	DESCRIPTION
01/05/21	INITIAL SUBMITTAL
02/22/21	PER CITY COMMENTS

DATE:
FEBRUARY 22, 2021

JOB NUMBER:
889-12011-01

DESCRIPTION:
POND PLAN

SHEET
C2.2

H:\C800\889\12011-01\CONSTRUCTION PLANS\2020-ASPEN OVERLOOK\CIVIL PLANS_ASPEN OVERLOOK-22X34.DWG

WISCONSIN DEPARTMENT OF NATURAL RESOURCES, CONSERVATION PRACTICE STANDARD:

1052 – NON-CHANNEL EROSION MAT
1053 – CHANNEL EROSION MAT
1055 – SEDIMENT BALE BARRIER (NON-CHANNEL)
1056 – SILT FENCE
1057 – STONE TRACKING PAD AND TIRE WASHING
1058 – MULCHING FOR CONSTRUCTION SITES
1059 – TEMPORARY SEEDING
1060 – STORM DRAIN INLET PROTECTION FOR CONST. SITES
1061 – DEWATERING
1062 – DITCH CHECK

WINTER STABILIZATION PROVISIONS:

IF FINAL SITE STABILIZATION OCCURS AFTER OCTOBER 15, CONTRACTOR SHALL UTILIZE ANIONIC POLYACRYLAMIDE AND TEMPORARY SEEDING, AS WELL AS, COORDINATE WITH VILLAGE ENGINEER FOR LATE SEASON STABILIZATION REQUIREMENTS.

CONSTRUCTION SEQUENCE

1. INSTALL CONSTRUCTION TRACKING PAD.
2. INSTALL SITE FENCE AROUND THE PERIMETER OF THE SITE.
3. CLEAR AND GRUB CONSTRUCTION AREAS.
4. CONSTRUCT TEMPORARY SEDIMENT BASIN.
5. CONSTRUCT DIVERSION BERMS AND SWALES (WITH DITCH CHECKS) TO DIRECT SITE RUNOFF TO THE TEMPORARY SEDIMENT CONTROL PRACTICES. NOTE THAT TOPSOIL MAY BE USED TO BUILD INITIAL DIVERSION BERMS.
6. STRIP TOPSOIL AND ROUGH GRADE SITE. TOPSOIL STOCKPILES SHALL BE SEEDED AND STABILIZED IMMEDIATELY UPON COMPLETION. NOTE THAT ROUGH GRADING MAY OCCUR CONCURRENT WITH CONSTRUCTION OF THE DIVERSION BERMS AND SWALES. TOPSOIL AREAS AS THEY ARE BROUGHT TO FINAL GRADE.
7. INSTALL SANITARY SEWER. COMPLETE ALL TESTING AND CONTACT CITY PRIOR TO CONNECTING TO EXISTING SANITARY MAINS. NOTE THAT THIS STEP MAY BEGIN CONCURRENT WITH ROUGH GRADING ONCE THE UTILITY AREAS HAVE BEEN GRADED TO SUBGRADE.
8. INSTALL WATER MAIN. COMPLETE ALL TESTING AND CONTACT CITY PRIOR TO CONNECTING TO EXISTING WATER MAINS. NOTE THAT THIS STEP MAY BEGIN CONCURRENT WITH ROUGH GRADING.
9. INSTALL STORM SEWER AND ASSOCIATED EROSION CONTROL MEASURES PER EROSION CONTROL PLAN. NOTE THAT THIS STEP MAY BEGIN CONCURRENT WITH SANITARY SEWER AND WATER MAIN INSTALLATION.
10. FINISH GRADE THE SITE. NOTE THAT THIS STEP MAY OCCUR CONCURRENT WITH STORM SEWER INSTALLATION.
11. INSTALL STONE BASE COURSE, CONSTRUCT CURB & GUTTER AND SIDEWALK, AND PLACE BINDER COURSE PAVEMENT. NOTE THAT THIS STEP MAY BEGIN CONCURRENT WITH FINISH GRADING.
12. RESPREAD TOPSOIL AND PLACE SEED, MULCH, MATTING AND OTHER SITE STABILIZERS AS NEEDED. NOTE THAT THIS STEP MAY BEGIN CONCURRENT WITH FINISH GRADING AND ROAD CONSTRUCTION. ANY AREAS THAT ARE FINISH GRADED AND TOPSOILED SHALL BE SEEDED, MULCHED AND/OR MATTED IMMEDIATELY AFTER TOPSOIL IS PLACED.
13. REMOVE TEMPORARY SEDIMENT BASIN. REMOVE ALL ACCUMULATED SILT AT THIS TIME AND FINALIZE POND AND INFILTRATION BASIN PER PLAN.
14. LATE SEASON (AFTER OCTOBER 15) STABILIZATION NOTES:
    - 14.1. ALL AREAS THAT WILL REMAIN DISTURBED AFTER OCTOBER 15 MUST BE TEMPORARY SEEDED AS OF THAT DATE.
    - 14.2. ANY FINAL SITE STABILIZATION THAT OCCURS AFTER OCTOBER 15, CONTRACTOR MUST COVER DISTURBED AREAS WITH THE ANIONIC FORM OF POLYACRYLAMIDE (PAM), PER WDNR TECHNICAL STANDARD 1050 AND WisDOT PAL LIST. CONTRACTOR SHALL COORDINATE WITH VILLAGE ENGINEER AND WDNR FOR LATE SEASON STABILIZATION REQUIREMENTS.
15. SEEDING AND STABILIZATION SHALL BE PROVIDED FOR ANY AREAS THAT ARE NOT SUBSTANTIALLY VEGETATED.
16. REMOVE CONSTRUCTION EROSION CONTROL MEASURES AFTER SITE IS SUBSTANTIALLY VEGETATED AND ALL CONSTRUCTION IS COMPLETE.

EROSION CONTROL NOTES:

1. THE CONTRACTOR SHALL TAKE ALL MEASURES NECESSARY TO MINIMIZE EROSION, WATER POLLUTION AND SILTATION CAUSED BY CONSTRUCTION OF THIS PROJECT. EROSION CONTROL MEASURES SHALL BE IN ACCORDANCE WITH WISCONSIN DEPARTMENT OF NATURAL RESOURCES TECHNICAL STANDARDS.
2. EROSION CONTROL PLAN: PRIOR TO BEGINNING WORK, THE CONTRACTOR MAY BE REQUIRED TO SUBMIT AN EROSION AND SEDIMENT CONTROL PLAN, DETAILING SPECIFIC MEASURES THAT WILL BE USED IN THE VARIOUS STAGES OF CONSTRUCTION FOR APPROVAL BY THE ENGINEER.
3. IMPLEMENTATION: THE CONTRACTOR SHALL NOT BEGIN WORK UNTIL AFTER INITIAL EROSION AND SEDIMENT CONTROL DEVICES ARE IN PLACE AND APPROVED BY THE ENGINEER.
4. EROSION CONTROL MEASURES SHALL INCLUDE, BUT NOT BE LIMITED TO THE FOLLOWING:
   - A. DIVERT UPSTREAM RUNOFF FROM FLOWING THROUGH THE CONSTRUCTION SITE.
   - B. PROTECT DOWNSTREAM OR ADJACENT WATERWAYS AND WETLANDS WITH SILT FENCE.
   - C. DELAY STRIPPING TOPSOIL UNTIL REQUIRED FOR CONSTRUCTION.
   - D. PLACE SILT FENCE OR EROSION CONTROL BALES IN DITCHES AND OTHER DRAINAGE WAYS TO COLLECT SEDIMENT AND TO SLOW THE VELOCITY OF RUNOFF.
   - E. MAINTAIN EXISTING SEDIMENT BASIN AS DICTATED BY SITE CONDITIONS.
   - F. PROTECT STORM SEWER INLETS AND THE UPSTREAM END OF CULVERTS WITH SILT FENCE OR EROSION CONTROL BALES.
   - G. PROMPT REMOVAL OF EXCAVATED MATERIAL.
   - H. PROPER STORAGE OF BACKFILL AND BEDDING MATERIALS INCLUDING PLACING SILT FENCE OR EROSION CONTROL BALES ON THE DOWNSLOPE SIDES OF SPOIL PILES.
   - I. CONSTRUCTION OF TRACKING PAD TO CONSTRUCTION SITE TO PREVENT SEDIMENT FROM BEING TRACKED ONTO ROADWAYS.
   - J. PROMPT (SAME DAY) CLEANUP OF MATERIAL TRACKED ONTO ADJACENT STREETS.
   - K. TIMELY RESTORATION OF DAMAGE SURFACE AREAS.
   - L. ALL AREAS THAT WILL REMAIN DISTURBED AFTER OCTOBER 15, MUST BE TEMPORARY SEEDED AS OF THAT DATE.
5. TEMPORARY EROSION CONTROL MEASURES.
   - A. THE CONTRACTOR SHALL CONSTRUCT TEMPORARY EROSION CONTROL MEASURES, WHERE EROSION IS LIKELY TO BE A PROBLEM, PRIOR TO BEGINNING WORK ON THOSE SECTION(S) OF THE PROJECT. TEMPORARY EROSION CONTROL MEASURES SHALL BE MAINTAINED UNTIL AFTER PERMANENT EROSION CONTROL, SUCH AS SEEDING OR SODDING, HAS BEEN ESTABLISHED.
   - B. IN THE EVENT THE PERMANENT EROSION CONTROL MEASURES ARE NOT FULLY IMPLEMENTED IN CURRENT CONSTRUCTION SEASON, THE CONTRACTOR SHALL BE RESPONSIBLE FOR MAINTAINING ALL NECESSARY TEMPORARY EROSION CONTROL MEASURES UNTIL AFTER PERMANENT MEASURES HAVE BEEN COMPLETED IN THE FOLLOWING YEAR.
6. ALL DISTURBANCE AREAS THAT REMAIN INACTIVE FOR SEVEN DAYS OR LONGER SHALL RECEIVE TEMPORARY SEEDING.
7. TRENCH DEWATERING SHALL BE IN ACCORDANCE WITH WDNR TECHNICAL STANDARDS.
8. INSTALL SILT FENCE IN ACCORDANCE WITH WDNR TECHNICAL STANDARD DETAILS.
9. ALL RIP RAP AT PIPE OUTLETS SHALL BE 3'x5' MEDIUM RIP RAP OVER TYPE R FABRIC PER WDOT SPECIFICATIONS UNLESS OTHERWISE DESIGNATED.
10. EROSION CONTROL INSPECTION AND MAINTENANCE
    - A. INSPECT EROSION CONTROL MEASURES WEEKLY AND AFTER SITE RECEIVES 0.5" OF RAIN IN A 24-HOUR PERIOD DURING CONSTRUCTION.
    - B. REPAIR OR REPLACE EROSION CONTROLS THAT ARE DAMAGED OR FAILING.
11. ALL AREAS TO BE SEEDED AND MULCHED SHALL USE WDOT SEED MIXTURE NO. 20. MULCH SHALL APPLIED PER WDOT SPECIFICATIONS USING METHOD B FOR PLACEMENT.
12. DIVERSION BERMS SHALL BE CONSTRUCTED TO BLOCK AND REDIRECT RUNOFF AS INDICATED ON THE PLAN. SIDE SLOPES SHALL NOT EXCEED 2:1; TOP WIDTH SHALL BE 2' MIN.; BERM HEIGHT SHALL BE 1.5' MIN.
13. DUST CONTROL – CONTRACTOR SHALL PREVENT EXCESSIVE DUST FROM LEAVING THE CONSTRUCTION SITE THROUGH CONSTRUCTION PHASING AND TIMELY STABILIZATION OR THE USE OF BMPS SUCH AS SITE WATERING AND MULCH – ESPECIALLY WITH VERY DRY OR FINE SANDY SOILS.
14. 4-INCH DIAMETER x 6-FOOT LONG CEDAR POSTS SHALL USED TO MARK ISOLATED NATURAL RESOURCE LIMIT LINES AND WETLAND LINES IN AREAS OUTSIDE OF THE COUNTY OWNED LANDS.

LEGEND:

- EXISTING CONTOUR
- 817 – PROPOSED CONTOUR
- PROPOSED FLOW ARROW
- 817.00 – PROPOSED SPOT ELEVATION
- PROPOSED SILT FENCE
- PROPOSED INLET PROTECTION
- PROPOSED SILT SOCK
- PROPOSED TRACKING PAD

WISCONSIN DEPARTMENT OF NATURAL RESOURCES, CONSERVATION PRACTICE STANDARD:

1052 – NON-CHANNEL EROSION MAT
1055 – SEDIMENT BALE BARRIER (NON-CHANNEL)
1056 – SILT FENCE
1060 – STORM DRAIN INLET PROTECTION FOR CONST. SITES
1062 – DITCH CHECK
1057 – STONE TRACKING PAD AND TIRE WASHING
1058 – MULCHING FOR CONSTRUCTION SITES
1059 – TEMPORARY SEEDING
1061 – DE-WATERING
1064 – SEDIMENT BASIN

0 25 50 100

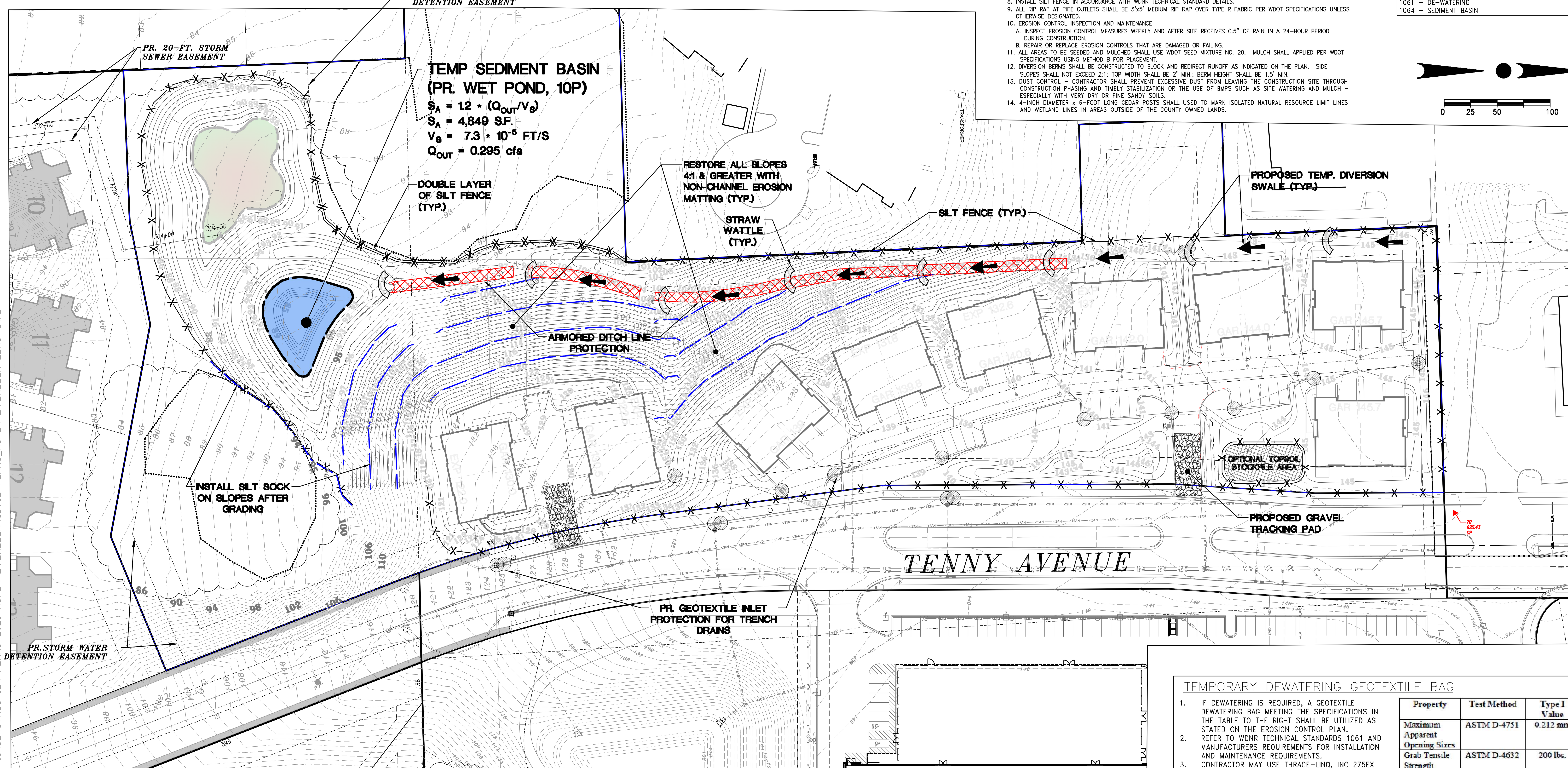

TEMPORARY DEWATERING GEOTEXTILE BAG

1. IF DEWATERING IS REQUIRED, A GEOTEXTILE DEWATERING BAG MEETING THE SPECIFICATIONS IN THE TABLE TO THE RIGHT SHALL BE UTILIZED AS STATED ON THE EROSION CONTROL PLAN.
2. REFER TO WDNR TECHNICAL STANDARDS 1061 AND MANUFACTURERS REQUIREMENTS FOR INSTALLATION AND MAINTENANCE REQUIREMENTS.
3. CONTRACTOR MAY USE THRACE-LINQ, INC 275EX GEOTEXTILE BAG, OR FUNCTIONAL EQUIVALENT TO MEET TECHNICAL STANDARD REQUIREMENTS.
4. CONTRACTOR MAY INSTALL HAY BALES AROUND DEWATERING BAG FOR STABILIZATION AS DICTATED BY SITE CONDITIONS.
5. MAX FLOW RATE SHALL NOT EXCEED 100GPM

Property	Test Method	Type I Value
Maximum Apparent Opening Sizes	ASTM D-4751	0.212 mm
Grab Tensile Strength	ASTM D-4632	200 lbs.
Mullen Burst	ASTM D-3786	350 psi
Permeability	ASTM D-4491	0.28 cm/sec
Fabric	Nominal Representative Weight	8 oz

CONTRACTOR IS REQUIRED TO CONTACT DIGGERS HOTLINE TOLL FREE TO OBTAIN LOCATION OF UNDERGROUND UTILITIES PRIOR TO COMMENCING THE WORK. WISCONSIN STATUTE 182.0715 REQUIRES MIN. OF 3 WORK DAYS NOTICE BEFORE YOU EXCAVATE.
CALL DIGGERS HOTLINE 1-800-242-8511

NOTE:
EXISTING UNDERGROUND UTILITY INFORMATION WAS OBTAINED FROM AVAILABLE RECORDS. THE ENGINEER MAKES NO GUARANTEE AS TO THE ACCURACY OF THIS INFORMATION. VERIFICATION TO THE SATISFACTION OF THE CONTRACTOR OF ALL UNDERGROUND UTILITIES, WHETHER OR NOT SHOWN ON THE PLANS, SHALL BE ASSUMED AS A CONDITION OF THE CONTRACT. THE CONTRACTOR SHALL NOTIFY THE ENGINEER OF ANY DISCREPANCIES BETWEEN LOCATION OF UTILITIES IN THE FIELD AND LOCATIONS SHOWN ON THE PLANS.

H:\C800\889\12011-01\CONSTRUCTION PLANS\2020-ASPEN OVERLOOK\CIVIL PLANS_ASPEN OVERLOOK-22X34.DWG

WISCONSIN JOSHUA D. PUDELKO E-39420 WAUWATOSA, WI PROFESSIONAL ENGINEER

TRIO DESIGN • LAND SURVEYING CIVIL ENGINEERING
12660 W. NORTH AVENUE, BLDG. "D"
BROOKFIELD, WI 53005
PHONE: (262) 790-1480
FAX: (262) 790-1481
EMAIL: jpudelko@trioeng.com

PROJECT:
ASPEN OVERLOOK
TENNY AVENUE (EXTENDED) & LES PAUL PARKWAY
WAUKESHA, WISCONSIN
CORNERSTONE DEVELOPMENT OF S.E. WI
N63 W23849 MAIN STREET
SUSSEX, WI 53089

REVISION HISTORY

DATE	DESCRIPTION
01/05/21	INITIAL SUBMITTAL
02/22/21	PER CITY COMMENTS

DATE: FEBRUARY 22, 2021

JOB NUMBER: 889-12011-01

DESCRIPTION: EROSION CONTROL PLAN

SHEET C3.0

SANITARY LATERAL SCHEDULE

DESC.	PIPE DESIGN	INVERT AT BLDG	INVERT AT MAIN	INVERT OF 8" MAIN
BLDG. 1 LAT.	54.5 LF ~ 6" SDR 35 PVC LAT. AT 4.40%	134.70	132.30	132.05
BLDG. 2 LAT.	71.6 LF ~ 6" SDR 35 PVC LAT. AT 3.35%	134.70	132.30	132.05
BLDG. 3 LAT.	67.9 LF ~ 6" SDR 35 PVC LAT. AT 2.08%	133.00	131.59	130.49
BLDG. 4 LAT.	69.8 LF ~ 6" SDR 35 PVC LAT. AT 3.69%	131.00	128.84	128.59
BLDG. 5 LAT.	72.5 LF ~ 6" SDR 35 PVC LAT. AT 2.08%	129.60	128.09	127.50
BLDG. 6 LAT.	65.2 LF ~ 6" SDR 35 PVC LAT. AT 2.08%	128.80	127.44	126.04
BLDG. 7 LAT.	84.3 LF ~ 6" SDR 35 PVC LAT. AT 2.08%	128.00	126.25	125.00

NOTE:
ALL MATERIALS SHALL BE APPROVED BY THE CITY OF WAUKESHA PUBLIC WORKS DEPARTMENT PRIOR TO INSTALLATION.

NOTE:
ALL SANITARY SEWER AND WATER MAIN SEWER TO BE INSTALLED IN ACCORDANCE WITH CITY OF WAUKESHA STANDARDS.

NOTE:
ALL APPLICATIONS AND FEES FOR UTILITIES MUST BE COMPLETED AND PAID PRIOR TO CONNECTION TO EXISTING UTILITIES.

NOTE:
ANY WORK IN THE RIGHT-OF-WAY AND ALL UTILITY CONNECTIONS TO BE INSPECTED BY THE CITY. NOTIFY CITY 72 HOURS IN ADVANCE OF CONNECTING TO SEWER.

SANITARY SEWER NOTES

SANITARY SEWER
- ALL 8" PVC SEWER PIPE SHALL MEET THE REQUIREMENTS SET FORTH IN SECTION 8.10.0 (SSSWCW).
- ALL SANITARY MANHOLES SHALL BE 48" DIA. WITH A NEENAH R-1661 FRAME AND SELF-SEALING LID (NON LOCKING TYPE) WITH NO VENT HOLES AND MEET THE REQUIREMENTS SET FORTH IN SSSWCW.
- SDR-35 PVC PIPE SHALL BE USED FOR SANITARY SEWERS LESS THAN 16 FEET DEEP.
- C-900 PVC PRESSURE PIPE SHALL BE USED FOR SANITARY SEWERS DEEPER THAN 16 FEET.
- MAPLE HEART BOARDS SHALL BE PROVIDED AT ALL SANITARY SEWER LATERAL END CONNECTIONS
- ALL SEWERS, LEADS, AND LATERALS SHALL BE TELEVISED WITH THE PROJECT AND/OR DISTURBED AREA LIMITS BY AN INDEPENDENT TELEVISING INSPECTION SERVICE. TELEVISING SHALL BE IN ACCORDANCE WITH DIVISION 3, STANDARD CONSTRUCTION SPECIFICATIONS, SECTION 5.3.10

TRACER WIRE NOTE
- CONTRACTOR SHALL INSTALL PLASTIC COATED TRACER WIRE (10 TO 14 GAUGE SOLID COPPER, OR COPPER COATED STEEL WIRE) PER COMM 82.30(11)(H). PLASTIC WIRE MAY BE TAPED TO PLASTIC DRAIN PIPE. IF ATTACHED, THE TRACER SHALL BE SECURED EVERY 6 TO 20 FEET AND AT ALL BENDS. TRACER WIRE SHALL HAVE ACCESS POINTS AT LEAST EVERY 300 FEET.

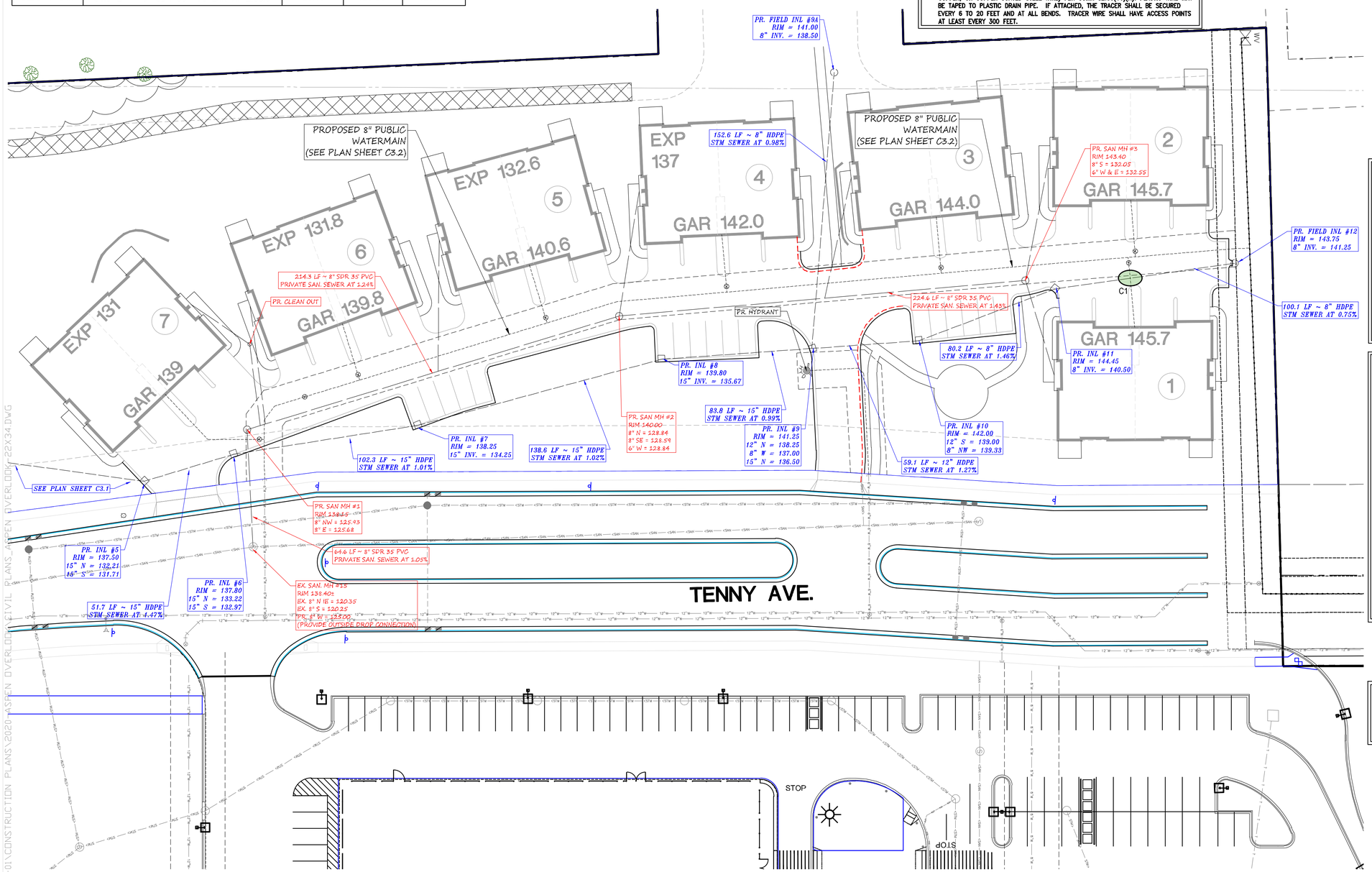

LEGEND:

- EXISTING CONTOUR
- SAN — EXISTING SANITARY SEWER
- EXISTING SANITARY MANHOLE
- W — EXISTING WATER MAIN
- EXISTING HYDRANT
- ST — EXISTING STORM SEWER
- EXISTING STORM MANHOLE
- EXISTING STORM INLET
- EXISTING TRANSFORMER
- EXISTING ELECTRIC PEDESTAL
- EXISTING TELEPHONE PEDESTAL
- EXISTING CATV PEDESTAL
- EXISTING POWER POLE
- PROPOSED SANITARY SEWER
- PROPOSED SANITARY MANHOLE
- PROPOSED WATER MAIN
- PROPOSED HYDRANT
- PROPOSED WATER VALVE
- PROPOSED STORM SEWER
- PROPOSED STORM MANHOLE
- PROPOSED STORM INLET
- PROPOSED STORM END SECTION

WATER MAIN NOTES

CONTACT WAUKESHA WATER UTILITY AT (262) 521-5272

WATERMAIN
- ALL 8" WATERMAIN CONSTRUCTED AS PART OF THIS PLAN SHALL BE PVC, C-900, CLASS 150 (DR-18).
- PVC PIPE SHALL HAVE PUSH-ON JOINTS WITH RUBBER GASKET.
- HYDRANTS SHALL BE SET AT 2 FT. BEHIND THE BACK OF CURB, WITH THE NOZZLE ELEVATION 20 INCHES ABOVE TOP OF CURB.
- ANCHOR TEES SHALL BE USED FOR EACH HYDRANT BRANCH.
- ALL WATERMAINS (AND SERVICES) CALLED FOR ON THESE PLANS ARE TO BE INSTALLED WITH CLASS "B" BEDDING AS SPECIFIED IN CH. 4.3.0, LAYING OF WATERMAIN, AND FILE NO. 36, PART VII (SSSWCW).

TRACER WIRE NOTE
- CONTRACTOR SHALL INSTALL PLASTIC COATED TRACER WIRE (10 TO 14 GAUGE SOLID COPPER, OR COPPER COATED STEEL WIRE) PER COMM 82.30(11)(H). PLASTIC WIRE MAY BE TAPED TO PLASTIC PIPE. IF ATTACHED, THE TRACER SHALL BE SECURED EVERY 6 TO 20 FEET AND AT ALL BENDS. TRACER WIRE SHALL HAVE ACCESS POINTS AT LEAST EVERY 300 FEET.

STORM SEWER NOTES

STORM SEWER
- ALL PUBLIC STORM SEWER SHALL BE RCP (REINFORCED CONCRETE PIPE) WITH GASKETED JOINTS.
- STORM SEWER SHALL BE R.C.P. MEETING SECTION 8.6.0 (SSSWCW) AND BE RUBBER GASKETED MEETING THE REQUIREMENTS SET FORTH IN WSWS CHAPTER 6.6.0.
- PIPE CLASSES:
  12" DIA. RCP STORM SEWER SHALL BE CL-V
  15" DIA. RCP STORM SEWER SHALL BE CL-IV
  18" & ABOVE DIA. RCP STORM SEWER SHALL BE CL-III
- STORM MANHOLES SHALL BE 48" DIAMETER PRECAST CONCRETE FOR STORM MAINS OF 24" DIAMETER OR SMALLER WITH NEENAH R-1660 FRAMES & COVERS WITH 6 VENT HOLES.
- STORM MANHOLES IN EASEMENTS SHALL USE NEENAH R-1660 FRAMES WITH TYPE C GRATES.
- CATCH BASINS SHALL HAVE 24" SUMPS AND SHALL CONFORM TO FILE NO. 26 OF THE STANDARD SPECIFICATIONS WITH A NEENAH R-3067-C FOR VERTICAL CURB APPLICATIONS.
- FIELD INLETS USE A NEENAH R-2560-D8 TYPE BEEHIVE CASTING.
- ALL SEWERS, LEADS, AND LATERALS SHALL BE TELEVISED WITH THE PROJECT AND/OR DISTURBED AREA LIMITS BY AN INDEPENDENT TELEVISING INSPECTION SERVICE. TELEVISING SHALL BE IN ACCORDANCE WITH DIVISION 3, STANDARD CONSTRUCTION SPECIFICATIONS, SECTION 5.3.10

TRACER WIRE NOTE
- CONTRACTOR SHALL INSTALL PLASTIC COATED TRACER WIRE (10 TO 14 GAUGE SOLID COPPER, OR COPPER COATED STEEL WIRE) PER COMM 82.30(11)(H). PLASTIC WIRE MAY BE TAPED TO PLASTIC PIPE. IF ATTACHED, THE TRACER SHALL BE SECURED EVERY 6 TO 20 FEET AND AT ALL BENDS. TRACER WIRE SHALL HAVE ACCESS POINTS AT LEAST EVERY 300 FEET.

UTILITY CROSSING TABLE:

C1 – GROUND ELEV. = 145.10±
BOT INV. OF PR. 8" STM SEWER = 140.81
TOP INV. OF PR. 6" WAT LATERAL = 139.10 (MAX.)

0 15 30 60

CONTRACTOR IS REQUIRED TO CONTACT DIGGERS HOTLINE TOLL FREE TO OBTAIN LOCATION OF UNDERGROUND UTILITIES PRIOR TO COMMENCING THE WORK. WISCONSIN STATUTE 182.0715 REQUIRES MIN. OF 3 WORK DAYS NOTICE BEFORE YOU EXCAVATE.
CALL DIGGERS HOTLINE 1-800-242-8511

NOTE:
EXISTING UNDERGROUND UTILITY INFORMATION WAS OBTAINED FROM AVAILABLE RECORDS. THE ENGINEER MAKES NO GUARANTEE AS TO THE ACCURACY OF THIS INFORMATION. VERIFICATION TO THE SATISFACTION OF THE CONTRACTOR OF ALL UNDERGROUND UTILITIES, WHETHER OR NOT SHOWN ON THE PLANS, SHALL BE ASSUMED AS A CONDITION OF THE CONTRACT. THE CONTRACTOR SHALL NOTIFY THE ENGINEER OF ANY DISCREPANCIES BETWEEN LOCATION OF UTILITIES IN THE FIELD AND LOCATIONS SHOWN ON THE PLANS.

COMPACTION NOTE

- THE DEVELOPER SHALL CONTRACT WITH A SOIL TESTING FIRM TO PERFORM COMPACTION TESTING ON TRENCHES FOR ALL PROJECTS. THE DEVELOPER WILL BE REQUIRED TO MEET A MINIMUM COMPACTION OF 90% STANDARD PROCTOR DENSITY IN THE BOTTOM 3 FEET AND A MINIMUM COMPACTION OF 95% STANDARD PROCTOR DENSITY IN THE TOP 3 FEET OF THE EXCAVATED MATERIAL ON GRANULAR BACKFILL.

BACKFILL NOTES

TRENCH BACKFILL
- BACKFILL FOR ALL TRENCHES SHALL BE 1 1/4" CRUSHED LIMESTONE TB (SECTION 305.2.2.1 OF THE WISDOT STD. SPECIFICATIONS FOR HIGHWAY AND STRUCTURE CONSTRUCTION) UNLESS OTHERWISE NOTED IN THE PROFILE OR IN THE PROJECT SPECIFICATION.

WISCONSIN JOSHUA D. PUDELKO E-39-PCL WAUWATOSA, WI PROFESSIONAL ENGINEER

TRIO DESIGN • LAND SURVEYING • CIVIL ENGINEERING
12660 W. NORTH AVENUE, BLDG. "D"
BROOKFIELD, WI 53005
PHONE: (262) 790-1480
FAX: (262) 790-1481
EMAIL: jpudelko@trioeng.com

PROJECT:
ASPEN OVERLOOK
TENNY AVENUE (EXTENDED) & LES PAUL PARKWAY
WAUKESHA, WISCONSIN
CORNERSTONE DEVELOPMENT OF S.E. WI
N63 W23849 MAIN STREET
SUSSEX, WI 53089

REVISION HISTORY

DATE	DESCRIPTION
01/05/21	INITIAL SUBMITTAL
02/22/21	PER CITY COMMENTS

DATE:
FEBRUARY 22, 2021

JOB NUMBER:
889-12011-01

DESCRIPTION:
UTILITY PLAN (NORTH)

SHEET
C4.0

H:\C800\889\12011-01\CONSTRUCTION PLANS\2020-ASPEN OVERLOOK CIVIL PLANS_ASPEN OVERLOOK-P22X34.DWG

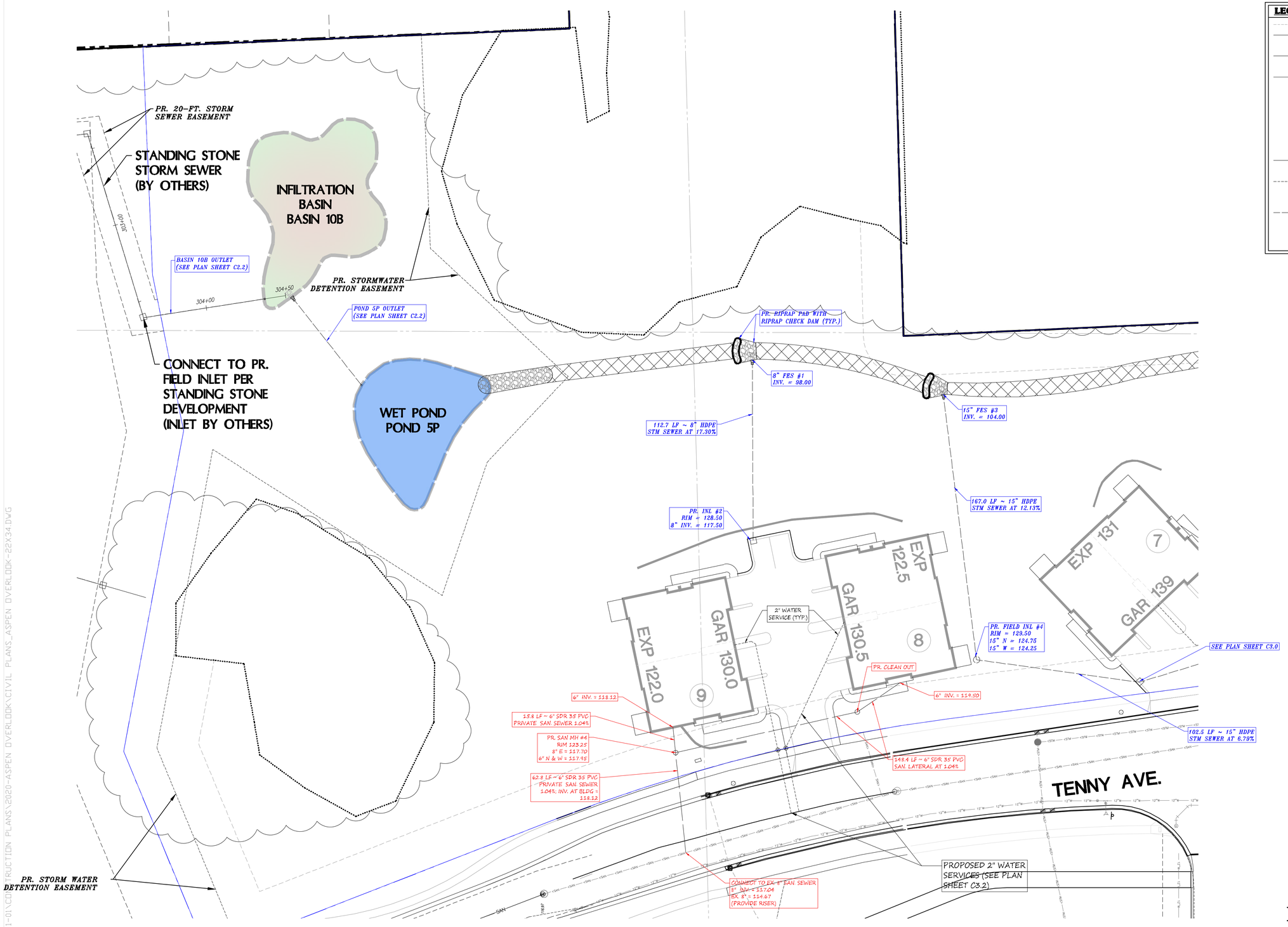

LEGEND:

- EXISTING CONTOUR
- SAN — EXISTING SANITARY SEWER
- EXISTING SANITARY MANHOLE
- W — EXISTING WATER MAIN
- EXISTING HYDRANT
- ST — EXISTING STORM SEWER
- EXISTING STORM MANHOLE
- EXISTING STORM INLET
- EXISTING TRANSFORMER
- EXISTING ELECTRIC PEDESTAL
- EXISTING TELEPHONE PEDESTAL
- EXISTING CATV PEDESTAL
- EXISTING POWER POLE
- PROPOSED SANITARY SEWER
- PROPOSED SANITARY MANHOLE
- PROPOSED WATER MAIN
- PROPOSED HYDRANT
- PROPOSED WATER VALVE
- PROPOSED STORM SEWER
- PROPOSED STORM MANHOLE
- PROPOSED STORM INLET
- PROPOSED STORM END SECTION

CONTRACTOR IS REQUIRED TO CONTACT DIGGERS HOTLINE TOLL FREE TO OBTAIN LOCATION OF UNDERGROUND UTILITIES PRIOR TO COMMENCING THE WORK. WISCONSIN STATUTE 182.0715 REQUIRES MIN. OF 3 WORK DAYS NOTICE BEFORE YOU EXCAVATE.
CALL DIGGERS HOTLINE 1-800-242-8511

NOTE:
EXISTING UNDERGROUND UTILITY INFORMATION WAS OBTAINED FROM AVAILABLE RECORDS. THE ENGINEER MAKES NO GUARANTEE AS TO THE ACCURACY OF THIS INFORMATION. VERIFICATION TO THE SATISFACTION OF THE CONTRACTOR OF ALL UNDERGROUND UTILITIES, WHETHER OR NOT SHOWN ON THE PLANS, SHALL BE ASSUMED AS A CONDITION OF THE CONTRACT. THE CONTRACTOR SHALL NOTIFY THE ENGINEER OF ANY DISCREPANCIES BETWEEN LOCATION OF UTILITIES IN THE FIELD AND LOCATIONS SHOWN ON THE PLANS.

WISCONSIN PROFESSIONAL ENGINEER
JOSHUA D. PUDELKO
E-39-PEL
WAUWATOSA, WI

TRIO DESIGN • LAND SURVEYING • CIVIL ENGINEERING
12660 W. NORTH AVENUE, BLDG. "D"
BROOKFIELD, WI 53005
PHONE: (262) 790-1480
FAX: (262) 790-1481
EMAIL: jpudelko@trioeng.com

PROJECT:
ASPEN OVERLOOK
TENNY AVENUE (EXTENDED) & LES PAUL PARKWAY
WAUKESHA, WISCONSIN
CORNERSTONE DEVELOPMENT OF S.E. WI
N63 W23849 MAIN STREET
SUSSEX, WI 53089

REVISION HISTORY

DATE	DESCRIPTION
01/05/21	INITIAL SUBMITTAL
02/22/21	PER CITY COMMENTS

DATE:
FEBRUARY 22, 2021

JOB NUMBER:
889-12011-01

DESCRIPTION:
UTILITY PLAN (SOUTH)

SHEET
C4.1

H:\C800\889\12011-01\CONSTRUCTION PLANS\2020-ASPEN OVERLOOK\CIVIL PLANS_ASPEN OVERLOOK-22X34.DWG

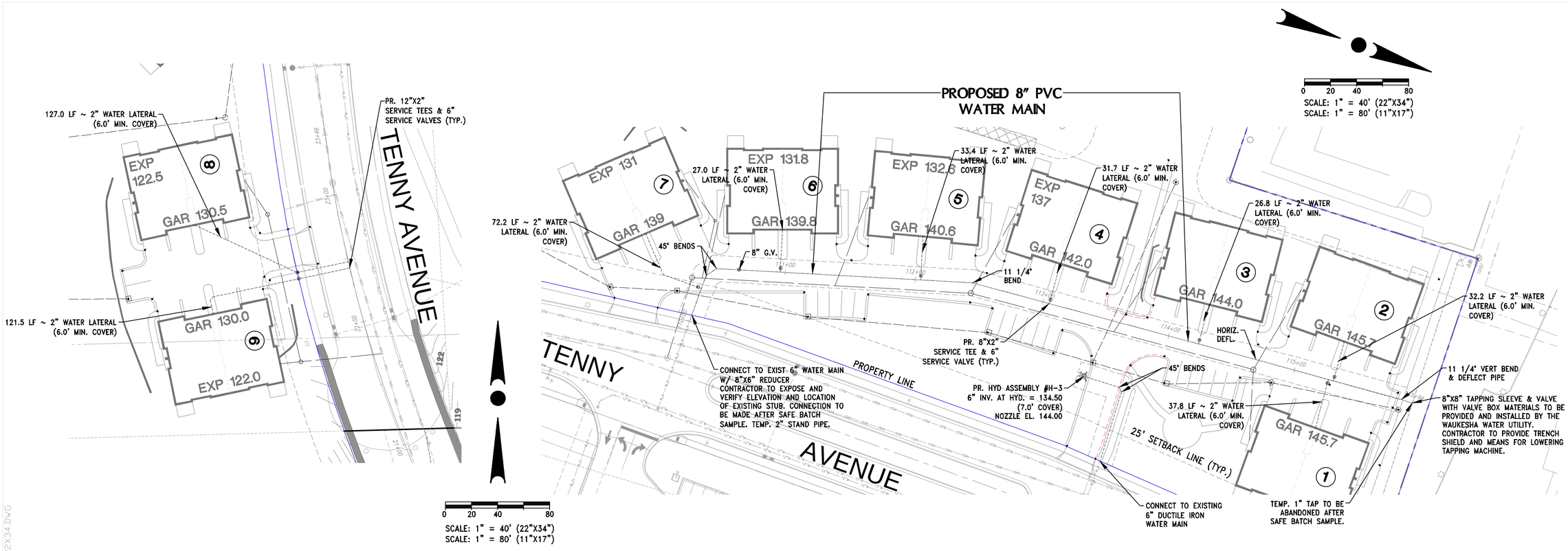

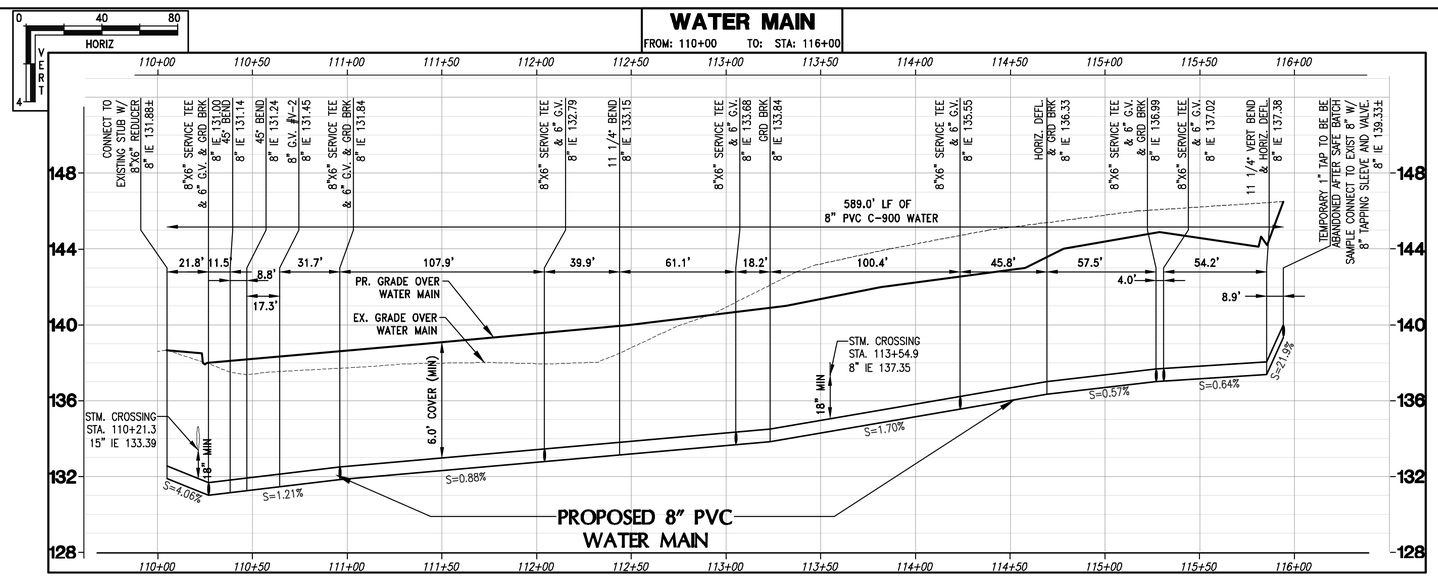

NOTE:
- EXISTING VALVES SHALL BE OPERATED ONLY BY WAUKESHA WATER UTILITY PERSONNEL AND THE CONTRACTOR SHALL PROVIDE 24 HOURS' NOTICE FOR THIS ACTIVITY.
- ALL MATERIAL SUBMITTALS SHALL BE PROVIDED TO AND APPROVED BY WAUKESHA WATER UTILITY PRIOR TO CONSTRUCTION.

WATER MAIN NOTES

WATERMAIN
- ALL PVC WATERMAIN CONSTRUCTED AS PART OF THIS PLAN SHALL BE PVC, C-900, CLASS 150 (DR18), UNLESS OTHERWISE NOTED. PVC PIPE SHALL HAVE PUSH-ON JOINTS WITH RUBBER GASKET.
- HYDRANTS SHALL BE SET AT 3 FT. BEHIND THE BACK OF CURB.
- HYDRANT LEADS SHALL BE DUCTILE IRON CL-52
- ALL WATERMAINS (AND SERVICES) CALLED FOR ON THESE PLANS ARE TO BE INSTALLED WITH CLASS "B" BEDDING AS SPECIFIED IN CH. 4.3.0, LAYING OF WATERMAIN, AND FILE NO. 36, PART VII (SSSWCW).

TRACER WIRE NOTE
- CONTRACTOR SHALL INSTALL PLASTIC COATED TRACER WIRE (12 GAUGE SOLID COPPER, OR COPPER COATED STEEL WIRE) PER COMM 82.30(11)(H). PLASTIC WIRE MAY BE TAPED TO PLASTIC PIPE. IF ATTACHED, THE TRACER SHALL BE SECURED EVERY 6 TO 20 FEET AND AT ALL BENDS. TRACER WIRE SHALL HAVE ACCESS POINTS AT LEAST EVERY 300 FEET.

CONTRACTOR IS REQUIRED TO CONTACT DIGGERS HOTLINE TOLL FREE TO OBTAIN LOCATION OF UNDERGROUND UTILITIES PRIOR TO COMMENCING THE WORK. WISCONSIN STATUTE 182.0715 REQUIRES MIN. OF 3 WORK DAYS NOTICE BEFORE YOU EXCAVATE.
CALL DIGGERS HOTLINE 1-800-242-8511

NOTE:
EXISTING UNDERGROUND UTILITY INFORMATION WAS OBTAINED FROM AVAILABLE RECORDS. THE ENGINEER MAKES NO GUARANTEE AS TO THE ACCURACY OF THIS INFORMATION. VERIFICATION TO THE SATISFACTION OF THE CONTRACTOR OF ALL UNDERGROUND UTILITIES, WHETHER OR NOT SHOWN ON THE PLANS, SHALL BE ASSUMED AS A CONDITION OF THE CONTRACT. THE CONTRACTOR SHALL NOTIFY THE ENGINEER OF ANY DISCREPANCIES BETWEEN LOCATION OF UTILITIES IN THE FIELD AND LOCATIONS SHOWN ON THE PLANS.

WISCONSIN PROFESSIONAL ENGINEER JOSHUA D. PUDELKO E-32-PE WAUWATOSA, WI

TRIO DESIGN • LAND SURVEYING • CIVIL ENGINEERING
12660 W. NORTH AVENUE, BLDG. "D"
BROOKFIELD, WI 53005
PHONE: (262) 790-1480
FAX: (262) 790-1481
EMAIL: jpudelko@trioeng.com

PROJECT:
ASPEN OVERLOOK
TENNY AVENUE (EXTENDED) & LES PAUL PARKWAY
WAUKESHA, WISCONSIN
CORNERSTONE DEVELOPMENT OF S.E. WI
N63 W23849 MAIN STREET
SUSSEX, WI 53089

REVISION HISTORY

DATE	DESCRIPTION
01/05/21	INITIAL SUBMITTAL
02/22/21	PER CITY COMMENTS

DATE: FEBRUARY 22, 2021

JOB NUMBER: 889-12011-01

DESCRIPTION: WATER MAIN PLAN AND PROFILE

SHEET

C4.2

H:\C800\889\12011-01\CONSTRUCTION PLANS\2020-ASPEN OVERLOOK\CIVIL PLANS_ASPEN OVERLOOK UTILITIES-22X34.DWG

COMPLIANT DOCUMENTATION:

THE LATEST EDITIONS OF THE FOLLOWING DOCUMENTS AND ANY SUPPLEMENTS THERETO, SHALL GOVERN ALL CONSTRUCTION ITEMS ON THIS PLAN UNLESS OTHERWISE NOTED.

-STANDARD SPECIFICATIONS FOR SEWER AND WATER CONSTRUCTION IN WISCONSIN, 6TH EDITION (SSSWCW)
-THE WISCONSIN D.O.T. STANDARD SPECIFICATIONS FOR HIGHWAY AND STRUCTURE CONSTRUCTION, LATEST EDITION
-WDNR STORMWATER RUNOFF TECHNICAL STANDARDS.
-WISDOT PAL APPROVED EROSION CONTROL MEASURES LIST, LATEST EDITION.
-CITY OF WAUKESHA DEVELOPMENT STANDARDS, LATEST EDITION.

CONTRACTOR RESPONSIBILITY:

-EXISTING UNDERGROUND UTILITY INFORMATION WAS OBTAINED FROM AVAILABLE RECORDS AND FIELD SURVEY. THE ENGINEER MAKES NO GUARANTEE AS TO THE ACCURACY OF THIS INFORMATION. VERIFICATION TO THE SATISFACTION OF THE CONTRACTOR OF ALL UNDERGROUND UTILITIES, WHETHER OR NOT SHOWN ON THE PLANS, SHALL BE ASSUMED AS A CONDITION OF THE CONTRACT. THE CONTRACTOR SHALL NOTIFY THE ENGINEER OF ANY DISCREPANCIES BETWEEN LOCATION OF UTILITIES IN THE FIELD AND LOCATIONS SHOWN ON THE PLANS.

-THE LOCATION, SUPPORT, PROTECTION AND RESTORATION OF ALL EXISTING UTILITIES AND APPURTENANCES SHALL BE THE RESPONSIBILITY OF THE CONTRACTOR AND SHALL BE INCLUDED IN THE UNIT PRICE BID FOR THE VARIOUS ITEMS.

-THE CONTRACTOR SHALL BE SOLELY RESPONSIBLE FOR COMPLYING WITH ALL APPLICABLE FEDERAL, STATE AND LOCAL SAFETY REQUIREMENTS TOGETHER WITH EXERCISING PRECAUTIONS AT ALL TIMES FOR THE PROTECTION OF PERSONS (INCLUDING EMPLOYEES) AND PROPERTY. IT IS ALSO THE RESPONSIBILITY OF THE CONTRACTOR AND SUB-CONTRACTOR(S) TO INITIATE, MAINTAIN AND SUPERVISE ALL SAFETY REQUIREMENTS, PRECAUTIONS AND PROGRAMS IN CONNECTION WITH THIS WORK. THE CONTRACTOR SHALL ALSO BE SOLELY RESPONSIBLE FOR ALL REQUIRED PERMITS, UNLESS OTHERWISE SPECIFIED.

-THE CONTRACTOR SHALL NOTIFY THE DESIGN ENGINEER AS CONSTRUCTION ACTIVITIES ARE COMPLETED TO PROVIDE CONSTRUCTION OVERSIGHT AND INSPECTION IN ACCORDANCE WITH THE COSTRUCTION INSPECTION PLAN.

-THE OWNER WILL PROVIDE ALL SURVEYING AND CONSTRUCTION STAKING FOR THIS CONTRACT. THE CONTRACTOR SHALL EXERCISE CARE AND DILIGENCE IN PROTECTING THE SAME. ANY EXPENSE INCURRED FOR ADDITIONAL RESTAKING CAUSED BY CONTRACTOR'S NEGLECT MAY BE CHARGED TO THE CONTRACTOR AND DEDUCTED FROM THE SUMS DUE HIM UNDER THIS CONTRACT.

-ALL TRENCHES SHALL BE BACKFILLED OR SECURELY PLATED DURING NON-WORKING HOURS.

-CONTRACTOR SHALL BE PREPARED FOR DEWATERING CONDITIONS BY HAVING APPROPRIATE PUMPS AND FILTER BAGS ONSITE FOR DEWATERING AND REMOVAL OF ALL SEDIMENT PER CITY, COUNTY AND WDNR REQUIREMENTS PER TECHNICAL STANDARD 1061.

TRAFFIC CONTROL:

-PUBLIC ROADS SHALL NOT BE FULLY CLOSED TO TRAFFIC AT ANY TIME. ALL INGRESS AND EGRESS TRAFFIC TO THE PROJECT SHALL BE LIMITED TO THE GRAVEL ENTRANCE TO THE PROPERTY.

CONSTRUCTION NOTES:

1. ALL WORK SHALL BE IN ACCORDANCE WITH THE STANDARD SPECIFICATIONS FOR HIGHWAY AND STRUCTURE CONSTRUCTION, STATE OF WISCONSIN, LATEST EDITION, UNLESS OTHERWISE CALLED FOR ON THE PLANS, SPECIFICATIONS OR SPECIAL PROVISIONS.
2. ALL EROSION CONTROL MEASURES SPECIFIED ON THIS PLAN SHALL MEET THE DESIGN CRITERIA, STANDARDS AND SPECIFICATIONS AS SET FORTH IN THE DEPARTMENT OF NATURAL RESOURCES WISCONSIN BEST MANAGEMENT PRACTICE HANDBOOK AND TECHNICAL STANDARDS.
3. ALL EROSION CONTROL DEVICES (I.E., SILT FENCE, SILT SOCK, GRAVEL ENTRANCE, SILTATION BASIN, ETC.), SHALL BE INSTALLED PRIOR TO COMMENCING ANY GRADING OR UTILITY CONSTRUCTION. GRADING ASSOCIATED WITH INSTALLATION OF EROSION OR SEDIMENTARY PRACTICES MAY OCCUR CONCURRENTLY WITH INSTALLATION OF PRACTICES.
4. ALL ACTIVITIES ON THE SITE SHALL BE CONDUCTED IN A LOGICAL SEQUENCE TO MINIMIZE THE AREA OF BARE SOIL EXPOSED AT ANY ONE TIME. REFER TO THE CONSTRUCTION SEQUENCING PLAN FOR ADDITIONAL INFORMATION.
5. THE OWNER IS RESPONSIBLE FOR OBTAINING A GRADING AND/OR EROSION CONTROL PERMIT (OR ANY OTHER APPLICABLE PERMITS) PRIOR TO CONSTRUCTION.
6. THE CONTRACTOR SHALL NOTIFY DIGGERS HOTLINE, ALL TOWN UTILITY DEPARTMENTS, AND GOVERNMENT UNITS WHOSE PROPERTY MAY BE AFFECTED BY THE CONTRACTOR'S OPERATIONS AT LEAST THREE (3) DAYS BEFORE BREAKING GROUND. DIGGERS HOTLINE NUMBER IS 1-800-242-8511.
7. CONTRACTOR SHALL BE RESPONSIBLE FOR MAINTAINING THE CLEANLINESS OF THE PROJECT AND PUBLIC ROADWAYS DURING CONSTRUCTION PER THE REQUIREMENTS SET FORTH BY THE LOCAL AND COUNTY AGENCIES. STREETS SHALL BE KEPT FREE OF SILT OR DIRT TRACKED FROM AREAS UNDER CONSTRUCTION BY SWEEPING OR OTHER APPROPRIATE MEASURES. DUST GENERATED BY CONSTRUCTION ACTIVITIES SHALL BE MINIMIZED BY USE OF WATERING, CALCIUM CHLORIDE SURFACE TREATMENT, CONSTRUCTION SCHEDULING OR OTHER APPROPRIATE METHODS.
8. INLETS SHALL BE PROTECTED WITH AN EROSION BARRIER MEETING WDNR TECHNICAL STANDARD 1060 UNTIL THE AREA HAS BEEN STABILIZED. FREQUENT INSPECTION AND TIMELY MAINTENANCE IS REQUIRED.
9. UPON COMPLETION OF THE WORK AS SPECIFIED, RESPREAD A MINIMUM OF FOUR (4") INCHES OF SALVAGED TOPSOIL OVER ALL DISTURBED AREAS AND PROVIDE SEED, FERTILIZER AND MULCH PER THE STANDARD SPECIFICATIONS.
10. ALL DISTURBED AREAS SHALL BE REVEGATATED WITHIN SEVEN DAYS AFTER BEING DISTURBED USING THE SEED MIX SPECIFIED ON THE PLANS.
11. ALL EROSION CONTROL DEVICES SHALL BE ROUTINELY INSPECTED EVERY SEVEN DAYS AND WITHIN 24 HOURS OF A RAINFALL GREATER THAN 0.5 INCHES. CONTRACTOR IS REQUIRED TO PERFORM INSPECTIONS, KEEP A LOG, AND REPAIR BMP'S AS NEEDED.
12. REFER TO EROSION CONTROL PLAN FOR SITE EROSION CONTROL ELEMENTS, REQUIREMENTS.

H:\C800\889\12011-01\CONSTRUCTION PLANS\2020-ASPEN OVERLOOK\CIVIL PLANS_ASPEN OVERLOOK-22X34.DWG

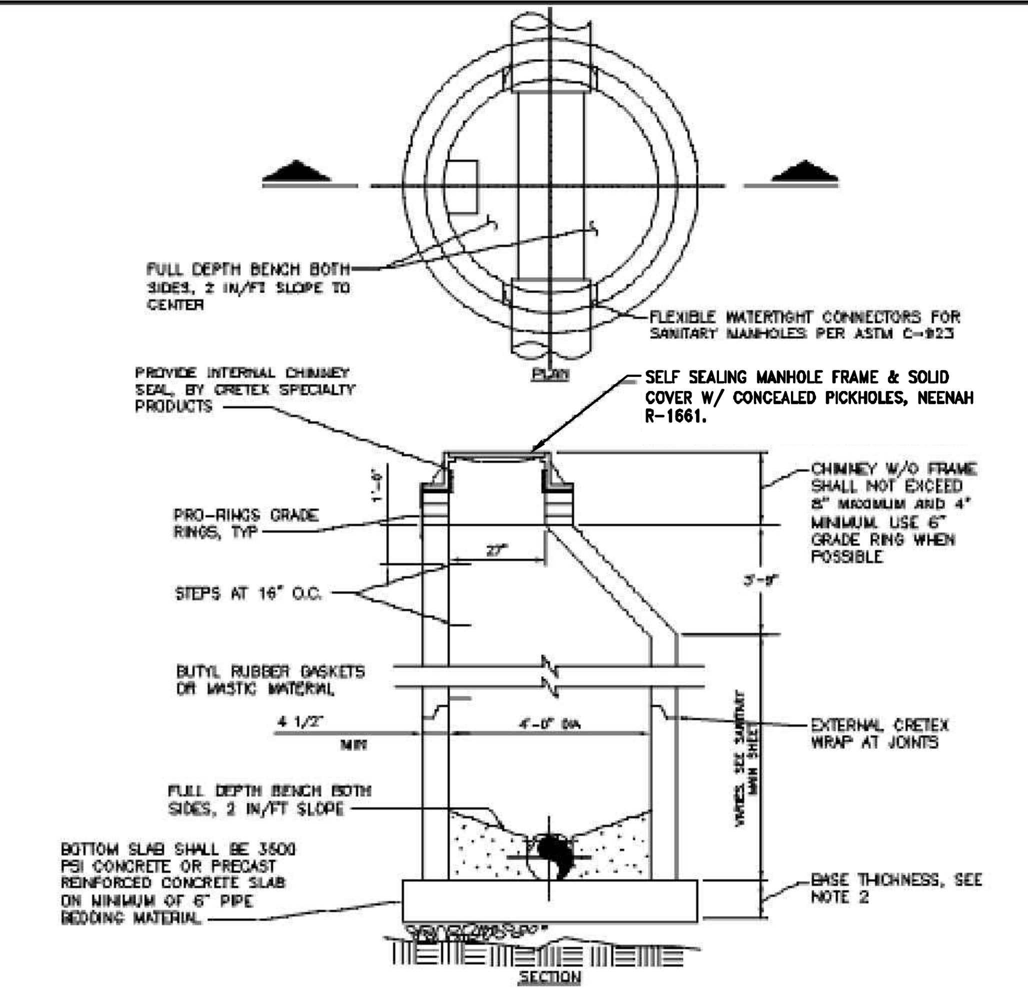

NOTES:
1. MANHOLE SECTIONS, BASES, AND TOP SLABS SHALL BE PRECAST REINFORCED CONCRETE CONSTRUCTED IN ACCORDANCE WITH ASTM C-478
2. THE BASE THICKNESS SHALL BE 8-INCHES FOR DEPTHS 10 FEET OR LESS AND 12-INCHES FOR DEPTHS OVER 10 FEET.
3. JOINTS BETWEEN MANHOLE SECTIONS SHALL BE TONGUE AND GROOVE WITH COMPRESSION TYPE RUBBER GASKET CONFORMING TO ASTM C443 OR/AND APPROVED BITUMINOUS MATERIAL.
4. THE INVERT CHANNEL SHALL BE TROWELED SMOOTH, DENSE SURFACE AND A SEMICIRCLE SHAPE CONFORMING TO THE INSIDE OF THE ADJACENT SEWER SECTIONS.
5. ALL PIPE SHALL BE GROUTED IN-PLACE INTO NEW MANHOLE WALLS. PROVIDE A WATERTIGHT, FLEXIBLE SEAL BETWEEN PIPE AND MANHOLE. CONNECTORS SHALL BE MANUFACTURED BY A-LOK PRODUCTS, INC. OR EQUAL AND SHALL BE INSTALLEDIN ACCORDANCE WITH MANUFACTURER'S RECOMMENDATIONS.
6. MANHOL CASTINGS SHALL BE NEENAH R-1661 FRAME AND SELF-SEALING SOUND COVER WITH CONCEALED PICK-HOLES.
7. ALL NNULAR SPACES SHALL BE FILLED WITH A MASTICE OR CEMENTITIOUS FILLER.

CITY OF WAUKESHA — DEPARTMENT OF PUBLIC WORKS
STANDARD CONSTRUCTION DETAILS --SANITARY MANHOLE--
APPROVED: ALEX DAMIEN DATE: / APPROVED: DATE: / DRAWN BY: DSB DATE: / CHECKED BY: DATE:
PLOT SCALE: 0.716063 / PLOT DATE: 11/21/2017 7:35 AM
DETAIL NUMBER: 05-0001 / PROJECT NO:

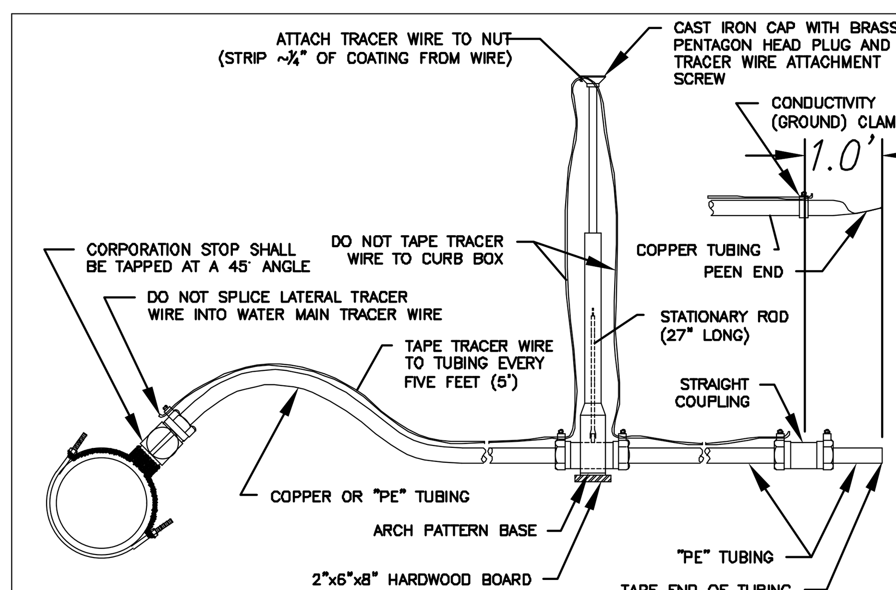

WATER SERVICE LATERALS
COPPER TUBING 1" TO 2" (TYPE "K") OR POLYETHYLENE (PE) TUBING 1¼" TO 2" (CTS)
FIGURE 1

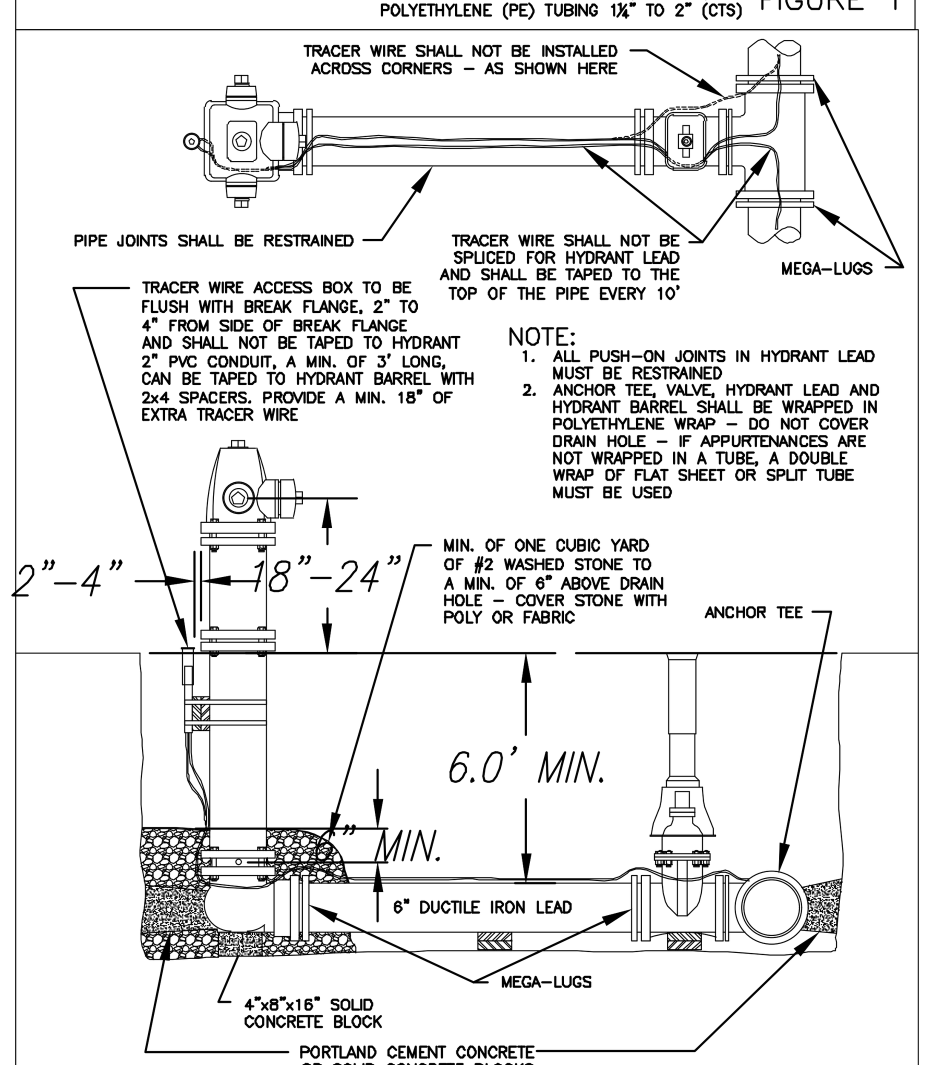

NOTE:
THE CONTRACTOR IS RESPONSIBLE FOR INSTALLING THE HYDRANT WITHOUT ANY DEFECTS IN THE COATING (PAINT) INCLUDING SCRATCHES, CHIPS OR RUST. ANY DEFECTS FOUND IN THE COATING (PAINT), THE CONTRACTOR SHALL REPAINT THE HYDRANT(S) PER THE WAUKESHA WATER UTILITY'S HYDRANT REPAINTING SPECIFICATION.

STANDARD HYDRANT INSTALLATION
FIGURE 2

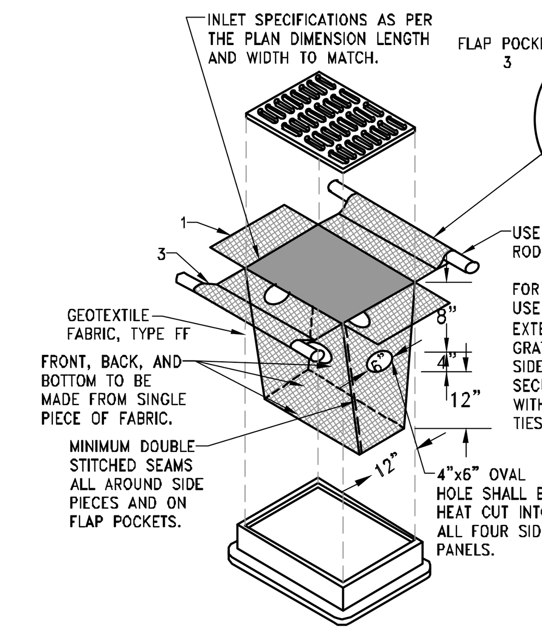

INLET PROTECTION, TYPE D
(CAN BE INSTALLED IN ANY INLET TYPE WITH OR WITHOUT A CURB BOX AS PER NOTE 2)

GENERAL NOTES:

MANUFACTURED ALTERNATIVES APPROVED AND LISTED ON THE DEPARTMENT'S EROSION CONTROL PRODUCT ACCEPTABILITY LIST MAY BE SUBSTITUTED.

WHEN REMOVING OR MAINTAINING INLET PROTECTION, CARE SHALL BE TAKEN SO THAT THE SEDIMENT TRAPPED ON THE GEOTEXTILE FABRIC DOES NOT FALL INTO THE INLET. ANY MATERIAL FALLING INTO THE INLET SHALL BE REMOVED IMMEDIATELY.

1. FINISHED SIZE, INCLUDING FLAP POCKETS WHERE REQUIRED, SHALL EXTEND A MINIMUM OF 10" AROUND THE PERIMETER TO FACILITATE MAINTENANCE OR REMOVAL.

2. FOR INLET PROTECTION, TYPE C (WITH CURB BOX). AN ADDITIONAL 18" OF FABRIC IS WRAPPED AROUND THE WOOD AND SECURED WITH STAPLES. THE WOOD SHALL NOT BLOCK THE ENTIRE HEIGHT OF THE CURB BOX OPENING.

3. FLAP POCKETS SHALL BE LARGE ENOUGH TO ACCEPT WOOD 2X4.

INSTALLATION NOTES:

TYPE D
DO NOT INSTALL INLET PROTECTION TYPE D IN INLETS SHALLOWER THAN 30", MEASURED FROM THE BOTTOM OF THE INLET TO THE TOP OF THE GRATE.

TRIM EXCESS FABRIC IN THE FLOW LINE TO WITHIN 3" OF THE GRATE.

THE INSTALLED BAG SHALL HAVE A MINIMUM SIDE CLEARANCE, BETWEEN THE INLET WALLS AND THE BAG, MEASURED AT THE BOTTOM OF THE OVERFLOW HOLES, OF 3". WHERE NECESSARY THE CONTRACTOR SHALL CINCH THE BAG, USING PLASTIC ZIP TIES, TO ACHIEVE THE 3" CLEARANCE. THE TIES SHALL BE PLACED AT A MAXIMUM OF 4" FROM THE BOTTOM OF THE BAG.

INLET PROTECTION DETAIL
NO SCALE

NOTE: ADDITIONAL POST DEPTH OR TIE BACKS MAY BE REQUIRED IN UNSTABLE SOILS

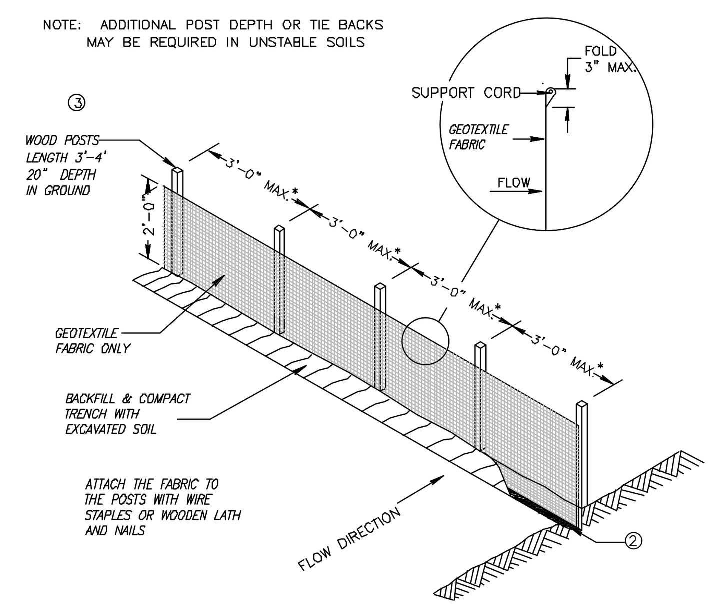

* NOTE: 8'-0" POST SPACING ALLOWED IF A WOVEN GEOTEXTILE FABRIC IS USED.

SILT FENCE

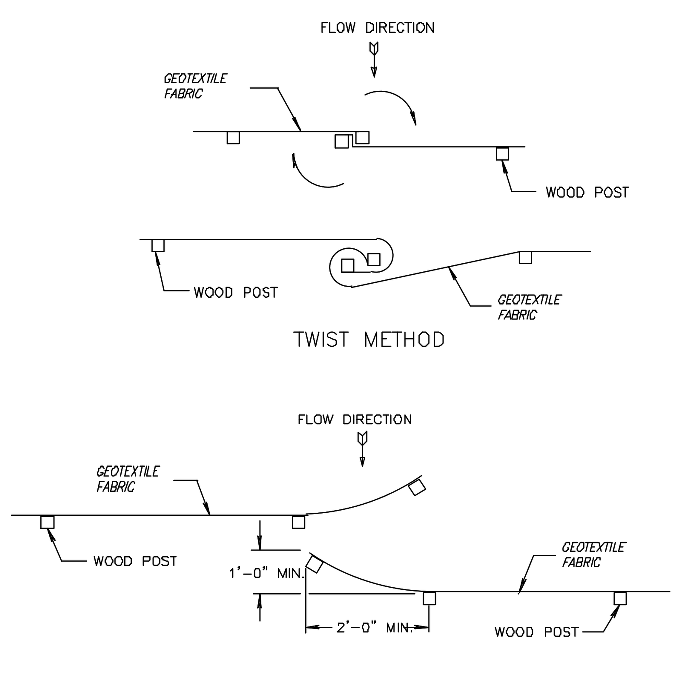

JOINING TWO LENGTHS OF SILT FENCE ⑤

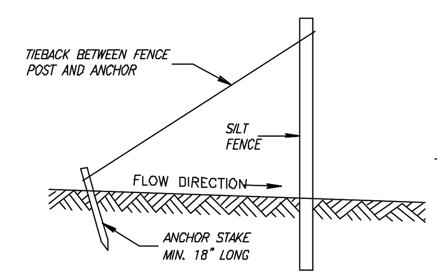

SILT FENCE TIE BACK
(WHEN ADDITIONAL SUPPORT REQUIRED)

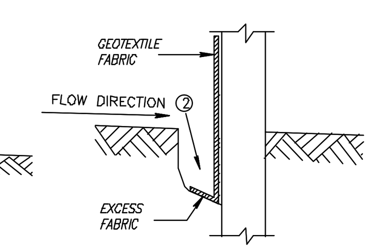

TRENCH DETAIL

GENERAL NOTES

① HORIZONTAL BRACE REQUIRED WITH 2" X 4" WOODEN FRAME OR EQUIVALENT AT TOP OF POSTS.
② TRENCH SHALL BE A MINIMUM OF 4" WIDE & 6" DEEP TO BURY AND ANCHOR THE GEOTEXTILE FABRIC. FOLD MATERIAL TO FIT TRENCH AND BACKFILL & COMPACT TRENCH WITH EXCAVATED SOIL.
③ WOOD POSTS SHALL BE A MINIMUM SIZE OF 1?" X 1?" OF OAK OR HICKORY.
④ SILT FENCE TO EXTEND ACROSS THE TOP OF THE PIPE.
⑤ CONSTRUCT SILT FENCE FROM A CONTINUOUS ROLL IF POSSIBLE BY CUTTING LENGTHS TO AVOID JOINTS. IF A JOINT IS NECESSARY USE ONE OF THE FOLLOWING TWO METHODS; A) OVERLAP THE END POSTS AND TWIST, OR ROTATE, AT LEAST 180 DEGREES, B) HOOK THE END OF EACH SILT FENCE LENGTH.

SILT FENCE INSTALLATION DETAIL
NO SCALE

This drawing based on Wisconsin Department of Transportation Standard Detail Drawing 8 E 9-6.

NOTE:
SURFACE WATER MUST BE PREVENTED FROM PASSING THROUGH THE TRACKING PAD. FLOWS SHALL BE DIVERTED AWAY FROM TRACKING PADS OR CONVEYED UNDER AND AROUND THEM BY USING A VARIETY OF PRACTICES, SUCH AS CULVERTS, WATER BARS, OR OTHER SIMILAR PRACTICES.

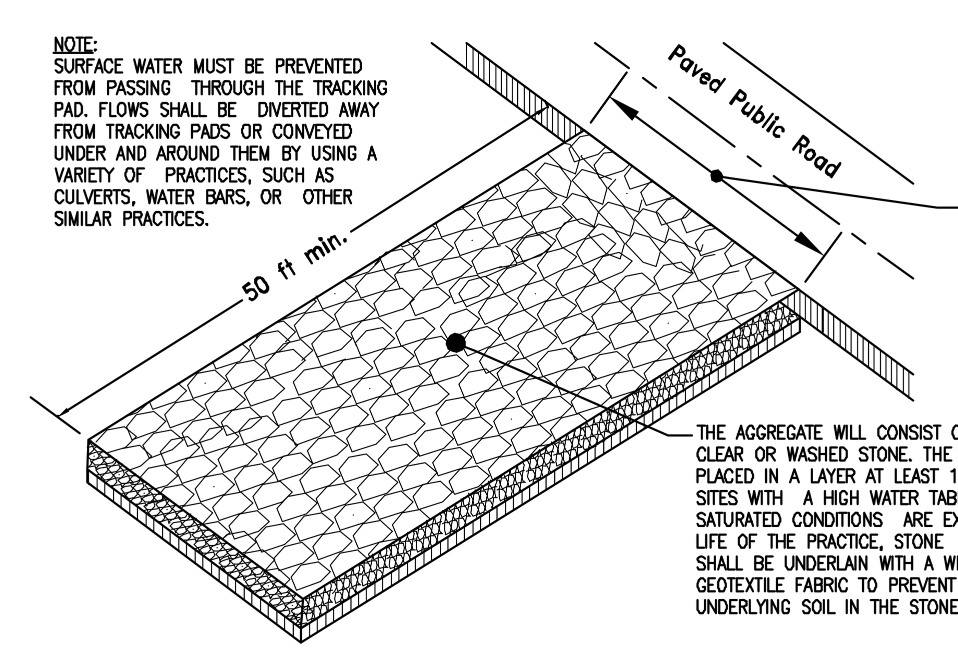

CONSTRUCTION ENTRANCE DETAIL
NO SCALE

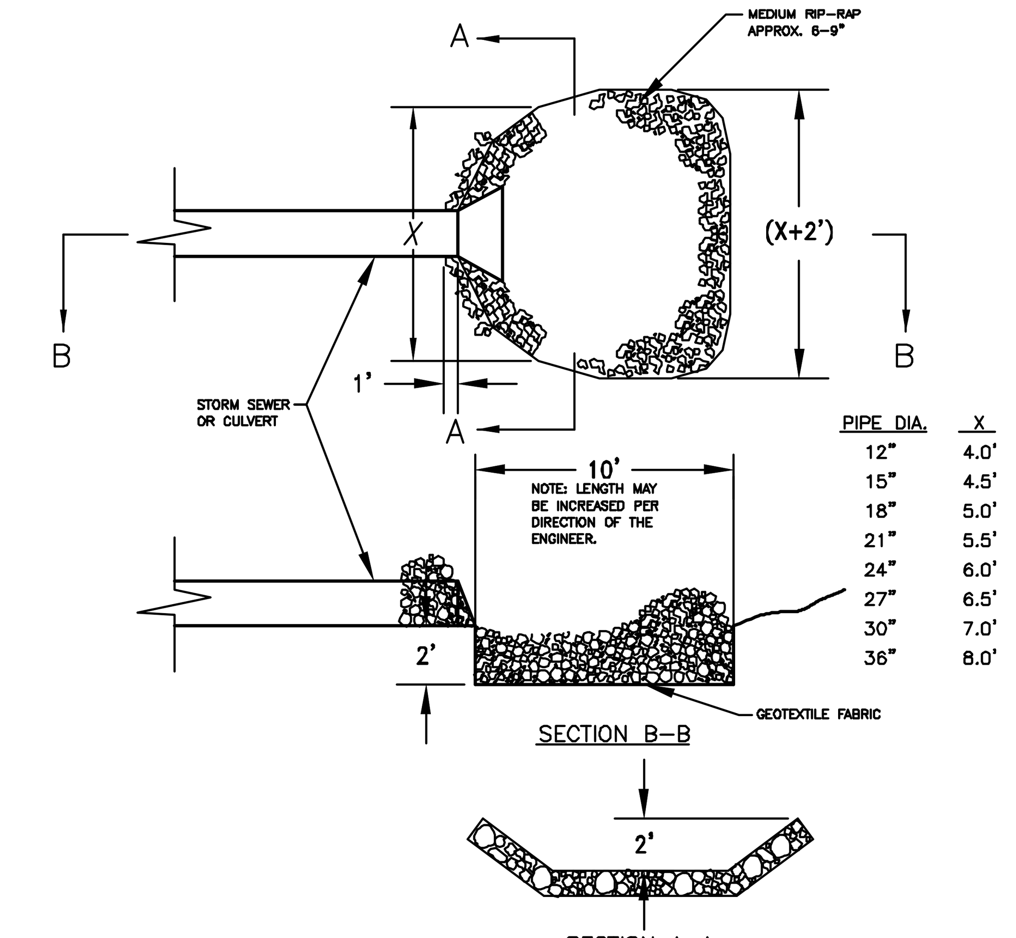

PIPE DIA.	X
12"	4.0'
15"	4.5'
18"	5.0'
21"	5.5'
24"	6.0'
27"	6.5'
30"	7.0'
36"	8.0'

RIP-RAP DETAIL
NO SCALE

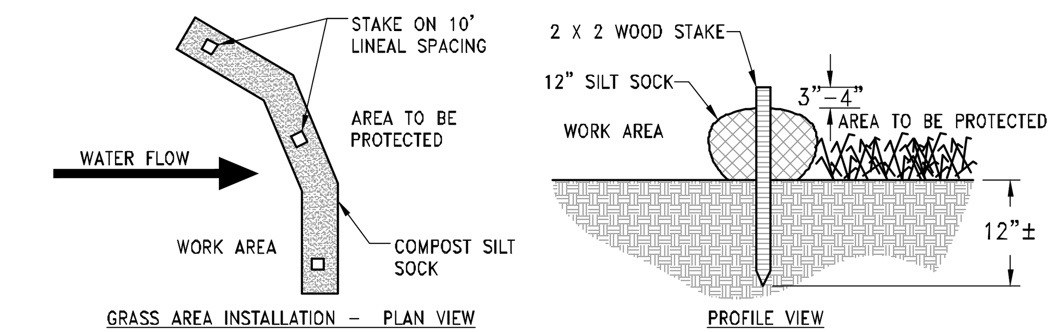

NOTES:
1. ALL MATERIAL TO MEET MANUFACTURER'S SPECIFICATIONS
2. REFER TO MANUFACTURERS AND/OR SUPPLIERS. SPECIFICATIONS FOR INSTALLATION RECOMMENDATIONS.
3. ACTUAL LOCATION MAY BE FIELD ADJUSTED TO MINIMIZE DISTURBANCE TO EXISTING VEGETATION.

SILT SOCK DETAIL
NO SCALE

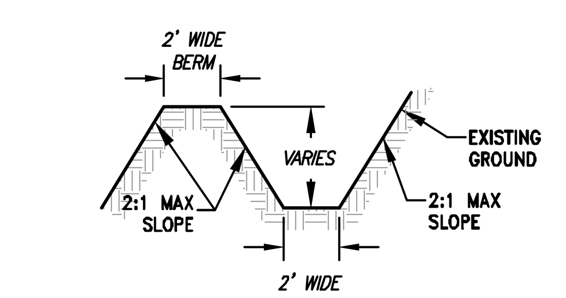

NOTES:
1. TEMPORARY SEED/EROSION MAT/STABILIZE BERMS AND DITCHES IMMEDIATELY AS ANY SECTION IS COMPLETED PER WisDOT STD. SPEC.
2. REFER TO WISCONSIN DNR TECHNICAL STANDARD 1066 FOR ADDITIONAL INFORMATION.

DIVERSION BERM/SWALE DETAIL
NO SCALE

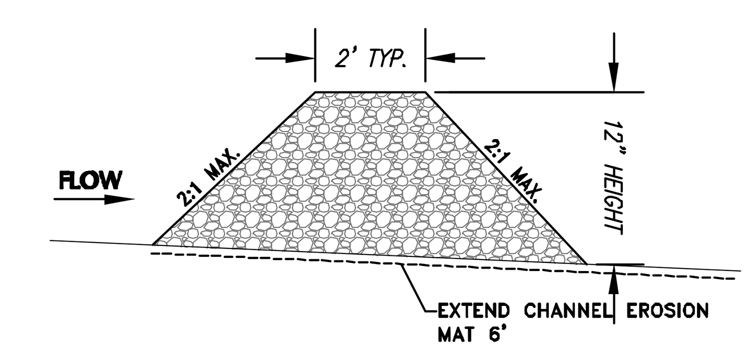

NOTES:
- STONE DITCH CHECKS SHALL BE CONSTRUCTED OF A WELL GRADED ANGULAR STONE, A D^{50} OF 3" OR GREATER, SOMETIMES REFERED TO AS BREAKER RUN OR SHOTROCK.
- CREST OF DAM SHALL BE LOWER IN THE MID, AS COMPARED TO THE ENDS.
- REFER TO WDNR TECHNICAL STANDARD 1062 FOR ADDITIONAL DETAILS.

STONE DITCH CHECK DETAIL
NO SCALE

WISCONSIN PROFESSIONAL ENGINEER — JOSHUA D. PUDELKO E-39420 WAUWATOSA, WI

TRIO — DESIGN • LAND SURVEYING — CIVIL ENGINEERING
12660 W. NORTH AVENUE, BLDG. "D"
BROOKFIELD, WI 53005
PHONE: (262) 790-1480
FAX: (262) 790-1481
EMAIL: jpudelko@trioeng.com

PROJECT:
ASPEN OVERLOOK
TENNY AVENUE (EXTENDED) & LES PAUL PARKWAY
WAUKESHA, WISCONSIN
CORNERSTONE DEVELOPMENT OF S.E. WI
N63 W23849 MAIN STREET
SUSSEX, WI 53089

REVISION HISTORY

DATE	DESCRIPTION
01/05/21	INITIAL SUBMITTAL
02/22/21	PER CITY COMMENTS

DATE:
FEBRUARY 22, 2021

JOB NUMBER:
889-12011-01

DESCRIPTION:
CONSTRUCTION NOTES AND DETAILS

SHEET
C5.0

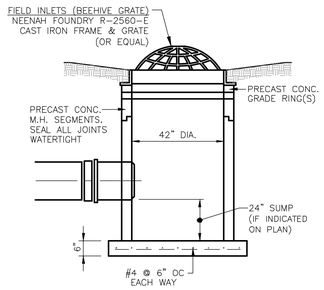

STORM SEWER FIELD INLET DETAIL

NO SCALE

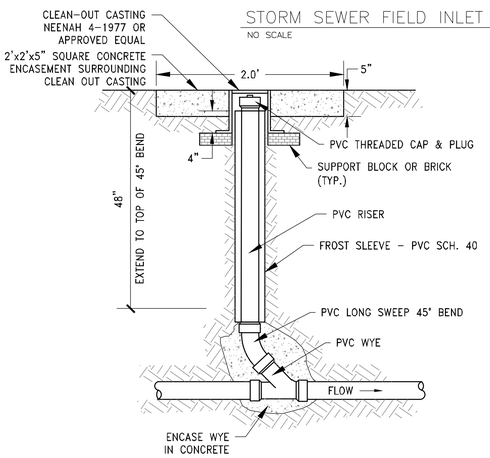

CLEAN-OUT STRUCTURE DETAIL

NO SCALE

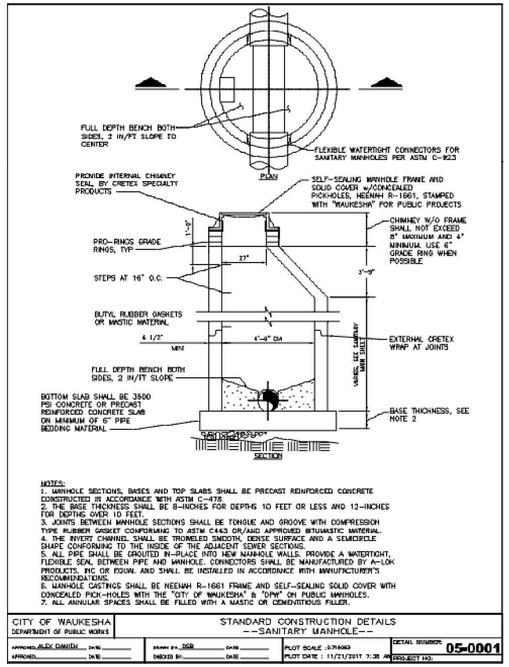

NOTES:
1. MANHOLE SECTIONS, BASES AND TOP SLABS SHALL BE PRECAST REINFORCED CONCRETE CONSTRUCTED IN ACCORDANCE WITH ASTM C-478.
2. THE BASE THICKNESS SHALL BE 6-INCHES FOR DEPTHS 10 FEET OR LESS AND 12-INCHES FOR DEPTHS OVER 10 FEET.
3. JOINTS BETWEEN MANHOLE SECTIONS SHALL BE TONGUE AND GROOVE WITH COMPRESSION TYPE RUBBER GASKET CONFORMING TO ASTM C443 OR/AND APPROVED BITUMASTIC MATERIAL.
4. THE INVERT CHANNEL SHALL BE TROWELED SMOOTH, DENSE SURFACE AND A SEMICIRCLE SHAPE CONFORMING TO THE INSIDE OF THE ADJACENT SEWER SECTIONS.
5. ALL PIPE SHALL BE GROUTED IN-PLACE INTO NEW MANHOLE WALLS. PROVIDE A WATERTIGHT, FLEXIBLE SEAL BETWEEN PIPE AND MANHOLE. CONNECTORS SHALL BE MANUFACTURED BY A-LOK PRODUCTS, INC OR FOSIM, AND SHALL BE INSTALLED IN ACCORDANCE WITH MANUFACTURER'S RECOMMENDATIONS.
6. MANHOLE CASTINGS SHALL BE NEENAH R-1661 FRAME AND SELF-SEALING SOLID COVER WITH CONCEALED PICK-HOLES WITH THE "CITY OF WAUKESHA" & "DPW" ON PUBLIC MANHOLES.
7. ALL ANNULAR SPACES SHALL BE FILLED WITH A MASTIC OR CEMENTITIOUS FILLER.

CITY OF WAUKESHA DEPARTMENT OF PUBLIC WORKS	STANDARD CONSTRUCTION DETAILS --SANITARY MANHOLE--	DETAIL NUMBER: 05-0001
APPROVED: ALEX DAMIEN DATE:	DRAWN BY: DGB DATE:	PLOT SCALE : 0.79063
APPROVED: DATE:	CHECKED BY: DATE:	PLOT DATE : 11/21/2017 7:38 AM PROJECT NO:

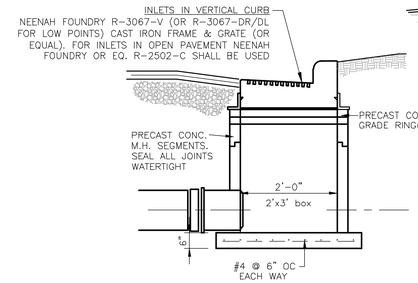

STORM SEWER INLET

NO SCALE

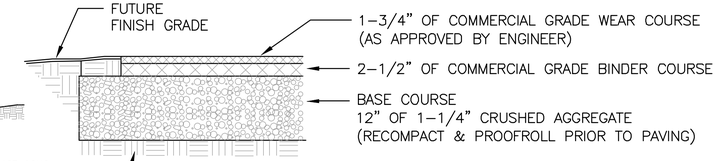

NOTE: ALL AGGREGATE PROVIDED MUST COMPLY WITH "SECTION 305 DENSE GRADED BASE" OF THE WISCONSIN STANDARD SPECIFICATIONS FOR HIGHWAY AND STRUCTURE CONSTRUCTION

ASPHALT PAVING DETAIL

NO SCALE

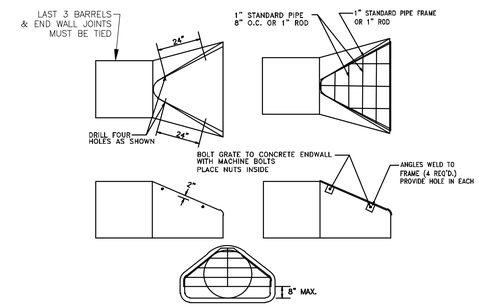

PIPE GRATE DETAIL

NO SCALE

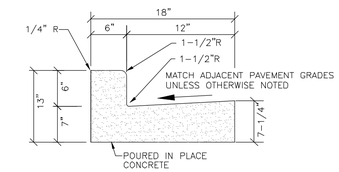

18" CONCRETE CATCH CURB & GUTTER

NO SCALE

NOTE: ALL PROPOSED CURB & GUTTER SHALL BE 18" CONCRETE CATCH CURB & GUTTER UNLESS OTHERWISE NOTED.

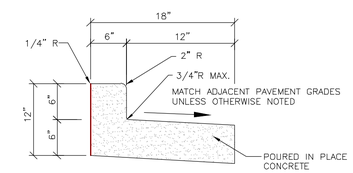

18" REJECT CURB & GUTTER DETAIL

NO SCALE

NOTE: SEE PROPOSED SITE PLAN FOR LIMITS OF PROPOSED REJECT CURB & GUTTER.

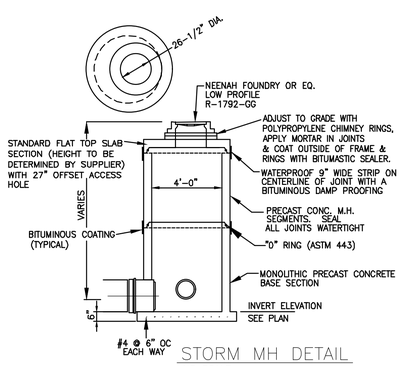

STORM MH DETAIL

NO SCALE

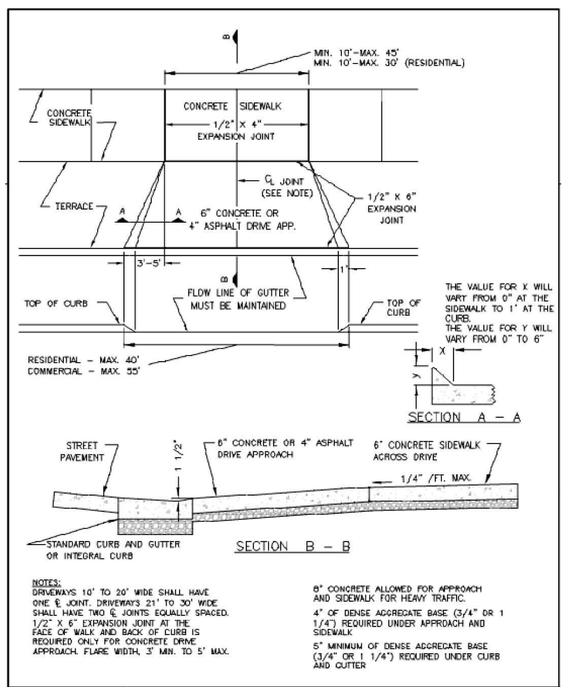

NOTES:
DRIVEWAYS 10' TO 20' WIDE SHALL HAVE ONE ℄ JOINT. DRIVEWAYS 21' TO 30' WIDE SHALL HAVE TWO ℄ JOINTS EQUALLY SPACED.
1/2" X 6" EXPANSION JOINT AT THE FACE OF WALK AND BACK OF CURB IS REQUIRED ONLY FOR CONCRETE DRIVE APPROACH. FLARE WIDTH, 3' MIN. TO 5' MAX.

6" CONCRETE ALLOWED FOR APPROACH AND SIDEWALK FOR HEAVY TRAFFIC.
4" OF DENSE AGGREGATE BASE (3/4" OR 1 1/4") REQUIRED UNDER APPROACH AND SIDEWALK
5" MINIMUM OF DENSE AGGREGATE BASE (3/4" OR 1 1/4") REQUIRED UNDER CURB AND GUTTER

CITY OF WAUKESHA DEPARTMENT OF PUBLIC WORKS	STANDARD CONSTRUCTION DETAILS --STANDARD DRIVE APPROACH--	DETAIL NUMBER: 07-0320
APPROVED: ALEX DAMIEN DATE:	DRAWN BY: DGB DATE:	PLOT SCALE : 1=5_XREF
APPROVED: DATE:	CHECKED BY: DATE:	PLOT DATE : 1/17/2018 6:44 AM PROJECT NO:

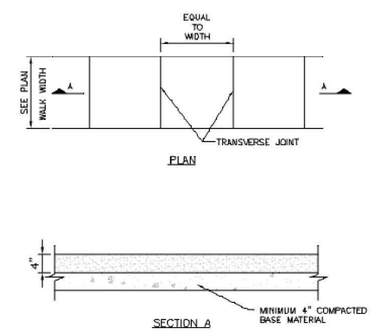

NOTES:
1. TRANSVERSE JOINTS SHALL BE CUT WITH A JOINTER HAVING A RADIUS OF 1/4" AT SPACING AS INDICATED OR AS DIRECTED BY THE ENGINEER.

2. SIDEWALK SHALL BE 6" THICK AT ALL DRIVEWAY CROSSING.

CITY OF WAUKESHA DEPARTMENT OF PUBLIC WORKS	STANDARD CONSTRUCTION DETAILS --CONCRETE SIDEWALK--	DETAIL NUMBER: 07-0300
APPROVED: ALEX DAMIEN DATE:	DRAWN BY: DGB DATE:	PLOT SCALE : 1" = 1'
APPROVED: DATE:	CHECKED BY: DATE:	PLOT DATE : 11/27/2017 @ 15 AM PROJECT NO:

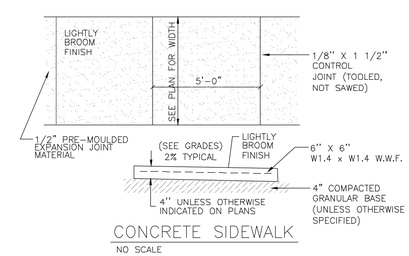

CONCRETE SIDEWALK

NO SCALE

JOSHUA D. PUDELKO
E-39-PE
WAUWATOSA
WI
PROFESSIONAL ENGINEER

TRIO
DESIGN • LAND SURVEYING
CIVIL ENGINEERING

12660 W. NORTH AVENUE, BLDG. "D"
BROOKFIELD, WI 53005
PHONE: (262) 790-1480
FAX: (262) 790-1481
EMAIL: jpudelko@trioeng.com

PROJECT:
ASPEN OVERLOOK
TENNY AVENUE (EXTENDED) & LES PAUL PARKWAY
WAUKESHA, WISCONSIN
CORNERSTONE DEVELOPMENT OF S.E. WI
N63 W23849 MAIN STREET
SUSSEX, WI 53089

REVISION HISTORY

DATE	DESCRIPTION
09/08/21	INITIAL SUBMITTAL
02/22/21	PER CITY COMMENTS

DATE:
FEBRUARY 22, 2021

JOB NUMBER:
889-12011-01

DESCRIPTION:
CONSTRUCTION NOTES AND DETAILS

SHEET
C5.1

H:\C800\889\12011-01\CONSTRUCTION PLANS\2020-ASPEN OVERLOOK\CIVIL PLANS_ASPEN OVERLOOK-22X34.DWG

The work contained in this Contract is to be done in accordance with the Specifications for Water Main & Service Lateral Materials and Installation of Water Main & Appurtenances for Waukesha Water Utility of the City of Waukesha dated February 28, 2011, the regulations of the Wisconsin Department of Natural Resources (WDNR), AWWA Specifications, Manufacturers' Recommendations, City of Waukesha Standard Construction Specifications (for sewer construction), Standard Specifications for Sewer and Water Construction in Wisconsin, Sixth Edition and the City of Waukesha Standard Construction Specifications, 1972 Edition as revised, except as provided for within this document.

All applicable sections of the revised City of Waukesha Standard Construction Specifications (for sewer construction) are available at the office of the Director of Public Works. The City of Waukesha Standard Construction Specifications, 1972 Edition, are available at the Office of Director of Public Works, Waukesha City Hall Annex, 130 Delafield Street.

General Underground

The Contractor shall be solely responsible for providing trench support in accordance with all applicable State and Federal regulations. The Owner and Inspector shall be held harmless in all matters regarding shoring and bracing.

- Backfill:
Compacted granular backfill is required throughout. Granular backfill must meet the gradation requirements according to Section 8.43.4 of the Standard Specifications for Sewer and Water Construction in Wisconsin, Sixth Edition. The compacted material shall have an initial lift of 2-Feet and subsequent lifts of 1-Foot.

The Contractor for this project will be required to meet a minimum compaction of 95% Standard Proctor Density in the top three feet of the granular backfill and 90% Standard Proctor Density in the remaining depth of the trench. Testing will be done by owner at no cost to the Contractor for water main. The Contractor will be required to expose areas of the trench for the desired depth for testing. Compaction testing shall be completed by the Contractor for the utilities other than water main. Digital testing reports shall be submitted to the Owner on a weekly basis for informational purposes.

The top 12-Inches of all trenches shall consist of 1 ¼-Inch traffic bond stone.

Stone chips are required 4-Inch under and 12-Inch over the pipe as a minimum. Sand is required around all copper water laterals and brass fittings.

Water Main

An Owner representative shall provide inspection for the Waukesha Water Utility. Contractor shall provide 72 hours (3 work days) notice of the anticipated need for inspection services. No work shall be undertaken without an inspector being on site without the permission of the Owner. Payments may be denied, or removal of work may be ordered, for work accomplished without an inspector present or without the approval of the Owner.

Existing valves and hydrants shall be operated only by the Waukesha Water Utility personnel or in the presence of the inspector, as authorized by the Waukesha Water Utility.

All water main materials and procedures shall be in accordance with Waukesha Water Utility specifications dated August 29, 2014.

- Materials:
All 6" & 8" water main shall be Polyvinyl Chloride (Class DR-18) AWWA C-900.
All 16" water main shall be ductile iron pipe conforming to ANSI / AWWA C151 / A21.51, Class 52 with cement mortar-lined, push-on joints.
All water service laterals shall be 1 1/4" 'PE' Tubing.

The Waukesha Water Utility will provide the tapping sleeve, tapping valve, the valve box for the tapping valve and will tap the existing water main. The Contractor shall provide the trench, trench shield and a means for lowering the tapping machine.

Contractor shall provide all materials (pipe, fittings, valves, hydrants, accessories and sterilizing chemicals), equipment and labor to install the water main and appurtenances.

The Contractor shall submit to the Inspector and Owner, for approval, a list of all materials he/she intends to use prior to ordering and delivery to the job site, including the names of all material suppliers.

Storage of materials for construction will be permitted on the job site with prior Owner approval. Care shall be taken to avoid blocking driveways or interfering with traffic.

All water mains shall be tested in full accordance with the requirements of Chapter 4.15.0 and Section 5.5.18 of the Standard Specifications for Sewer and Water Construction in Wisconsin.

In addition to the above referenced State speculations, the following will apply for all water main flushing activities associated with this project. The contractor will be responsible for the addition of any temporary standpipes or temporary hydrants (may be supplied by the WWU, when available) as shown on the plans and as required for completion of the flushing and disinfection portions of the water main work. A minimum of twenty-four (24) hours after the water main has been filled; flush out the super chlorinated water from the water main. The super chlorinated water must be flushed using a fire hose or other approved DIRECT conveyance device into a tanker, into the sanitary sewer (with prior City Engineering Approval Required) or onto a neutralizer to keep the environment safe. Only the super chlorinated water should be flushed per the aforementioned methods. Once the super chlorinated water has been flushed, additional flushing methods should be used. These flushing methods must use the appropriate number of hoses or other DIRECT conveyance devices to reach the minimum water flow rate of two and half (2½') feet per second of water flow in the main as required for proper flushing. These hoses or devices must be supplied, installed and removed by the Contractor. **THE WATER MUST BE DISCHARGED IN SUCH A MANNER AS TO NOT PROMOTE EROSION OF THE AREA OR MOVEMENT OF SITE MATERIALS OFF SITE OR INTO THE STORM SEWER SYSTEM**. This may require discharge directly into an established storm sewer inlet, or conveyance to a clean and paved surface to utilize the existing curbs and storm sewer system. Flow of water from flushing or testing directly across disturbed surfaces will not be allowed. Flow of water within an existing curb and gutter line will only be allowed if the area is completely free of gravel and debris and if the flow fully remains on the undisturbed surface. It may be necessary to remove the inlet protection used during construction for the periods when flushing is occurring; these protections must be properly replaced when flushing has ended. Depending on the situation, it may also be necessary to stub up a temporary storm sewer inlet at flushing points if the distance to an established storm sewer system is too great.

The Contractor shall furnish and install all 8-Inch water main and fittings including tracer wire, bedding, cover and compacted granular backfill. The Contractor shall also provide the chlorination, flushing and pressure testing per the listed specifications. Whenever possible, maintaining a depth of six feet (6') of cover over the water main is preferred. The plan profile views show the approximate depth of the existing crossing utilities, which were marked at the time of the survey, except the sanitary sewer laterals. The Contractor is responsible for field verifying all existing utilities, to determine the proposed water main depth, including but not limited to the existing water mains, hydrant leads and laterals, sanitary sewer mains and laterals, storm sewers, gas mains and laterals, all electrical, telephone and fiber optic lines.
Any damage that may be done to the service laterals or any existing utility will be the sole responsibility of the Contractor. The Contractor is responsible for the necessary materials, excavation, backfill, compaction and maintenance of ditches for this work.

The Contractor shall furnish and install all 8-Inch gate valves and valve boxes including polyethylene wrap, bedding, cover and compacted granular backfill. The Contractor shall check all nuts and bolts for tightness, prior to installing valves. Any valve nut that needs to be placed deeper than seven feet (7.0') below finished grade, the Contractor shall install a valve extension on the nut. The top of the valve nut extension shall be between 4' and 6' from the finished grade. The Contractor is responsible for the necessary materials, excavation, backfill, compaction and maintenance of ditches for this work.
The Contractor shall furnish and install all hydrant assemblies, which includes 8"x6" anchor tees, 6" hydrant valves and valve boxes and 6" ductile iron hydrant leads including bedding, cover and compacted granular backfill. The Contractor shall check all nuts and bolts for tightness, prior to installing hydrants.

The front nozzle must be a minimum of eighteen inches (18") behind the back of curb or as shown on the plans and the center of the nozzle shall be between 18" and 24" above final grade. The tracer wire access box shall be installed during the hydrant installation, per figure 2 of the WWU Standard Specifications. The Contractor shall also provide the chlorination, flushing and pressure testing per the listed specifications. The Contractor is responsible for the necessary materials, excavation, backfill, compaction and maintenance of ditches for this work. The cost of this work shall be paid for under the Unit Bid Item "Furnish and Install Hydrant Assembly"**.**

THE CONTRACTOR WILL NEED TO INSTALL A 5 POUND ANODE BAG TO EACH COPPER SERVICE LATERAL. THE WAUKESHA WATER UTILITY WILL PROVIDE THE ANODES. THE CONNECTION SHALL BE MADE ON THE FITTING END THAT CONNECTS TO THE COPPER PIPE, IN THE TRACER WIRE ATTACHMENT NUT.

-Water Service Laterals:
The Contractor shall tap the new water main for a 1 1/4" service using an 8"x1 1/4" tapping saddle for PVC water main or a direct tap for D.I. water main using a 1 1/4" corporation and connect the existing copper service lateral into the corporation. There should be no pipe required for these services; the existing copper should be able to be bent into the new 1 1/4" corporation. All copper pipe connections to be compression connections.

Sanitary Sewer

All pipe must be inspected and marked prior to delivery to the job by an accredited testing laboratory.

The Contractor shall be responsible for providing all pumps, conduits, and other equipment required to divert the flow of sewage around the work area. The Contractor shall insure that surcharging and backups do not occur on public and private property. The Contractor will be required to make a temporary connection between the existing and proposed sewers and remove any diversion methods at the end of the day.

Install a plug in sanitary sewer prior to to starting at most downstream manhole. Plug shall be installed and secured in new sewer at existing manhole and remain in place until site is stable & removal is approved by City.

- Materials:
All 8" sanitary sewer shall be Polyvinyl Chloride SDR-35.
All sanitary laterals shall be 6" Polyvinyl Chloride SDR-35.

Storm Sewer

The Contractor shall use reinforced concrete sewer pipe (R.C.S.P.) for the proposed storm sewer. All pipes shall have an approved gasket joint. The Contractor will be required to use the following pipe classes:

- Class V for 12-Inch diameter pipe
- Class IV for 15-Inch diameter pipe
- Class III for 18+ -Inch diameter pipe

All pipe must be inspected and marked prior to delivery to the job by an accredited testing laboratory. The cost for this work shall be included in the bid items for storm sewer pipe.

-Backfill:
The standard pipe section for the storm sewer shall consist of crushed limestone chips from 4-Inches under the pipe and to 12 Inches over the R.C.S.P. storm sewer. The remainder of the trench shall be backfilled as stated above.

All manholes and inlets are to be sized according to manufacturer recommendations. Storm inlets shall be 24-Inch X 36-Inch unless larger is necessary. Manholes and inlets are to be precast.

A 2-Foot sump is required in all storm catch basin inlet structures.

The connections to the existing manholes or sewers shall be in a method approved by the Engineer.

The Contractor is responsible for protecting the proposed storm sewer during all stages of construction. Prior to paving, the Contractor shall inspect the storm sewer for damage.

Chimney Replacement

The entire chimney on all sanitary and storm manholes shall consist of adjustment rings manufactured from ARPRO Expanded Polypropylene (EPP). The rings shall be manufactured using a high compression molding process to produce a finished density of 120 g/l (7.5 pcf). Material shall be Pro-Ring as supplied by Cretex Specialty Products.

The replacement and any adjustment of chimneys on existing manholes within the paving limits shall consist of removing the entire chimney down to the cone section and replacing with the Pro-Rings to the proposed elevations.

The chimneys on new manholes are to be built to the proposed grades and shall be minimum height of 4 inches and a maximum height of 8 inches.

Installation Notes:

- Installation and surface preparation shall be in accordance with the manufacturer's instructions.
- Repair any surface defects or irregularities of the top of the manhole using a uniform bed of non- shrink grout meeting the requirements noted below.
- The joint between the first grade ring and manhole cone shall be sealed using an adhesive/sealant meeting the requirements noted below.
- The joints between all manhole adjustment rings shall be sealed using an adhesive/sealant noted below.
- The joint between the top manhole adjustment ring and the frame shall not be sealed with adhesive/sealant. On sanitary manholes, this joint will be sealed with an internal frame-chimney seal. The width of the seal shall be the minimum that is necessary to seal the joint between the frame and the Expanded Polypropylene (EPP) rings. Seal shall be manufactured by Cretex Specialty Products.
- All castings shall be centered over the opening of the corbel and adjusting rings. The top adjusting ring upon which the casting is set shall be level from side to side unless a pitch is required to match the surface in paved areas.

Any non-shrink mortar grout shall be Ipatop-Penngrout manufactured by IPA Systems, Inc. (www.ipasystems.com) or Engineer approved equal. The material shall contain a balanced blend of washed and graded silica sand, finely ground Portland cement, and applicable special additive(s). Contractor must supply the Engineer with verification of the product used.

Any adhesive or sealant used for watertight installation of the Pro-Ring manhole grade adjustment rings shall be M-1 Structural Adhesive/Sealant or equal meeting the following specifications:

- ASTM C-920, Type S, Grade NS, Class 25, Uses NT, T, M, G, A and O
- Federal Specification TT-S-00230-C Type II, Class A
- Corps of Engineers CRD-C-541, Type II, Class A
- Canadian Standards Board CAN 19, 13-M82
- AAMA 802.3-08 Type II, AAMA 803.3-08 Type I and AAMA 805.2-08 Group C

No other material shall be used in the construction of the chimney section beyond those materials indicated above. This includes wood shims, bricks, stones, etc.

The contractor shall install chimney seals in all sanitary manholes under this contract. The width of the seal shall be the minimum that is necessary to seal the joint between the frame and the Expanded Polypropylene (EPP) rings. Seal shall be manufactured by Cretex Specialty Products.

Aggregate

- Materials:
The Contractor shall supply and place aggregate according to the Wisconsin Department of Transportation Specifications for Highway and Structure Construction, Latest Edition, Section 305, titled Dense Graded Base.

The Contractor will have the option of using Crushed Stone or Crushed Concrete that meets the 1¼-Inch gradation. The Contractor shall provide a sieve analysis of the material to be used for approval. The thickness of base courses is listed in the above table and differs for either asphalt or concrete pavement.

Concrete

- Materials:
The concrete used in this contract shall conform to the State of Wisconsin Department of Transportation Standard Specifications for Highway and Structure Construction, Latest Edition, Section 501, titled Concrete. All concrete used in the work under the contract shall be Air Entrained Concrete. Grade A, Grade A2 or Grade A-FA with Class C Fly Ash.

The concrete curb and gutter shall be constructed with 30-Inch combination concrete curb and gutter

There shall be curb ramps constructed at all crosswalks as designated on the plans.
The ramps to be constructed shall conform to the Wisconsin DOT standard detail drawings (S.D.D. 8 D 5-15 b) included in the drawings.

The Contractor shall make sure each ramp complies with regulations before it is poured. In order to achieve the correct slope the adjacent walk may be lowered, which will then require additional grading, topsoiling, and sodding behind the walk.

All curb ramps constructed must have a detectable warning field. Use Neenah Foundry's 2-Foot x 2-Foot quick connect or 2-Foot x 4-Foot solid panels in construction yellow, or its approved equivalent.

Concrete Testing

Concrete testing shall be done at Contractors expense.

1. Concrete Cylinders:
   a. For every concrete pour less than 100 cubic yards, 4 cylinders shall be made and tested.
   b. For every concrete pour more than 100 cubic yards, 4 cylinders shall be made and tested for every 100 cubic yards or parts thereof poured.
2. Slump Tests: To be ordered by the Engineer.
3. Air Tests: To be ordered by the Engineer.

At any time the Engineer requires additional concrete tests to be performed, the contractor shall comply. These additional tests will be at the Contractor's expense.

Any concrete found not to meet City requirements, will be removed and replaced by the Contractor at the Contractor's expense.

All tests to be performed by an approved independent testing laboratory. Testing Company will supply the City all reports within 24-hours of testing.

Hot Mix Asphalt (HMA) Pavement

-Materials:
Hot Mix Asphalt in this contract shall conform to the State of Wisconsin Department of Transportation Specifications for Highway and Structure Construction, Latest Edition, Section 460, titled Hot Mix Asphalt (HMA) Pavement.

If the hot mix asphalt pavement (HMA) alternative selected, the proposed HMA roadway thickness shall be 5-Inches and will be paid for by the ton of HMA pavement. The pavement shall consist of the following:

Lower course: 3-1/2 - Inch HMA Pavement, Type E-0.3, 19.0mm
Surface course: 1-1/2 - Inch HMA Pavement, Type E-0.3, 9.5mm

The asphalt cement shall be performance graded PG 64-28. The Contractor shall provide a current mix design that will be used on the project.

A pre-paving meeting shall be held with the Paving Contractor, the General Contractor and the City of Waukesha prior to paving to review paving procedures (i.e. to minimize cold joints).

The Contractor shall provide and maintain a quality control program according to the State of Wisconsin Quality Management Program for HMA pavement. It is anticipated that the tests performed and the schedule of testing will strictly follow the guidelines of the State of Wisconsin

QMP in the early stages of the contract. As the contract proceeds toward completion, the testing and schedule may be relaxed or even suspended by the Engineer depending upon results obtained from tests performed earlier in the contract. The Contractor will test material from the plant at least once per day.

A quality control program is defined as all activities, including mix design, process control inspection, sampling and testing, and necessary adjustments in the process that are related to the production of a HMA pavement which meets the requirements of the specifications. Payment for the Quality Management Program will be included in the per ton price of the HMA pavement.

During the placement of the lower and surface courses of HMA pavement, the Contractor shall provide Nuclear Density Testing of the pavement. Tests shall be according to Section 460.3.3 of the State of Wisconsin Department of Transportations Standard Specifications for Highway and Structure Construction, Latest Edition except the random testing schedule shall be one test per 100-Tons of HMA pavement placed within a single layer. All testing shall be included in the price of the HMA pavement. The Contractor will be required to submit test reports.

Prior to placement of the lower course, all butt joints shall be inspected to assure a clean edge.
If the edge has deteriorated, it shall be re-sawcut. The re-sawing of a butt joint at the pavement limits will not be paid for.
Final approval of the lower courses must be obtained prior to the placement of the surface course.

The courses must be placed on separate days unless approved by the Engineer.

All landscaping must be completed before the surface course can be placed.

After the lower course and before the surface course is placed, all butt joints shall be inspected to assure a clean edge. A partial depth sawcut may be required to provide a clean edge, if the edge has deteriorated.

The Contractor is responsible for sweeping the street before the placement of the next course. The cost of street sweeping will be included in the per ton price of the asphalt quantities.

Tack shall be applied to the lower course, at a rate of 0.10 gallons per square yard, prior to the placement of the next HMA pavement course. The cost of the tack is to be included in the price of the asphalt quantities.

Manholes, valves and other street structures may be adjusted to final grade prior to the placement of the lower course. Any street structure found to be adjusted to the wrong elevation after the lower course has been placed must be readjusted prior to the placement of the surface course. Manholes and street structures raised to final grade prior to the placement of the lower course must be ramped with asphalt until the surface course is placed. Prior to the placement of the surface course the Contractor shall remove these ramps.

A proof roll with a fully loaded ti-axle dump truck is required to be observed and approved by City staff prior to filling over native soils within the right of way areas, and of the subbase prior to installation of the stone base course. Undercut areas will be marked and shall be corrected to obtain an approved proof roll.

-Surface tolerances:

Surface tolerances shall follow the City of Waukesha Standard Construction Specifications, 1972 Edition, Part VII, Titled Asphalt Construction, Part VII, Titled Asphalt Construction, Section B No. 16 except as provided:

- Surface tolerance at concrete curb flange at curb ramp locations - the HMA Pavement surface shall be placed flush with the flange of the concrete curb at all curb ramp locations. If the surface is installed greater than 1/8-inch above the curb flange at the curb ramps, the Contractor shall be required to remedy as directed by the Engineer.
- Surface tolerance at concrete curb flange - the HMA Pavement surface shall be placed no higher than 1/4-inch above the flange of the concrete curb and gutter at all locations other than at curb ramps. If the surface is installed greater than 3/8-inch above the curb flange, the Contractor shall be required to remedy as directed by the Engineer.
- Surface tolerance of street structures- Manholes, valves and other street structures shall be adjusted to 1/4-inch below the HMA Pavement surface.
- Structure below HMA Pavement - Locations where structures are found to be between 1/4-inch and 1/2-inch below the pavement surface will not require remediation. Structures found to be greater than a 1/2-inch below the proposed HMA Pavement surface will require correction as directed by the Engineer.
- Structure above HMA Pavement - Structures found to be greater than 1/4-inch above the proposed HMA Pavement surface will require correction as directed by the Engineer.

Filling in Public Right-of-Way Areas

The reconstruction of public streets shall be excavated and filled to the typical sections as shown on the plans.

All topsoil and organics shall be stripped and the native soil shall be proof rolled prior to placing fill. Fill shall be placed in lifts no larger than 12 inches. Fill material shall contain no particles larger than two (2") inches in diameter in the top two feet blow the subgrade.

The subgrade shall be comprised of sound inorganic material free from topsoil or other deleterious material. Acceptable excavated subgrade material shall be moved to locations on this project where fill is required. All fill shall be compacted to 95% of the maximum dry density as determined by the Standard Proctor method (ASTM D698). Reports shall be provided to the City for filing.

Prior to placement of any base course material on the public roadway subgrade, the City of Waukesha or their representative engineer must check subgrade for proper compaction and grade.

Warranty for Public Infrastructure

The sewer work included in this Contract (excluding manufacturers warranties which may be longer) shall be and is warranted for a period of one (1) year from the completion date of work and as further detailed in the Standard Specifications for Sewer and Water Construction in Wisconsin.

The guarantee (warranty) period for all asphalt work in this Contract shall be two (2) years from the final completion date. Pavement deficiencies found within the 2 year warranty period shall be addressed as noted below:
- All paving joints (longitudinal and transverse) that open shall be routed and crack sealed as determined by the Engineer.
- All pre-mature cracks shall be crack sealed or routed and crack sealed as determined by the Engineer.
- Any other pavement irregularities shall be addressed in a method approved by the Engineer.

If deficiencies are discovered within the 2 year warranty period, an additional 1 year warranty will be required after the deficiencies have been addressed.

The guarantee (warranty) period for all concrete work in this Contract shall be two (2) years from the final completion date. If deficiencies are discovered within the 2 year warranty period, an additional 1 year warranty will be required after the deficiencies have been addressed.

The guarantee (warranty) period for all topsoil, sod and restoration work in this contract shall be one (1) year from the final completion date.

WISCONSIN
JOSHUA D. PUDELKO
E-39420
WAUWATOSA, WI
PROFESSIONAL ENGINEER

DESIGN • LAND SURVEYING
TRIO
CIVIL ENGINEERING
12660 W. NORTH AVENUE, BLDG. "D"
BROOKFIELD, WI 53005
PHONE: (262) 790-1480
FAX: (262) 790-1481
EMAIL: jpudelko@trioeng.com

PROJECT:
ASPEN OVERLOOK
TENNY AVENUE (EXTENDED) & LES PAUL PARKWAY
WAUKESHA, WISCONSIN
CORNERSTONE DEVELOPMENT OF S.E. WI
N63 W23849 MAIN STREET
SUSSEX, WI 53089

REVISION HISTORY	
DATE	DESCRIPTION
01/05/21	INITIAL SUBMITTAL
02/22/21	PER CITY COMMENTS

DATE:
FEBRUARY 22, 2021

JOB NUMBER:
889-12011-01

DESCRIPTION:
PROJECT SPECIFICATIONS

SHEET
C6.0