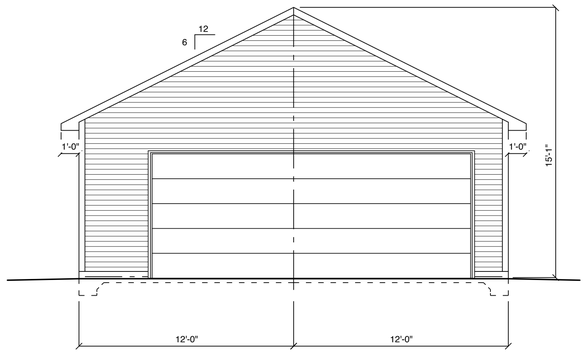

FRONT ELEVATION

SCALE: 1/4" = 1'-0"

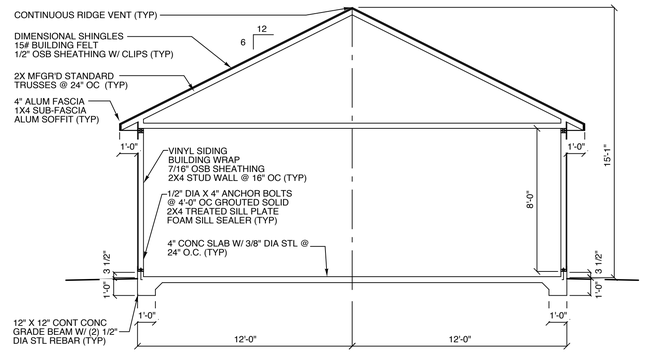

TYPICAL PARTIAL WALL SECTION

SCALE: 1/4" = 1'-0"

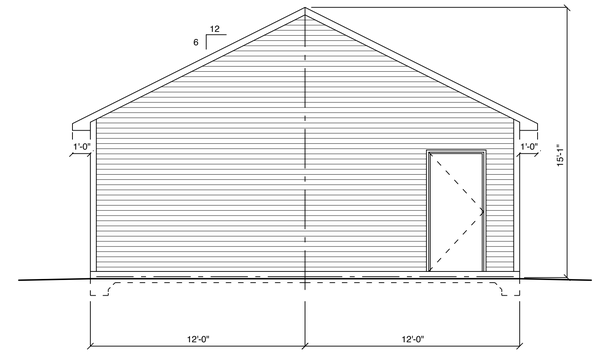

REAR ELEVATION

SCALE: 1/4" = 1'-0"

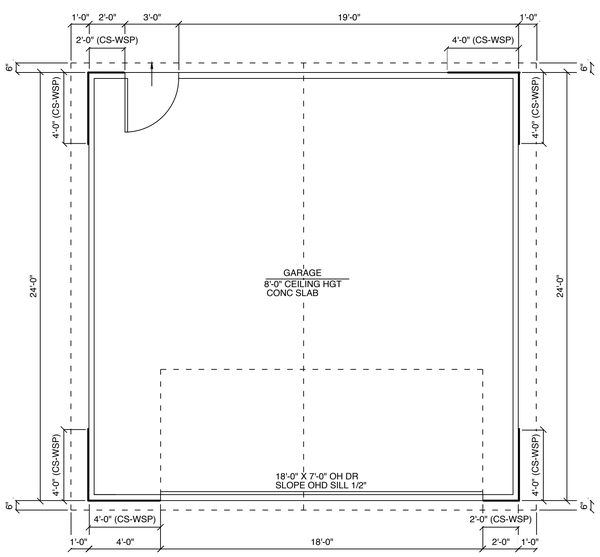

PROPOSED GARAGE FLOOR PLAN

SCALE: 1/4" = 1'-0"

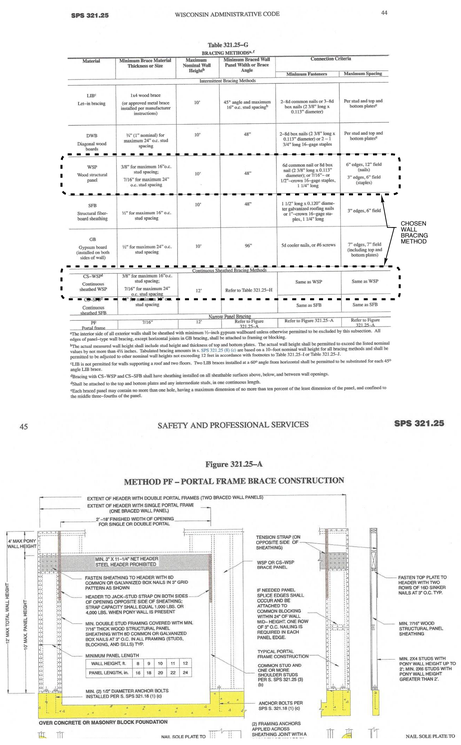

SPS 321.25 WISCONSIN ADMINISTRATIVE CODE 44

Table 321.25–G
BRACING METHODS[1]

Material	Minimum Brace Material Thickness or Size	Maximum Nominal Wall Height[2]	Minimum Braced Wall Panel Width or Brace Angle	Connection Criteria	
				Minimum Fasteners	Maximum Spacing
Intermittent Bracing Methods					
LIB[3] Let-in bracing	1x4 wood brace (or approved metal brace installed per manufacturer instructions)	10'	45° angle and maximum 16" o.c. stud spacing[4]	2–8d common nails or 3–8d box nails (2 3/8" long x 0.113" diameter)	Per stud and top and bottom plates[5]
DWB Diagonal wood boards	½" (1" nominal) for maximum 24" o.c. stud spacing	10'	48"	2–8d box nails (2 3/8" long x 0.113" diameter) or 2 – 1 3/4" long 16-gage staples	Per stud and top and bottom plates[5]
WSP Wood structural panel	3/8" for maximum 16"o.c. stud spacing; 7/16" for maximum 24" o.c. stud spacing	10'	48"	6d common nail or 8d box nail (2 3/8" long x 0.113" diameter); or 7/16" – or 1/2"–covers 16-gage staples, 1 3/4" long	6" edges, 12" field (nails) 3" edges, 6" field (staples)
SFB Structural fiber-board sheathing	½" for maximum 16" o.c. stud spacing	10'	48"	1 1/2" long x 0.120" diameter galvanized roofing nails or 7/–covers 16-gage staples, 1 3/4" long	3" edges, 6" field
GB Gypsum board (installed on both sides of wall)	½" for maximum 24" o.c. stud spacing	10'	96"	5d cooler nails, or #6 screws	7" edges, 7" field (nails or screws) and bottom plate
Continuous Sheathed Bracing Methods					
CS–WSP Continuous sheathed WSP	3/8" for maximum 16"o.c. stud spacing; 7/16" for maximum 24" o.c. stud spacing	12'	Refer to Table 321.25–H	Same as WSP	Same as WSP
CS–SFB Continuous sheathed SFB	½" for maximum 16" o.c. stud spacing	12'	Refer to Table 321.25–H	Same as SFB	Same as SFB
Narrow Panel Bracing					
PF Portal frame	7/16"	12'	Refer to Figure 321.25–A	Refer to Figure 321.25–A	Refer to Figure 321.25–A

CHOSEN WALL BRACING METHOD

[1]Bracing of all exterior walls shall be sheathed with minimum ½–inch gypsum wallboard unless otherwise permitted to be excluded by this subsection. All edges of panel–type wall bracing, except horizontal joints in GB bracing, shall be attached to framing or blocking.

[2]The actual mounted wall height shall include stud height and thickness of top and bottom plates. The actual wall height shall be permitted to exceed the listed nominal values by not more than 4½ inches. Tabulated bracing amounts in s. SPS 321.25 (1) are based on a 10–foot nominal wall height for all bracing methods and shall be permitted to be adjusted to other nominal wall heights not exceeding 12 feet in accordance with footnotes to Table 321.25–I or Table 321.25–J.

[3]LIB is not permitted for walls supporting a roof and two floors. Two LIB braces installed at a 60° angle from horizontal shall be permitted to be substituted for each 45° angle LIB brace.

[4]Bracing with CS–WSP and CS–SFB shall have sheathing installed on all sheathable surfaces above, below, and between wall openings.

[5]Shall be attached to the top and bottom plates and any intermediate studs, in one continuous length.

[6]Each braced panel may contain no more than one hole, having a maximum dimension of no more than ten percent of the least dimension of the panel, and confined to the middle three–fourths of the panel.

45 SAFETY AND PROFESSIONAL SERVICES SPS 321.25

Figure 321.25–A
METHOD PF – PORTAL FRAME BRACE CONSTRUCTION

CHOSEN WALL BRACING @ GARAGE DOOR WALLS

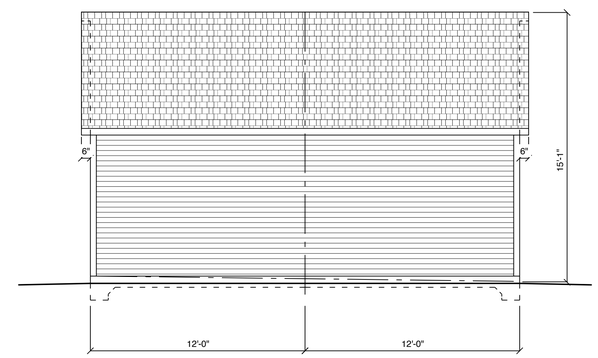

LEFT ELEVATION

SCALE: 1/4" = 1'-0"

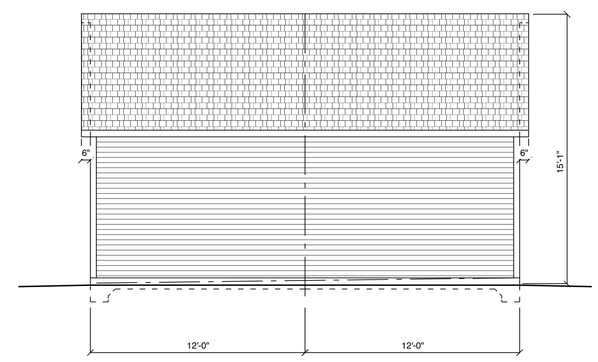

RIGHT ELEVATION

SCALE: 1/4" = 1'-0"

REVISIONS:

AMERICAN GARAGE BUILDERS-HEIPP
NEW CONSTRUCTION
305 E COLLEGE AVE
WAUKESHA, WI 53186

SHEET TITLE
PROPOSED FLOOR PLAN, BUILDING SECTION & EXTERIOR ELEVATIONS

DRAWN
GE

CHECKED
GE

DATE
24 MAY 2022

JOB NO.
2022.03.21

SHEET
A1

OF