2022A

poligon®

PROJECT: POCKET PARK

LOCATION: WAUKESHA, WI

BUILDING TYPE: SQR 24

ROOF TYPE: MULTI-RIB

BUILDING NUMBER: P14863

ORDER NUMBER: 73241

QUOTE NUMBER: 161563

DRAWING LIST:

SHEET NUMBER	DRAWING DESCRIPTION
CS	COVER SHEET
1	ARCHITECTURAL ELEVATIONS
2	STRUCTURAL FRAMING PLAN
3	COLUMN LAYOUT

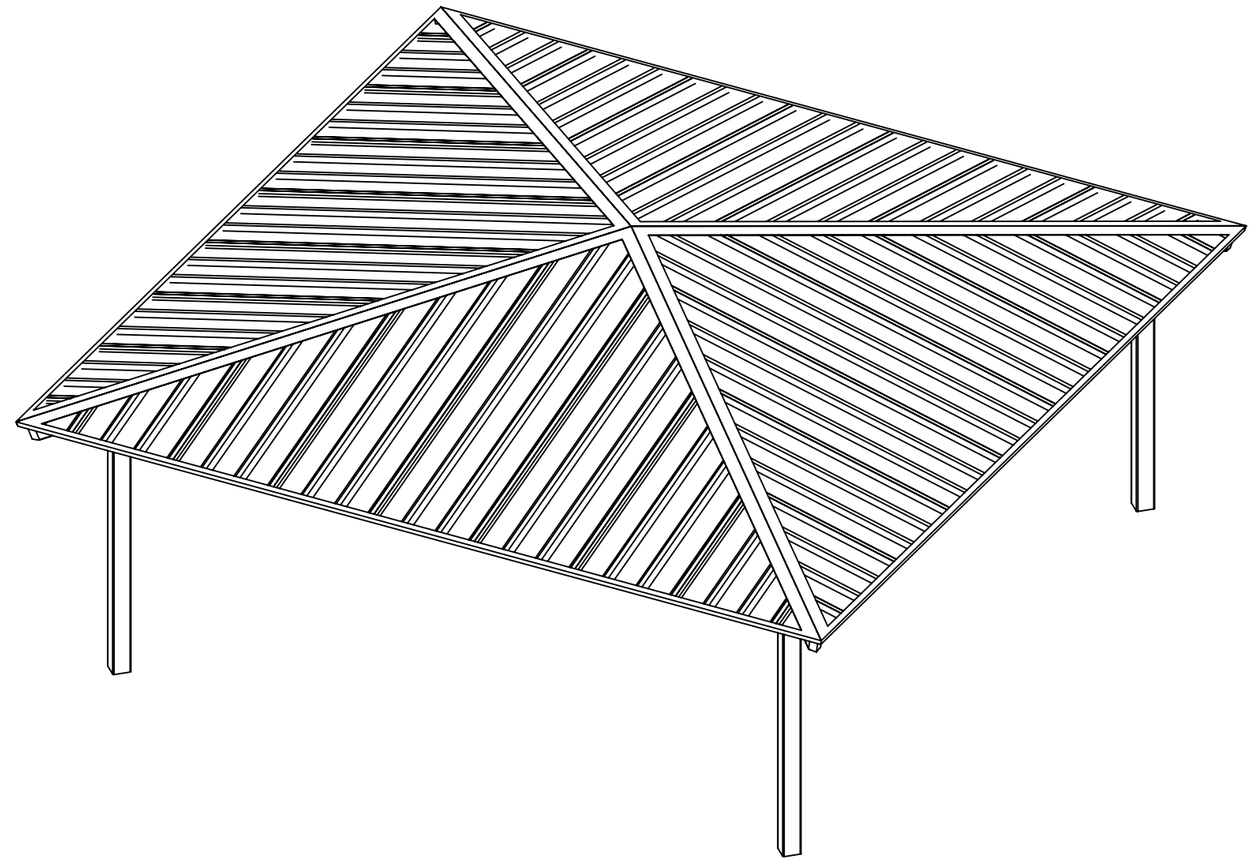

STOP!!

NOT FOR CONSTRUCTION

USE FOR PRELIMINARY PLANNING AND ESTIMATING ONLY

CERTIFICATES:
MIAMI-DADE COUNTY CERTIFICATE OF COMPETENCY NO. 21-0819.13
PCI (POWDER COATING INSTITUTE) 4000 CERTIFIED

FABRICATOR APPROVALS:
CITY OF PHOENIX, AZ APPROVED FABRICATOR #C08-2010
CITY OF LOS ANGELES, CA APPROVED FABRICATOR #FB01596
CITY OF RIVERSIDE, CA APPROVED FABRICATOR #SF_000042
CITY OF HOUSTON, TX APPROVED FABRICATOR #470
CLARK COUNTY, NV APPROVED FABRICATOR #264
STATE OF UTAH APPROVED FABRICATOR 02008-14
AISC APPROVED FABRICATOR C-00018751

MATERIALS:

DESCRIPTION	ASTM DESIGNATION
TUBE STEEL	A500 (GRADE B)
SCHEDULE PIPE	A53 (GRADE B)
RMT PIPE	A519
LIGHT GAGE COLD FORMED	A1003 (GRADE 50)
STRUCTURAL STEEL PLATE	A36
ROOF PANELS (STEEL)	A653

GENERAL NOTES:
UNLESS NOTED OTHERWISE, THIS STRUCTURE WAS DESIGNED TO ONLY SUPPORT WHAT IS SHOWN ON THESE DRAWINGS. THE MANUFACTURER MUST BE CONTACTED IF ANYTHING ELSE IS TO BE ATTACHED TO THIS STRUCTURE (WALLS, COLUMN WRAPS, RAILINGS, ETC.) SO THE DESIGN OF THIS STRUCTURE CAN BE REVIEWED AND POSSIBLY REVISED.

UNLESS NOTED OTHERWISE, THIS STRUCTURE WAS DESIGNED ASSUMING A 20' SEPARATION BETWEEN ANY ADJACENT STRUCTURE WITH AN EAVE HEIGHT EQUAL TO OR GREATER THAN THE EAVE HEIGHT OF THIS STRUCTURE. IF THAT SEPARATION DOES NOT EXIST, THE MANUFACTURER MUST BE CONTACTED SO THE DESIGN OF THIS STRUCTURE CAN BE REVIEWED AND POSSIBLY REVISED.

STRUCTURAL STEEL SHALL BE DETAILED, FABRICATED, AND ERECTED IN ACCORDANCE WITH THE LATEST EDITION OF THE AMERICAN INSTITUTE OF STEEL CONSTRUCTION (AISC) SPECIFICATION MANUAL.

ALL WELDING IS PERFORMED BY AMERICAN WELDING SOCIETY (AWS) CERTIFIED WELDERS AND CONFORMS TO THE LATEST EDITION OF AWS D1.1 OR D1.3 AS REQUIRED.

PARTS SHOWN MAY BE UPGRADED DUE TO STANDARDIZED FABRICATION. REFER TO THE SHIPPING BILL OF MATERIALS FOR POSSIBLE SUBSTITUTIONS.

FOR PROPER FIELD INSTALLATION OF THE BUILDING IT IS RECOMMENDED THAT THE PRIMARY FRAME INSTALLER AND THE ROOF INSTALLER HAVE A MINIMUM FIVE (5) YEARS DOCUMENTED EXPERIENCE INSTALLING THIS TYPE OF PRODUCT.

FOR PROPER FIELD INSTALLATION OF THE BUILDING IT IS RECOMMENDED THAT ELECTRIC WIRING, IF REQUIRED, BE RUN THROUGH THE STRUCTURAL MEMBERS BEFORE THE BUILDING IS ERECTED.

poligon® by PORTER CORP
WWW.POLIGON.COM
MAIN: (616) 888-3500
FIELD SUPPORT: (616) 888-3504

PRINT DATE: 6/28/2022
DRAWN BY: jacob.heller
REV LEVEL: A
JOB NO: P14863
SCALE: 1:48
CAD MODEL: ~E1-P14863

PROJECT: Pocket Park
PROJECT LOCATION: Waukesha, WI
DRAWING: COVER SHEET

SHEET
CS

GENERAL ROOF NOTES:

1. METAL ROOFING:
   - 24 GAUGE
   - GALVALUME COATED
   - KYNAR 500 PAINTED
2. TRIM COLOR MATCHES ROOF
3. SEE POLIGON.COM FOR COLOR OPTIONS

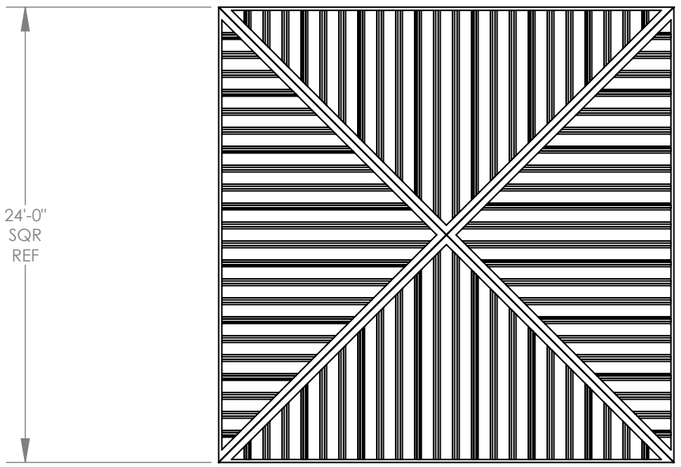

TOP VIEW

ISOMETRIC VIEW

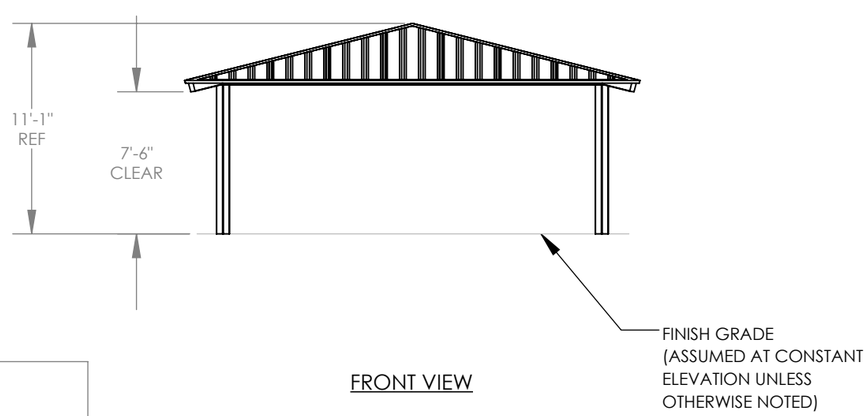

FRONT VIEW

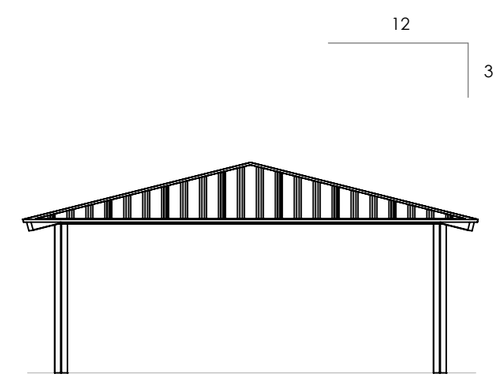

SIDE VIEW

STOP!!

NOT FOR CONSTRUCTION

USE FOR PRELIMINARY PLANNING AND ESTIMATING ONLY

poligon by PORTER CORP
WWW.POLIGON.COM
MAIN: (616) 888-3500
FIELD SUPPORT: (616) 888-3504

REV LEVEL:	A
SCALE:	1:96
DRAWN BY:	jacob.heller
PRINT DATE:	6/28/2022
JOB NO:	P14863
CAD MODEL:	~E1-P14863
PROJECT:	Pocket Park
PROJECT LOCATION:	Waukesha, WI
DRAWING:	ARCHITECTURAL ELEVATIONS
SHEET	1

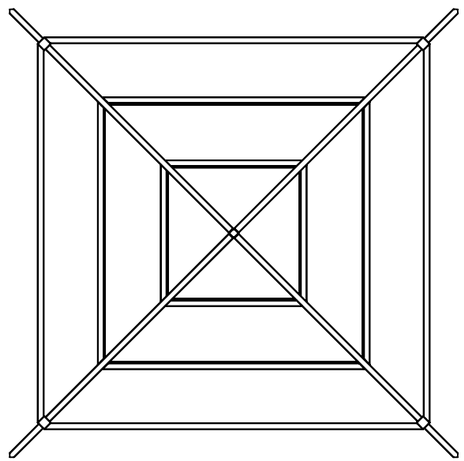

TOP VIEW

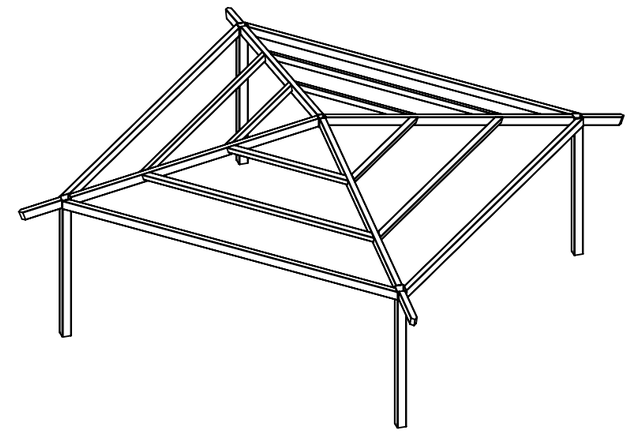

ISOMETRIC VIEW

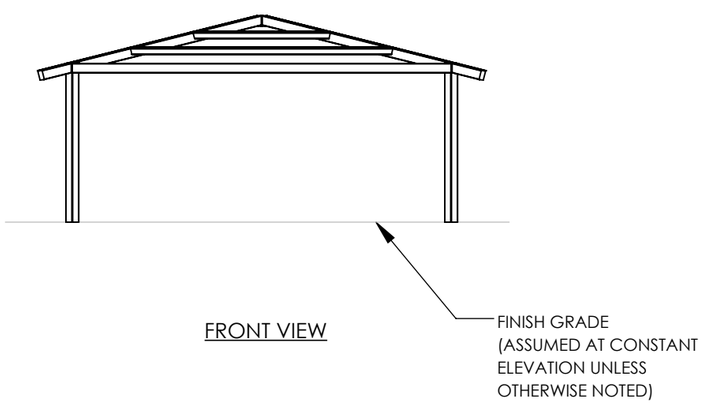

FRONT VIEW

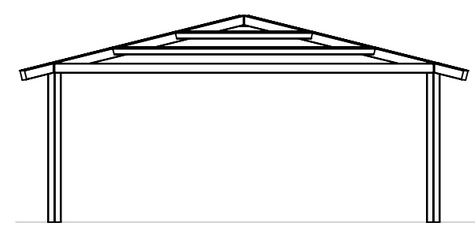

SIDE VIEW

STOP!!
NOT FOR CONSTRUCTION

USE FOR PRELIMINARY PLANNING AND ESTIMATING ONLY

poligon®
by PORTER CORP
WWW.POLIGON.COM
MAIN: (616) 888-3500
FIELD SUPPORT: (616) 888-3504

PRINT DATE: 6/28/2022
REV LEVEL: A
DRAWN BY: jacob.heller
SCALE: 1:96
JOB NO.: P14863
CAD MODEL: ~E1-P14863
PROJECT: Pocket Park
PROJECT LOCATION: Waukesha, WI
DRAWING: STRUCTURAL FRAMING PLAN
SHEET
2

ANCHOR BOLT LAYOUT NOTES:

1. ENGINEERING WILL DETERMINE REQUIRED ANCHOR BOLT LAYOUT AFTER ENGINEERING PACKAGE IS ORDERED.
2. CUSTOMER MAY SUGGEST PREFERRED ANCHOR BOLT LAYOUT.

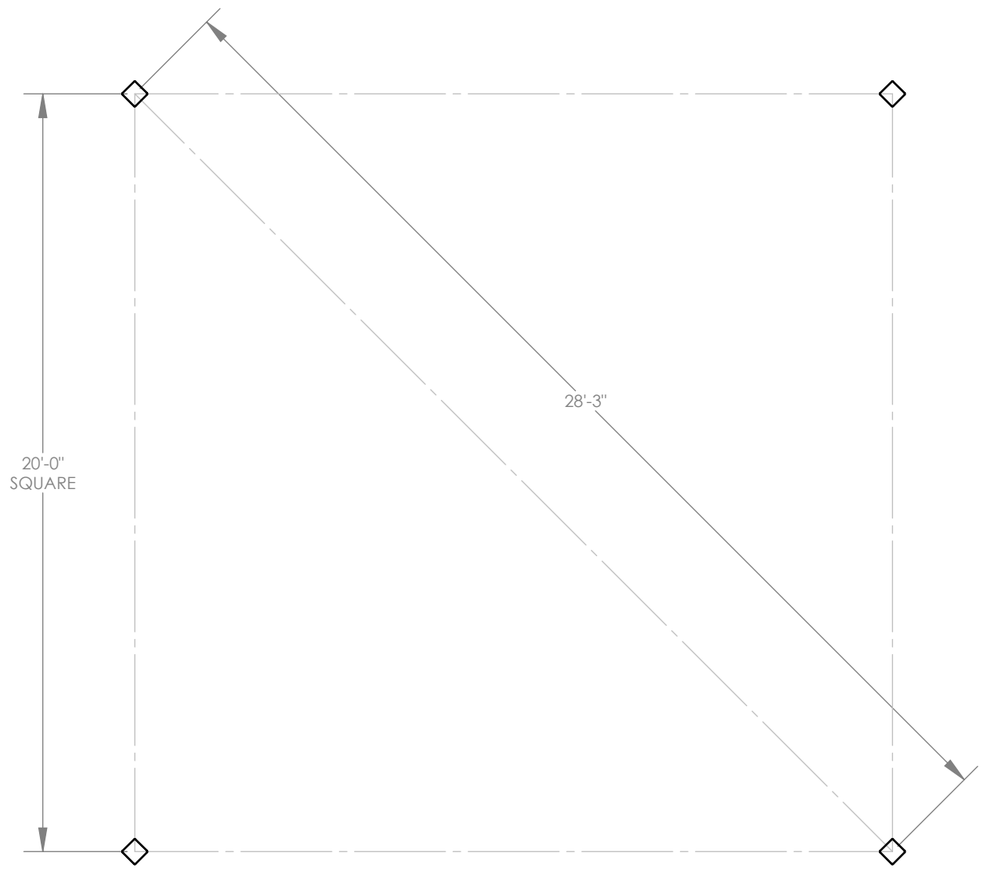

STOP!!
NOT FOR CONSTRUCTION

USE FOR PRELIMINARY PLANNING AND ESTIMATING ONLY

poligon®
by PORTER CORP
WWW.POLIGON.COM
MAIN: (616) 888-3500
FIELD SUPPORT: (616) 888-3504

PROJECT: Pocket Park
PROJECT LOCATION: Waukesha, WI
DRAWING: COLUMN LAYOUT
SHEET 3

PRINT DATE: 6/28/2022
JOB NO: P14863
CAD MODEL: ~E1-P14863

DRAWN BY: jacob.heller
REV LEVEL: A
SCALE: 1:48

poligon®

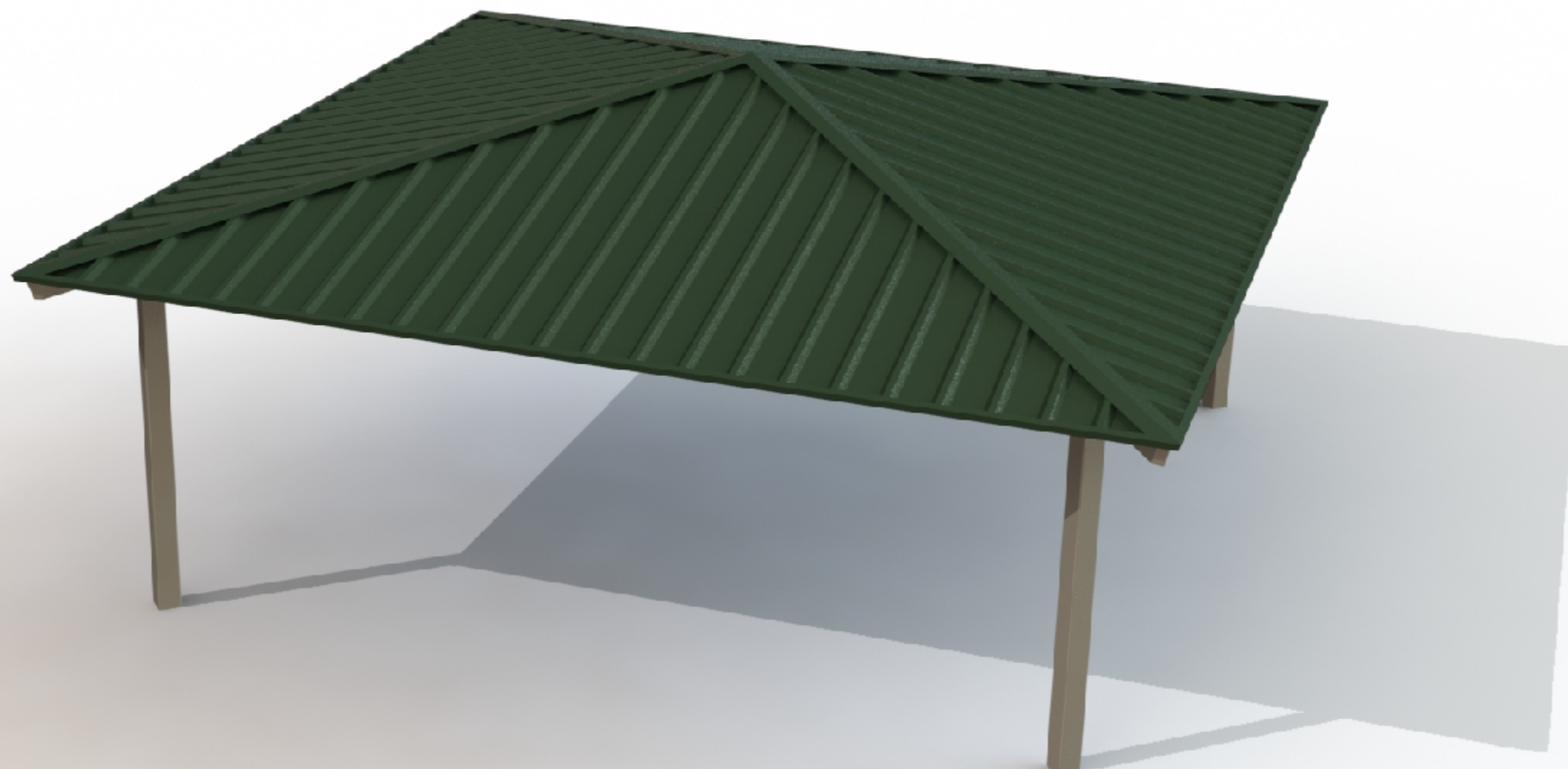

FRAME COLOR: **SURREY BEIGE**
ROOF COLOR: **EVERGREEN**
COLORS SHOWN ARE FOR REFERENCE ONLY.
CONTACT INFO@POLIGON.COM TO REQUEST ACTUAL COLOR SAMPLES.

Pocket Park
Waukesha, WI
SQR 24