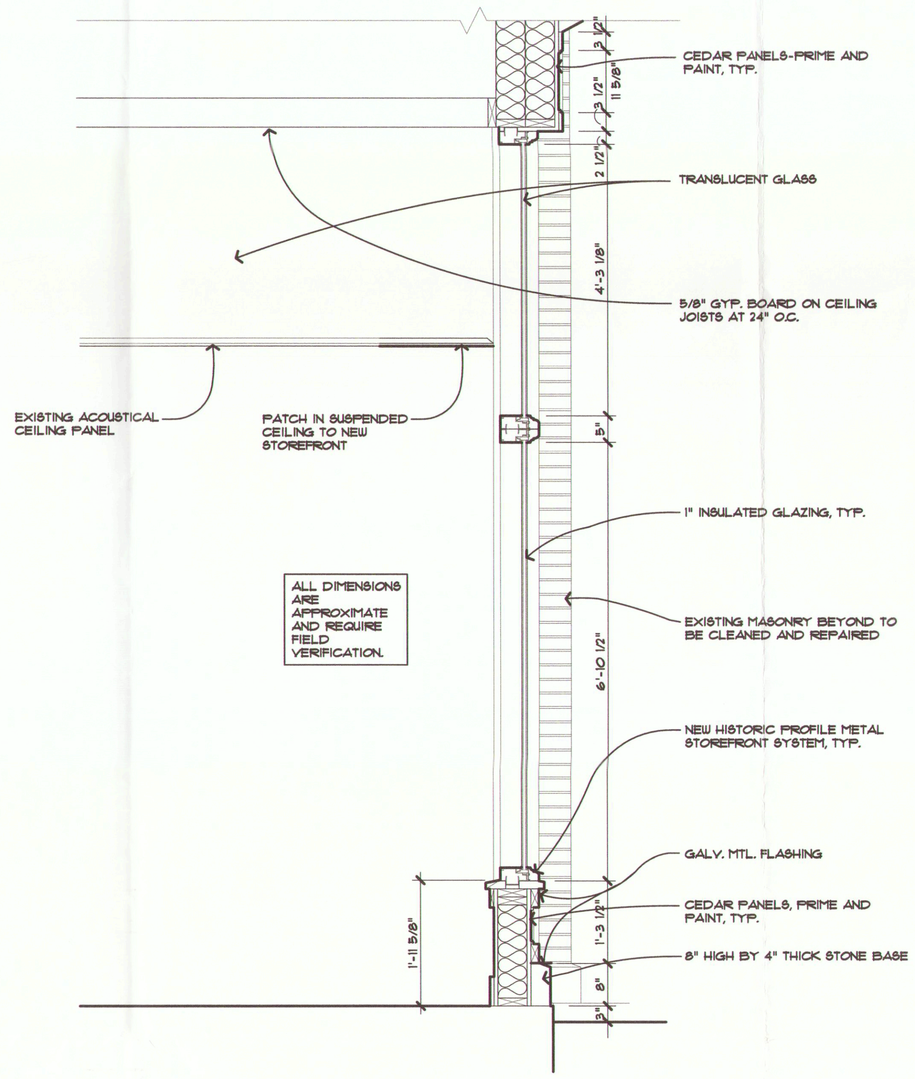

SECTION AT STOREFRONT 3/4"=1'-0" 13

EXISTING ELEVATION 4

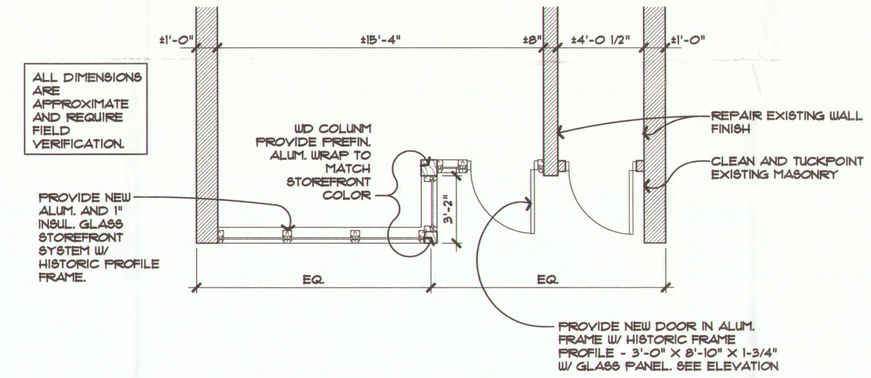

PAINT COLOR SCHEDULE

1. GREEN: SHERWIN WILLIAMS, #SW2848 ROYCROFT PEWTER
2. BLUE: SHERWIN WILLIAMS, #SW2819 DOWNING SLATE
3. YELLOW: SHERWIN WILLIAMS, #SW2853 COLONIAL YELLOW
4. EFCO (WINDOW PREFIN.): ANTIQUE WHITE #131A427

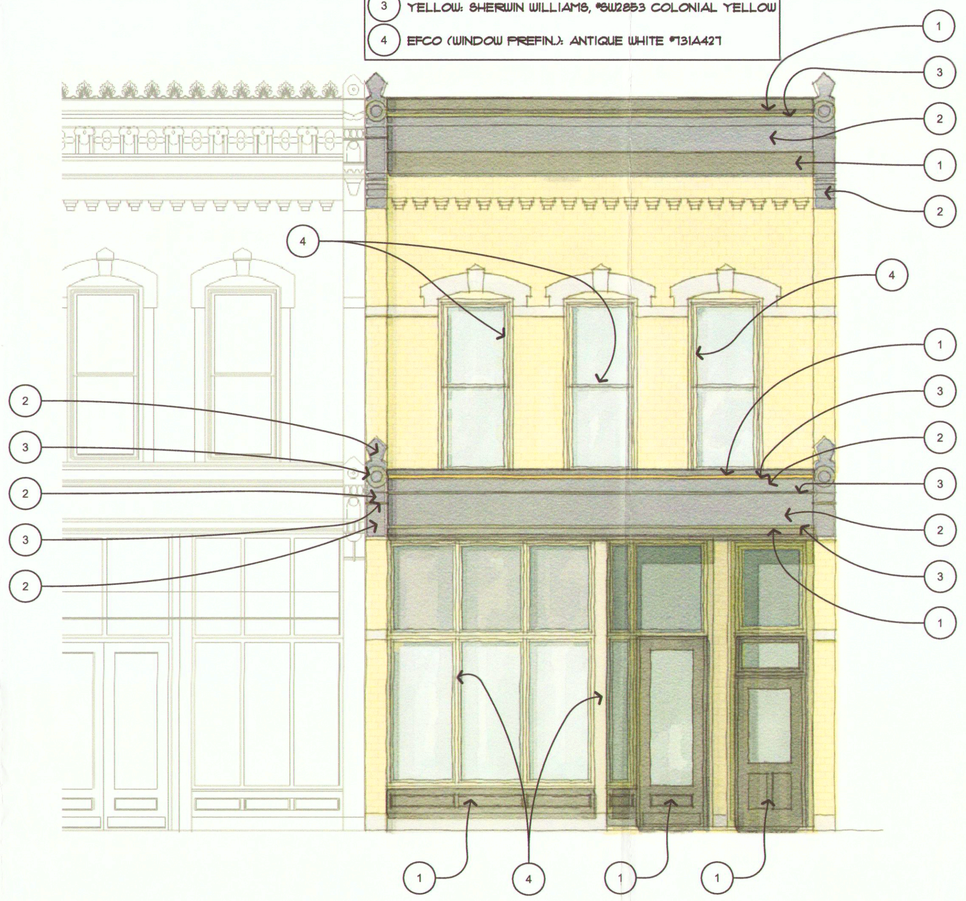

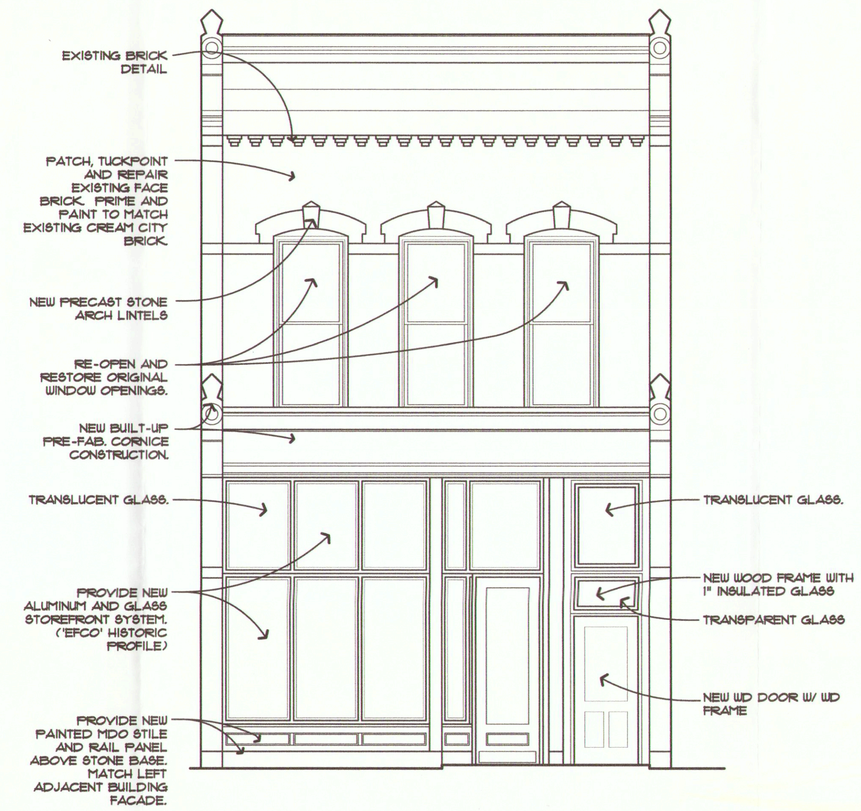

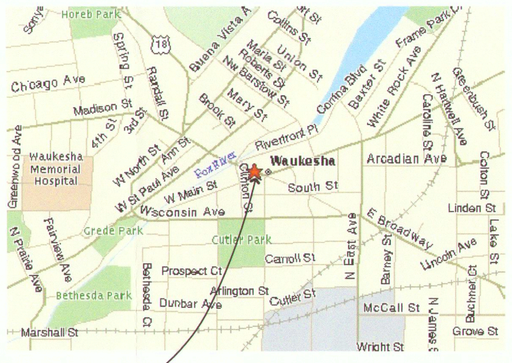
Horeb Park
Chicago Ave
Madison St
Waukesha Memorial Hospital
Waukesha
Arcadian Ave
South St
W Main St
Wisconsin Ave
Cutler Park
Carroll St
Prospect Ct
Arlington St
Dunbar Ave
Cutler St
Bethesda Park
Marshall St
Wright St
McCall St
Grove St
Lindon St
Lincoln Ave
Lake St
Gibson St
Grand Ave
Frame Park
Riverfront Pl
Baxter St
Mary St
Madison St
Rankin St
Spring St
Bluma Vista A
Cutler St
Carroll St
Prospect Ct
Arlington St
Dunbar Ave
Cutler St
Bethesda Pl
Marshall St
Wright St
McCall St
Grove St
Lindon Ave
Lake St
Gibson St
Bachelor St
E Broadway
N East Ave
Barney St
Arcadian Ave
Gate Court St
N Hartwell Ave