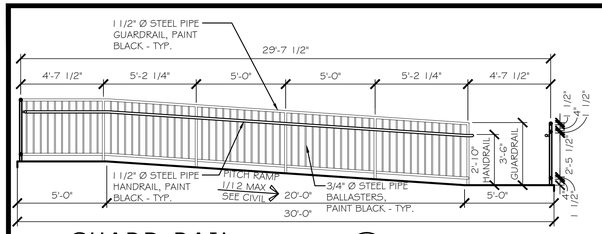

GUARD RAIL
SCALE: 1/4" = 1'-0" (14 / SP2.1)

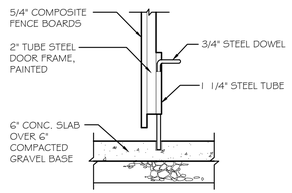

DETAIL
SCALE: 3/4" = 1'-0" (10 / SP2.1)

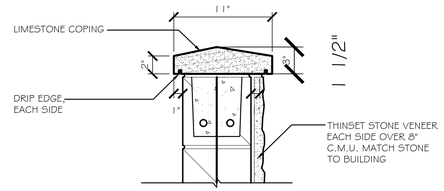

LIMESTONE CAP
SCALE: 1 1/2" = 1'-0" (6 / SP2.1)

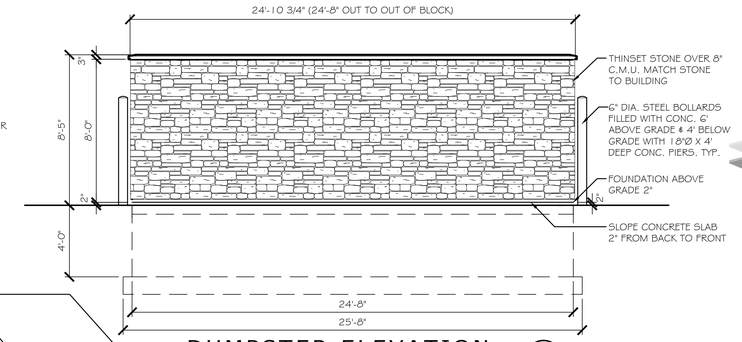

DUMPSTER ELEVATION
SCALE: 1/4" = 1'-0" (3 / SP2.1)

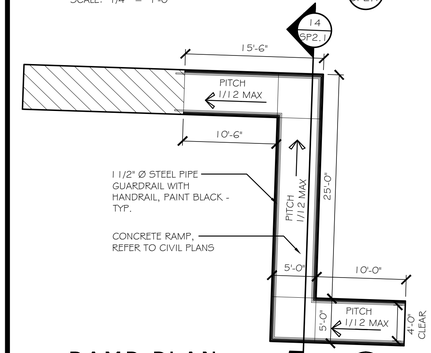

RAMP PLAN
SCALE: 1/8" = 1'-0" (13 / SP2.1)

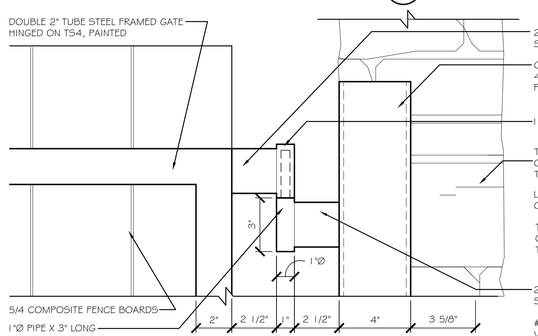

HINGE DETAIL - ELEV.
SCALE: 3" = 1'-0" (9 / SP2.1)

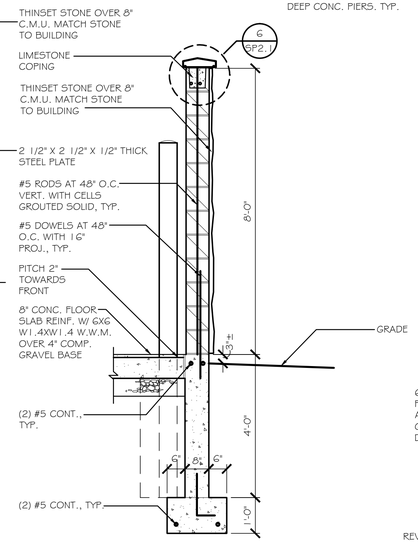

DUMPSTER SECTION
SCALE: 1/2" = 1'-0" (5 / SP2.1)

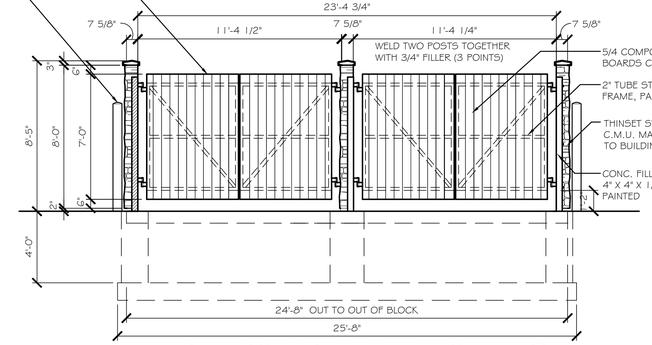

DUMPSTER ELEVATION
SCALE: 1/4" = 1'-0" (2 / SP2.1)

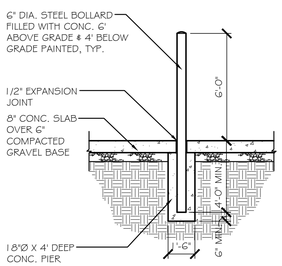

BOLLARD
SCALE: 1/4" = 1'-0" (12 / SP2.1)

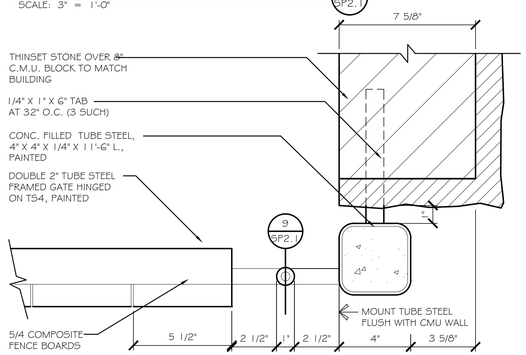

HINGE DETAIL - PLAN
SCALE: 3" = 1'-0" (8 / SP2.1)

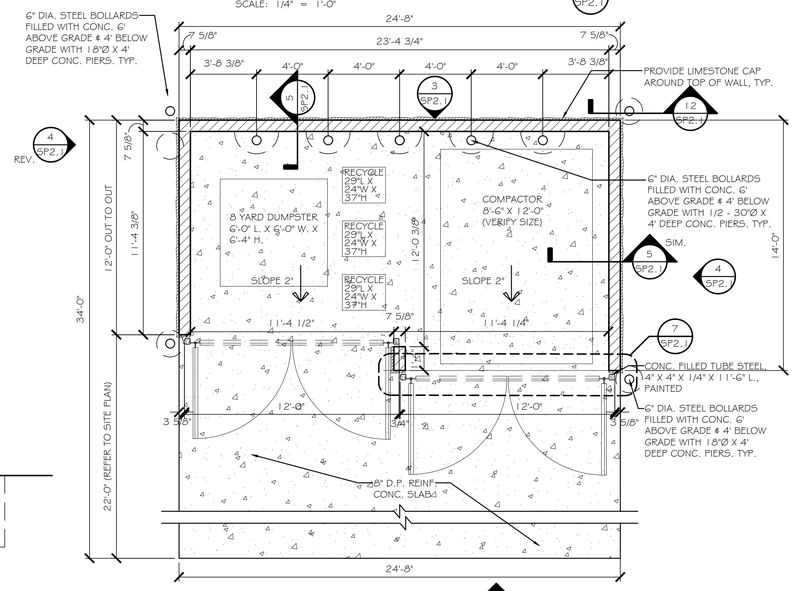

DUMPSTER PLAN
SCALE: 1/4" = 1'-0" (2 / SP2.1) (1 / SP2.1)

NORTH

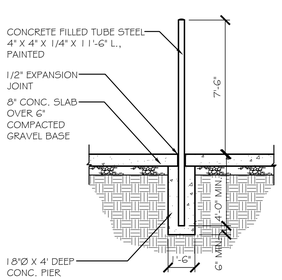

GATE POST
SCALE: 1/4" = 1'-0" (11 / SP2.1)

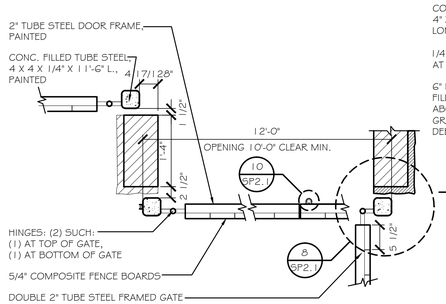

GATE DETAIL
SCALE: 3/4" = 1'-0" (7 / SP2.1)

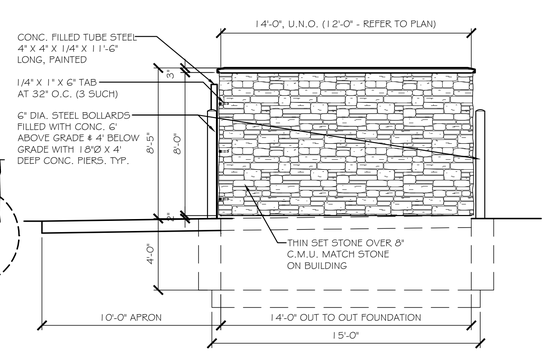

DUMPSTER ELEVATION
SCALE: 1/4" = 1'-0" (4 / SP2.1)

CONSTRUCTION DOCUMENTS

© 2018
This print is the sole property of RMA Architects, Inc. Any reproduction, copying, or use is strictly prohibited without written permission.

RMA ARCHITECTS
1050 SOUTH GRIDER STREET
APPLETON, WISCONSIN 54914
PHONE: 920-364-9850

PROJECT FOR ALLIANCE DEVELOPMENT:
STARBUCKS/FUTURE DEVELOPMENT
LES PAUL PARKWAY / S.T.H. 164
WAUKESHA, WISCONSIN 53186

Alliance DEVELOPMENT

REVISIONS

DRAWN BY LAK
CHECKED BY TFM

DATE 10/12/18

PROJECT NO. 185016

SP2.1