NOTE: THE EXISTING CONDITIONS SURVEY WAS CONDUCTED BY METROPOLITAN SURVEY SURVICE, INC. DATED DECEMBER 2018.

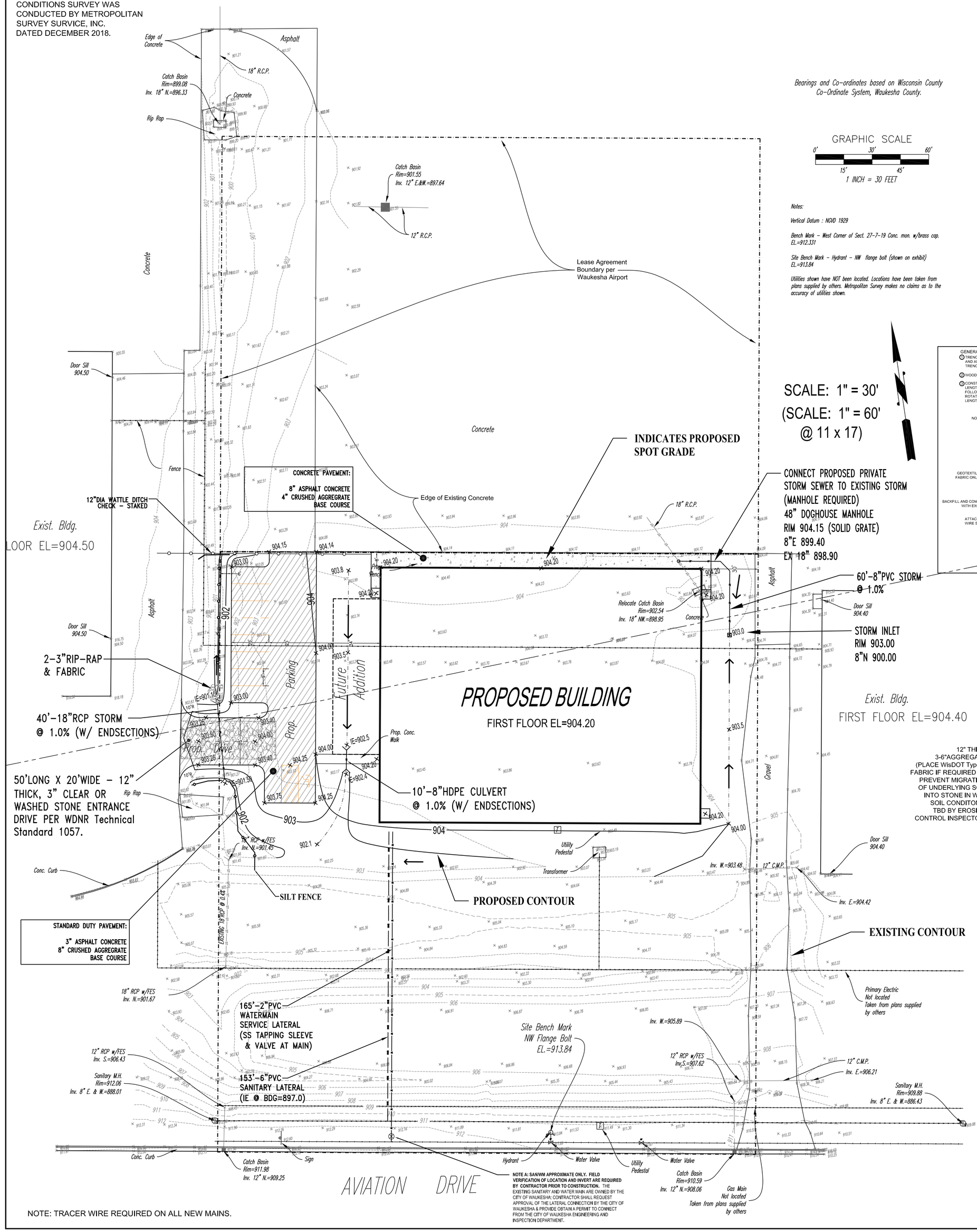

NOTE A: SANNNN APPROXIMATE ONLY. FIELD VERIFICATION OF LOCATION AND INVERT ARE REQUIRED BY CONTRACTOR PRIOR TO CONSTRUCTION. THE EXISTING SANITARY AND WATER MAIN ARE OWNED BY THE CITY OF WAUKESHA. CONTRACTOR SHALL REQUEST APPROVAL OF THE LATERAL CONNECTION BY THE CITY OF WAUKESHA & PROVIDE OBTAIN A PERMIT TO CONNECT FROM THE CITY OF WAUKESHA ENGINEERING AND INSPECTION DEPARTMENT.

NOTE: TRACER WIRE REQUIRED ON ALL NEW MAINS.

Bearings and Co-ordinates based on Wisconsin County Co-Ordinate System, Waukesha County.

GRAPHIC SCALE

0' 30' 60'

15' 45'

1 INCH = 30 FEET

Notes:

Vertical Datum : NGVD 1929

Bench Mark - West Corner of Sect. 27-7-19 Conc. mon. w/brass cap. EL.=912.331

Site Bench Mark - Hydrant - NW flange bolt (shown on exhibit) EL.=913.84

Utilities shown have NOT been located. Locations have been taken from plans supplied by others. Metropolitan Survey makes no claims as to the accuracy of utilities shown.

SCALE: 1" = 30'

(SCALE: 1" = 60' @ 11 x 17)

PRIVATE WATER MAIN, SANITARY & STORM SEWER SPECIFICATIONS:

1. All work shall be in accordance with the Standard Specifications for Highway and Structure Construction, State of Wisconsin, Latest Edition; the State of Wisconsin Standard Specifications for Sewer and Water Construction in Wisconsin, the State of Wisconsin Department of Safety and Professional Services Plumbing Code; and the City of Waukesha Ordinances.

2. The private water main, sanitary & storm sewer design, permitting, construction, installation, supervision, maintenance, inspection AND testing shall be in accordance with State of Wisconsin, Chapter SPS 382. All permits must be obtain by the contractor prior to commencing work.

3. Private sanitary laterals shall be PVC (solid wall), ASTM D-3034, DR-35 or 28; or PVC (solid wall), AWWA C-900 per the State of Wisconsin Plumbing Code, Chapter SPS 382 and the Standard Specifications for Sewer & Water Construction in Wisconsin.

4. Private Water main laterals shall be PVC (solid wall), AWWA C-900, CLASS 235, DR-18 with Push-On type integral elastomeric bell-spigot joints per the State of Wisconsin Plumbing Code, Chapter SPS 382 AND the Standard Specifications for Sewer & Water Construction in Wisconsin.

5. Private Storm Sewers shall be PVC (solid wall), DR-26 OR HDPE, per the State of Wisconsin Plumbing Code, Chapter SPS 382. Storm manholes shall be precast concrete in accordance with File No. 26 of the Standard Specifications for Sewer & Water Construction in Wisconsin with a Neenah No. R2471 frame & grate. Manhole diameter sized per File No. 12. Storm inlets shall be precast concrete box structures in accordance with File No. 29 of the Standard Specifications for Sewer & Water Construction in Wisconsin with a Neenah No. R3227-C frame & grate or EQUAL.

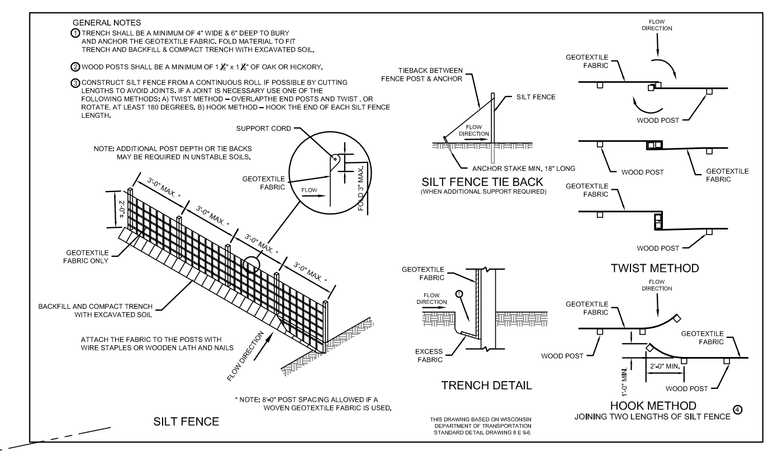

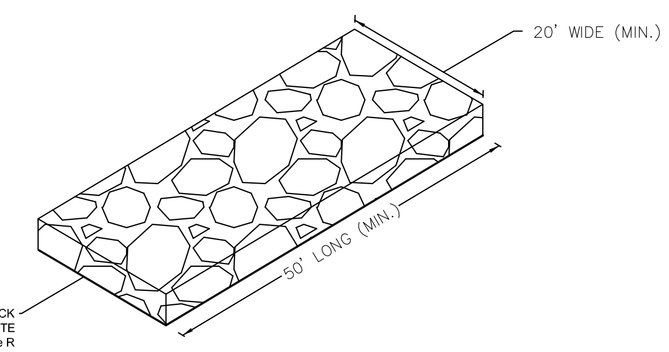

STONE TRACKING PAD

PER WDNR TECH STANDARD 1057

(NOT TO SCALE)

NOTE:

THIS PROJECT SHALL FOLLOW ALL REQUIREMENTS WITHIN THE WAUKESHA COUNTY STORM WATER MANAGEMENT & EROSION CONTROL ORDINANCE.

TOTAL PROPOSED DISTURBED AREA = <43,560sf

(new swm permit required - from Waukesha County).

EROSION CONTROL SPECIFICATIONS AND CONSTRUCTION SEQUENCING:

I, _____, _____

OWNER'S REPRESENTATIVE DATE

have read and understand this narrative. I also understand that failure to follow the approved narrative may be subject to enforcement action.

The timing and sequence of construction is scheduled as follows (see attached map):

1. Before grading begins the project surveyor will stake out the property lines, silt fence and parking lot corners. The general contractor is charged with installing and maintaining all silt fences, seeding and other erosion control practices.
2. A list of all project contacts, phone numbers, e-mail addresses, etc. are on the plan & permit application.
3. Construction is scheduled to begin on or about _____.
4. The gravel tracking pad will be installed at the entrance first.
5. Silt fence shall be installed as shown on the plan.
6. Install entrance culvert, storm and rough grade the site. Haul excess material offsite. Construct footings and place stone over entire parking area. Install inlet protection and restore disturbed areas with erosion control matting upon completion.
7. Erosion control inspections will be performed weekly and after each rain event of 0.5 inches or larger by the grading contractor and inspection forms will be filled out and kept on site in job trailer.
8. Complete the parking lot after May, 2019.
9. Construction completion is anticipated by _____.
10. Any disturbed site that remains inactive for greater than 7 days shall be stabilized with temporary measures such as soil treatment, temporary seeding or mulching. "Inactive" means that no site grading, landscaping or utility work is occurring on the site and that rain is not limiting these activities. Frozen soils do not exclude the site from this requirement.
11. Restoration of all disturbed areas will be stabilized in accordance with the late season stabilization specifications listed below.
12. After grass areas are well established, request final inspection by the county to remove the site fence.
13. Seeding rates and mixes for non-field areas shall conform to WisDOT Roadway Standard Section 630.

Late Season Stabilization Requirements for Sites >1 Acre

1. Vegetated Channels (roadside swales and other stormwater conveyances): All planned vegetated channels shall be treated with soil stabilization BMPs (i.e. erosion control matting, turf reinforcement mat, sod, riprap, soil stabilizers, etc.) by no later than November 15 in accordance with DNR technical standards and the criteria listed below. Ditch checks, sediment traps, silt fence and other sediment control BMPs are used only during grading work, and must be replaced with soil stabilization BMPs per the approved plans ASAP. None of the sediment control BMPs are acceptable for open channels over winter.
2. Timing Determines Requirements and BMPs: Soil stabilization BMPs are organized in three risk categories.
   a. Risk Level 1: Permanent Vegetation (before September 15): Topsoil, seed and fertilize all disturbed areas by September 15 in accordance with the following:
      i. Seeding. Prepare seedbed and sow seeds per the rates and mixes of Wisconsin Department of Transportation (WisDOT) Roadway Standard Section 630.
      i. Erosion Control: Immediately apply mulch, erosion control matting, turf reinforcement mat, sod, riprap, soil stabilizers, or other soil stabilization BMPs as specified in the approved erosion control plans. Application of all BMPs shall follow DNR technical standards.
      ii. Maintenance: Inspect all seeded areas weekly. Ensure adequate water is provided until full vegetative cover is obtained, and repair any erosion problems, wash outs, etc.
   b. Risk Level 2: Temporary Vegetation (before October 15): Topsoil, seed and fertilize all disturbed areas by October 15 in accordance with the following:
      i. Seeding: The above noted seeding mix must include a minimum of 2 lbs. per 1,000 sq. ft. of a temporary cover (i.e. winter wheat or annual rye grass for fall plantings) per WisDOT Roadway Standard Section 630.
      ii. Erosion Control: Immediately apply mulch, erosion control matting, turf reinforcement mat, sod, riprap, soil stabilizers, or other soil stabilization BMPs as specified in the approved erosion control plan, following DNR technical standards. The following are minimum requirements for stabilizing sites during this period. Approved plans may be more restrictive due to site conditions:
      iii. Maintenance: Inspect all seeded areas weekly. Ensure adequate water is provided until full temporary cover is obtained, and repair any erosion problems, wash outs, etc.
   c. Risk Level 3: Dormant Seeding (before November 15): Topsoil, seed and fertilize all disturbed areas by November 15 in accordance with the following:
      i. Seeding Rate: Same seed mix as Risk Level 2 (including temporary cover crop) except the rates for perennial species must be applied at 1.5 x WisDOT section 630 rates (apply rates of 3-5 lbs./1000 sq.ft.). Rates are increased to allow for poor germination rates associated with dormant seeding due to frozen conditions.
      ii. Erosion Control: In addition to applying topsoil, the above noted seed mix and starter fertilizer, the following are minimum requirements for stabilizing sites during this period. Approved erosion control plans may be more restrictive:
      iii. Maintenance: Inspect all seeded areas weekly. Ensure adequate water is provided until full temporary cover is obtained, and repair any erosion problems, wash outs, etc.
      iv. Reports: The Project Engineer shall be responsible for emailing a report to the LRD by 4:30 pm every Wednesday after October 15, which shall include the following information:

1. Channel Flow (roadside swales, etc.) and Backslopes: Apply Type B Soil Stabilizer, mulch and tackifier from the WisDOT Product Acceptability List to all disturbed areas that remain exposed.
3. Infalls/Outfalls: Install sod pads (2 rolls) at all culvert outfalls, and other high-erosion locations in accordance with County standards.

1. Channel Flow (roadside swales, etc.) and Backslopes: Apply Type A soil stabilizer and staked PAL Class 3 erosion matting over the entire channel bottom up to a 10-year 24-hour flow depth. All channel back slopes must be treated with Class II, Type A soil erosion control matting.
2. Other Areas: Apply Type A Soil Stabilizer from the WisDOT Product Acceptability List to all other disturbed areas that remain exposed.
3. Infalls/Outfalls: Install sod pads (2 rolls) at all culvert outfalls, and other high-erosion locations in accordance with County standards.

1. Detailed status of all land disturbing and soil stabilization activities as of the day of the report.
2. Results of erosion control site inspections since October 15 or the previous report, whichever is shorter.
3. Any erosion control failures encountered and actions taken to rectify.
4. Projections for completion of all stabilization activities, including a 10-day plan based on the latest weather predictions

TEMPORARY SEED MIX PER WDNR TECHNICAL STANDARD 1059:
Temporary Seeding Species and Rates

Species	Lbs/Acre	Percent Purity
Oats	1311(1)	98
Cereal Rye	1312(2)	97
Winter wheat	1312(2)	95
Annual Ryegrass	802(2)	97

1 Spring and summer seeding
2 Fall seeding

THE UNDERGROUND UTILITY INFORMATION AS SHOWN HEREON IS BASED, IN PART, UPON INFORMATION FURNISHED BY UTILITY COMPANIES AND THE LOCAL MUNICIPALITY. WHILE THIS INFORMATION IS BELIEVED TO BE RELIABLE, ITS ACCURACY AND COMPLETENESS CANNOT BE GUARANTEED NOR CERTIFIED TO.

DIGGER'S HOTLINE CALL BEFORE YOU DIG 811

WISCONSIN MARK R. ELLENA E-24090 WALES, WI PROFESSIONAL ENGINEER

EEC ELLENA ENGINEERING CONSULTANTS, LLC
SITE CIVIL ENGINEERING & STORMWATER MANAGEMENT
Ellena Engineering Consultants, LLC • 700 Pilgrim Parkway - Suite 100 • Elm Grove, WI 53122
Phone: 262-719-6183 • Fax: 866-457-2584 • Email: mellena@eeceng.com

GRADING, PAVING & UTILITY PLAN

Keller™
PLANNERS | ARCHITECTS | BUILDERS

FOX CITIES
N216 State Road 55 P.O. Box 620
Kaukauna, WI 54130
PHONE (920) 766-5795 or 1-800-236-2534
FAX (920) 766-5004

MILWAUKEE
W177 N8656 Rivercrest Dr. Suite 104
Germantown, WI 53022
PHONE (262) 250-9710 1-800-236-2534
FAX (262) 250-9740

WAUSAU
2620 Stewart Avenue Suite 314
Wausau, WI 54401
PHONE (715) 849-3141
FAX (715) 849-3181

www.kellerbuilds.com

PROPOSED FOR:

STEINS AIRCRAFT SERVICES

CITY OF WAUKESHA WISCONSIN

"COPYRIGHT NOTICE"
This design, drawing and detail is the copyrighted property of KELLER, INC. No part hereof shall be copied, duplicated, distributed, disclosed or made available to anyone without the expressed written consent of KELLER, INC.

PROJECT MANAGER: S. LAUSTEN

ARCHITECT:

DRAWN BY:

EXPEDITOR:

SUPERVISOR:

PRELIMINARY NO:

CONTRACT NO:

DATE: 01-08-18

SHEET: C100