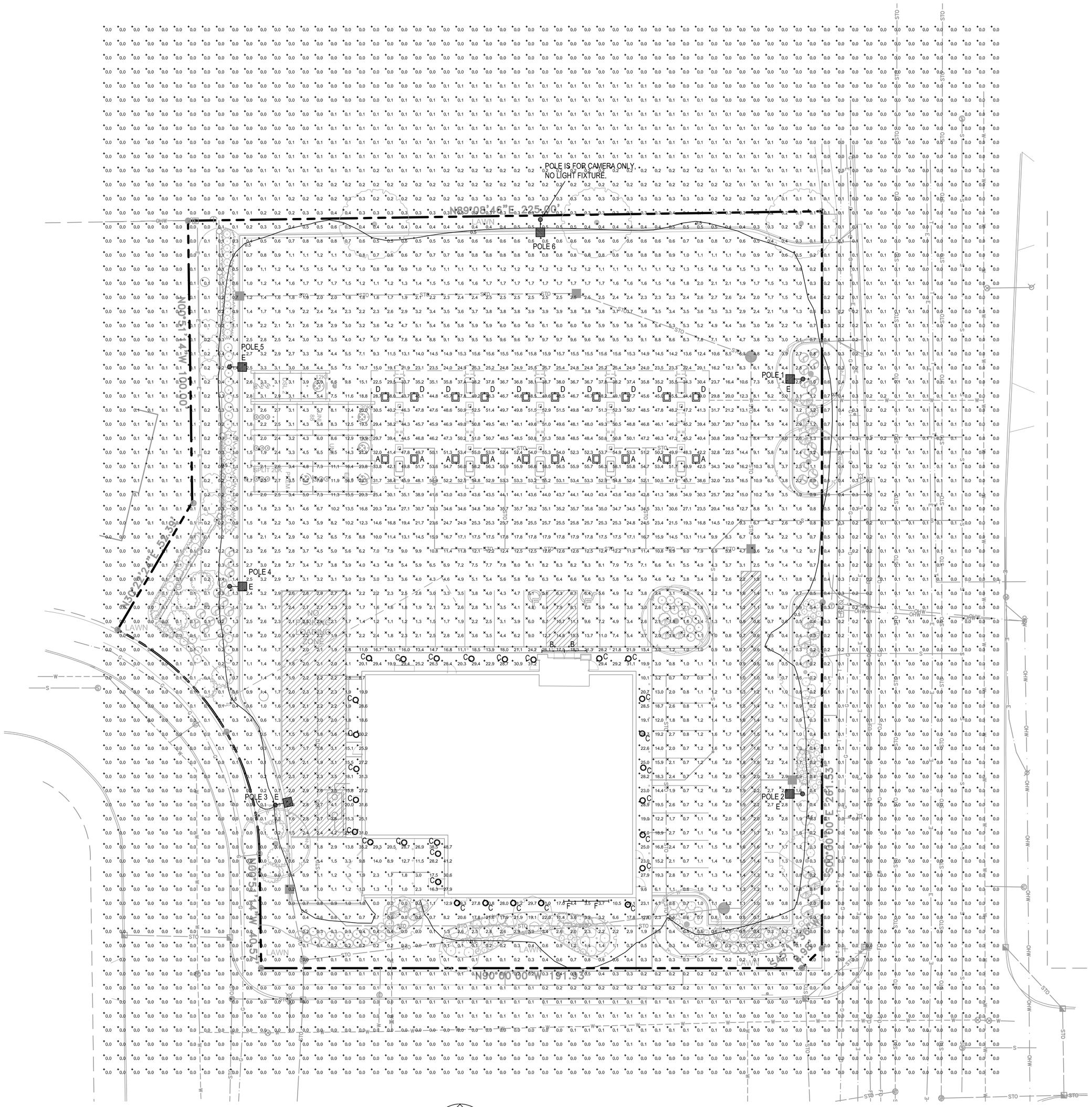

PHOTOMETRIC SITE PLAN

SCALE: 1" = 20'-0"

CALCULATION STATISTICS

OVERALL SITE:		PARKING-LOADING-CIRCULATING:	
AVERAGE:	4.5	AVERAGE:	4.1
MAXIMUM:	58.5	MAXIMUM:	17.9
MINIMUM:	0.0	MINIMUM:	0.4
MAX/MIN:	N/A	MAX/MIN:	44.8:1
AVE/MIN:	N/A	AVE/MIN:	10.3:1

NOTE:

FOOTCANDLE LEVELS SHOWN ON THIS PLAN ARE CALCULATED AT GRADE LEVEL.

FIXTURE QUANTITIES

A - 10
B - 2
C - 29
D - 10
E - 5
F - 2

PROVIDE (6) 16' POLES.

FIXTURE SYMBOLS:

A & D — LED LIGHT MOUNTED UNDER FUEL CANOPY

B & F — LED STRIP LIGHT MOUNTED IN GABLE

C — RECESSED LED DOWNLIGHT

E — POLE MOUNTED LED FIXTURE

FIXTURE TYPES:

A - LSI LIGHTING: SCV-LED-23L-SCFT-UNV-DIM-40-WHT (COLOR TEMPERATURE IS 4000K)
MOUNTED UNDER GAS CANOPY
MOUNT FIXTURES WITH FORWARD THROW OPTIC AIMING AT STORE FRONT.

B - LED STRIP LIGHT MOUNTED IN GABLE
LITHONIA -TZL1N-L96-35K (COLOR TEMPERATURE IS 3500K)

C - RECESSED LED DOWNLIGHT
GOTHAM EVO-35/30-8AR-WD-120-TRW (COLOR TEMPERATURE IS 3500K)

D - LSI LIGHTING: SCV-LED-15L-SC-UNV-DIM-40-WHT (COLOR TEMPERATURE IS 4000K)
MOUNTED UNDER GAS CANOPY

E - LSI LIGHTING: SLM-LED-9L-SIL-FT-UNV-40-70CRI-WHT-IL (COLOR TEMPERATURE IS 4000K)

F - LED STRIP LIGHT MOUNTED IN GABLE
LITHONIA -TZL1N-L96-35K (COLOR TEMPERATURE IS 3500K)
FIXTURE IS SHOWN DIMMED DOWN TO 20%.

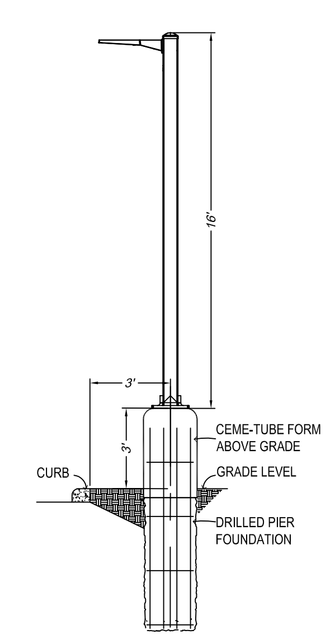

LOT LIGHT ELEVATION DETAIL

NOT TO SCALE

POLE 6 IS FOR CAMERA ONLY. NO LIGHT FIXTURE.

2020-0195.04

GRAEF
275 West Wisconsin Avenue, Suite 300
Milwaukee, WI 53203
414 / 259 1500
414 / 259 0037 fax

KWIK TRIP

KWIK STAR

KWIK TRIP, Inc.
P.O. BOX 2107
1626 OAK STREET
LA CROSSE, WI 54602-2107
PH. (608) 781-8988
FAX (608) 781-8960

raSmith
CREATIVITY BEYOND ENGINEERING
16745 W. Bluemound Road
Brookfield, WI 53005-5938
(262) 781-1000
rasmith.com

PHOTOMETRIC SITE PLAN

CONVENIENCE STORE #527

1700 PEWAUKEE RD
WAUKESHA, WI

#	DATE	DESCRIPTION

DRAWN BY	AVM
SCALE	GRAPHIC
PROJ. NO.	3190494
DATE	2019-12-20
SHEET	E1