PROJECT :

RUSS DARROW KIA OF WAUKESHA

2141 EAST MORELAND BLVD
WAUKESHA, WI

CONSTRUCTION MANAGER :

PROFESSIONAL CONSULTANTS, INC.

133 HILL STREET
HARTLAND, WISCONSIN
(414) 367-6080

ARCHITECT :

TDI ASSOCIATES, INC.

ARCHITECTURE & PLANNING

25217 SOUTH WIND LAKE ROAD
WIND LAKE, WISCONSIN
TEL: (262) 409-2530

GENERAL NOTES:

1. THE ARCHITECT/ENGINEER MAINTAINS NO RESPONSIBILITY FOR THE GENERAL CONTRACTOR, SUBCONTRACTORS, OR THOSE WORKING IN SUCH CAPACITIES; FOR THE METHODS USED, OR LACK THEREOF, IN THE EXECUTION OF THE WORK AND SAFETY PROCEDURES AND PRECAUTIONS TAKEN AT THE PROJECT SITE.
2. CONTRACTORS SHALL ASSUME FULL RESPONSIBILITY - UNRELIEVED BY REVIEW OF SHOP DRAWING NOR BY SUPERVISION OR PERIODIC OBSERVATION OF CONSTRUCTION FOR COMPLIANCE WITH THE CONTRACT DOCUMENTS - FOR DIMENSIONS TO BE CONFIRMED AND CORRELATED ON THE JOB SITE AND BETWEEN INDIVIDUAL DRAWINGS OR SETS OF DRAWINGS; FOR FABRICATION PROCESSES AND CONSTRUCTION TECHNIQUES (INCLUDING EXCAVATION, SHORING AND SCAFFOLDING, BRACING, ERECTION, FORMWORK, ETC.); FOR COORDINATION OF THE VARIOUS TRADES; FOR SAFE CONDITIONS ON THE JOB SITE; AND FOR THE PROTECTION OF THE PEOPLE AND PROPERTY AT THE JOB SITE.
3. VARIATIONS IN FIELD CONDITIONS RELATIVE TO THE CONTRACT DOCUMENTS SHALL BE REPORTED TO THE ARCHITECT/ENGINEER WORK SHALL NOT PROGRESS UNTIL WRITTEN PERMISSION FROM THE ARCHITECT/ENGINEER IS OBTAINED.
4. THE INFORMATION CONTAINED ON THE DRAWINGS IS IN ITSELF INCOMPLETE, AND VOID UNLESS USED IN CONJUNCTION WITH ALL THE SPECIFICATIONS, TRADE PRACTICES, OR APPLICABLE STANDARDS, CODES, ETC., INCORPORATED THEREIN BY REFERENCE, OF WHICH THE CONTRACTOR CERTIFIES KNOWLEDGE BY SIGNING THE CONTRACT.
5. ARCHITECT/ENGINEER'S REVIEW OF DRAWINGS PREPARED BY THE CONTRACTORS, SUPPLIERS, ETC. ARE ONLY FOR CONFORMANCE WITH THE DESIGN CONCEPT. CONSTRUCTION SHALL NOT START WITHOUT SAID REVIEW, AND ONLY SHOP DRAWINGS STAMPED BY THE ARCHITECT/ENGINEER WILL BE ALLOWED AT THE JOB SITE.
6. DRAWINGS ARE NOT TO BE USED FOR SHOP DETAILING OR FOR CONSTRUCTION UNLESS SPECIFICALLY STAMPED BY THE ARCHITECT/ENGINEER ON THE DRAWINGS "FOR CONSTRUCTION". THESE DRAWINGS ARE TO BE REPRODUCED FOR THE PURPOSE OF USING THEM AS SHOP DRAWINGS.
7. UNLESS NOTED OTHERWISE, ALL DETAILS, SECTIONS, AND NOTES ON THE DRAWINGS ARE INTENDED TO BE TYPICAL FOR SIMILAR SITUATIONS ELSEWHERE.
8. ALL DIMENSIONS ON SUB-CONTRACTORS DRAWINGS ARE TO BE CHECKED BY THE CONTRACTOR AGAINST ARCHITECTURAL, MECHANICAL, AND ELECTRICAL DRAWINGS. CONTRACTOR SHALL BE FULLY RESPONSIBLE FOR CONFIRMING AND CORRELATING ALL DIMENSIONS ON THE JOB SITE AND BETWEEN INDIVIDUAL DRAWINGS AND TRADES.
9. SEE ARCHITECTURAL, MECHANICAL AND ELECTRICAL DRAWINGS FOR ADDITIONAL OPENINGS, SLEEVES, EQUIPMENT PADS, DEPRESSIONS, CURBS, FLOOR FINISHES, INSERTS, AND OTHER EMBEDDED ITEMS.
10. UNLESS OTHERWISE SHOWN OR NOTED, THE GENERAL CONTRACTOR SHALL BE RESPONSIBLE FOR COORDINATING THE LOCATION AND THE PLACEMENT OF ANY INSERTS, HANGARS, PIPE SLEEVES, HOLES OR ANCHORS BOLTS THAT ARE REQUIRED BY THE MECHANICAL OR ELECTRICAL EQUIPMENT.
11. THE CONTRACTOR SHALL COMPLY WITH THE LATEST OCCUPATIONAL SAFETY HEALTH ACT REQUIREMENTS.
12. ALL CONSTRUCTION SHALL BE PERFORMED IN STRICT CONFORMANCE WITH ALL APPLICABLE STATE AND LOCAL BUILDING CODES.

WISCONSIN
RALPH R. KELM
E-35913
MESA, AZ
PROFESSIONAL ENGINEER

08.13.2025

DRAWING INDEX :

REVISION DATE		
REV #3 08-06-2025	T1.0	TITLE SHEET
REV #3 08-06-2025	T1.1	LIFE SAFETY, PLAN SYMBOLS, & ACCESSIBLE MOUNTING DIAG.

CIVIL*:

C000	COVER SHEET
1 of 1	PLAT OF SURVEY
C100	EROSION CONTROL PLAN
C200	DEMOLITION PLAN
C300	OVERALL SITE & LANDSCAPE PLAN
C301	DETAILED SITE & LANDSCAPE PLAN
C400	GRADING PLAN
C500	SPECIFICATIONS

*CIVIL, DESIGN BY SEPARATE OWNER'S CONTRACT, WORK NOT COVERED BY THIS PROJECT'S SUPERVISING PROFESSIONAL

ARCHITECTURAL:

REV #3 08-06-2025	AD1.1	DEMO PLAN
REV #3 08-06-2025	A1.1	FIRST FLOOR PLAN
REV #2 06-27-2025	A2.1	EXTERIOR ELEVATIONS
REV #2 06-27-2025	A2.2	EXTERIOR ELEVATIONS
REV #2 06-27-2025	A3.0	WALL TYPES & WALL SECTIONS
REV #2 06-27-2025	A3.1	WALL SECTIONS
	A3.2	WALL SECTIONS
	A3.3	WALL SECTIONS
REV #2 06-27-2025	A3.4	WALL SECTIONS
REV #3 08-06-2025	A4.1	WALL & FLOOR FINISH PLAN
REV #2 06-27-2025	A4.2	INTERIOR FINISH SCHEDULE
	A4.3	INTERIOR FINISH SCHEDULE
REV #2 06-27-2025	A4.4	FURNITURE & FIXTURE PLAN
	A4.5	FURNITURE SCHEDULE
	A4.6	FIXTURE SCHEDULE
REV #3 08-06-2025	A6.1	REFLECTED CEILING PLAN
REV #2 06-27-2025	A6.2	LIGHT FIXTURE SCHEDULE
REV #3 08-06-2025	A7.1	DOOR SCHEDULE & DETAILS

STRUCTURAL:

REV #2 06-27-2025	S1.1	FOUNDATION PLAN
REV #3 08-06-2025	S2.1	ROOF FRAMING & PRECAST PLANK PLAN

BUILDING DATA :

OCCUPANCY: (chapter 3)	GROUP B, BUSINESS GROUP S-1, MODERATE - HAZZARD STORAGE
SPRINKLERS:	FULLY SPRINKLERD NFPA 13
CONSTRUCTION TYPE: (per 602)	TYPE III B TWO STORY 4 SIDES FIRE ACCESS

3

ALLOWABLE AREA: (per table 503)	GROUP B	3 STORIES	19,000 SQ. FT.
	GROUP S-1	2 STORIES	17,500 SQ. FT.
MOST RESTRICTIVE:	GROUP S-1	2 STORIES	17,500 SQ. FT.
OPEN AREA INCREASE:			13,125Q. FT.
		TOTAL =	30,625 SQ. FT.

ACTUAL AREA:	EXISTING FIRST FLOOR:	17,083 SQ. FT.
	FIRST FLOOR ADDITION 1:	1,803 SQ. FT.
	FIRST FLOOR ADDITION 2:	1,049 SQ. FT.
	TOTAL FIRST FLOOR AREA:	19,935 SQ. FT.
	EXISTING SECOND FLOOR:	3,381 SQ. FT.
	ALTERED FIRST FLOOR:	9,386 SQ. FT.

2

RATINGS REQUIRED: (per table 601)	OCCUPANCY SEPARATION	3 HOUR RATING
	STRUCTURAL FRAMING	NC-0 HOUR RATING
	BEARING WALL EXTERIOR	2 HOUR RATING
	BEARING WALL INTERIOR	NC-0 HOUR RATING
	NON BEARING EXTERIOR (_30')	NC-0 HOUR RATING
	NON BEARING INTERIOR	0 HOUR RATING
	FLOOR CONSTRUCTION	NC-0 HOUR RATING
	ROOF CONSTRUCTION	NC-0 HOUR RATING
	ROOF COVERING	CLASS - B

TDI ASSOCIATES, INC.
ARCHITECTURE & PLANNING

25217 SOUTH WIND LAKE ROAD
WIND LAKE, WISCONSIN 53185
PHONE 262-409-2530

PROFESSIONAL CONSULTANTS, INC.
300 COTTONWOOD AVE # 7
HARTLAND, WISCONSIN 53029
(262) 367-6080

RUSS DARROW
KIA OF WAUKESHA
2141 EAST MORELAND BLVD
WAUKESHA, WISCONSIN

TDI ASSOCIATES, INC
All Rights Reserved
OWNERSHIP OF DOCUMENTS
This document, and the ideas and design incorporated herein, as an instrument of professional service, is the sole property of TDI Associates, Inc., and is not to be used in whole or in part for any other project or purpose without the expressed written authorization of TDI Associates, Inc.

Sheet Title
TITLE SHEET

Issued For:	Date:
REV #1	09-03-2024
REV #2	06-27-2025
REV #3	08-06-2025

Date:	07-25-2024
Job NO.:	24103.000
Drawn By:	LCC

Sheet No.
T1.0

ABBREVIATIONS

ACT	Acoustic Tile
ADDN	Addition
ADJ	Adjustable
AFF	Above Finish Floor
ALT	Alternate
ALUM	Aluminum
AP	Access Panel
ARCH	Architectural/Architect
AVE	Avenue
BSBD	Baseboard
BB	Bulletin Board
BIT	Bituminous
BL	Borrowed Light
BLDG	Building
BLK	Block
BLKG	Blocking
BLKT	Blanket
BM	Beam
B.M.	Bench Mark
BO	By Owner
BOT	Bottom
BRG	Bearing
BRK	Brick
BSMT	Basement
BTWN	Between
BU	Built-Up
C	Channel
CAB	Cabinet
CPT	Carpet
CB	Chalkboard
C.B.	Catch Basin
CER	Ceramic
CG	Corner Guard
CI	Cast Iron
CJ	Control/Construction Joint
CL	Centerline
CLG	Ceiling
CMU	Concrete Masonry Unit
COL	Column
CONC	Concrete
CONF	Conference
CONST	Construction
CONT	Continuous
CONTR	Contractor
CORR	Corridor/Corrugated
CT	Ceramic Tile
CTR	Center/Counter
CU	Cubic
CFOI	Contractor Furnished, Owner Installed
D	Depth
DBL	Double
DEPT	Department
DTL	Detail
DF	Drinking Fountain
DH	Double Hung
DIA	Diameter
DIAG	Diagram/Diagonal
DIM	Dimension
DIV	Division
DMPPG	Dampproofing
DN	Down
DS	Down Spout
DWG	Drawing
DWL	Dowel
EA	Each
EF	Each Face
EL	Elevation
ELEC	Electrical
ELEV	Elevator
ENCL	Enclosure
EQ	Equal
EQUIP	Equipment
ETR	Existing To Remain
EW	Each Way
EWC	Electric Water Cooler
EXC	Excavate
EXH	Exhaust
EXIST	Existing
EXP	Expansion
EXT	Exterior
FA	Fire Alarm
FC	Fire Code
FD	Floor Drain/Fire Door
FDN	Foundation
FE	Fire Extinguisher
FEC	Fire Extinguisher Cabinet
FHC	Fire Hose Cabinet
FIN	Finish
FIX	Fixture
FLR	Floor
FLRG	Flooring
FLUOR	Fluorescent
FT	Feet
FTG	Footing
FUT	Future
F.F.	Finished Floor
FOF	Face Of Foundation
FOW	Face Of Wall
GA	Gauge
GALV	Galvanized
GB	Grab Bar
GC	General Contractor
GEN	General
GI	Galvanized Iron
GL	Glass
GWB	Gypsum Wall Board
GYM	Gymnasium
GYP	Gypsum
HD	Head
HDW	Hardware
HDWD	Hardwood
HGT	Height
HM	Hollow Metal
HORZ	Horizontal
HR	Hour
HV	Heating & Ventilating
HVAC	Heating, Ventilating, & Air Conditioning
ID	Inside Diameter
IE	Invert Elevation
IF	Inside Face
IN	Inches
INCL	Include
INSUL	Insulation
INT	Interior
INV	Invert
JAN	Janitor
JST	Joist
JT	Joint
KD	Knocked Down
KIP	One Thousand Pounds
KO	Knock Out
LAB	Laboratory
LAM	Laminated
LAV	Lavatory
LB	Pound
LBS	Pounds
LKR	Locker
LOUV	Louvers
LP	Low Point
LSJ	Long Span Joist
LT	Light
MAS	Masonry
MATL	Material
MAX	Maximum
MECH	Mechanical
MEMB	Membrane
MEZZ	Mezzanine
MDL	Model
MFGR	Manufacturer
MH	Manhole
MID	Middle
MIN	Minimum
MIRR	Mirror
MISC	Miscellaneous
MLDG	Moulding
MO	Masonry Opening
MTG	Mounting
MTL	Metal
NIC	Not In Contract
NO	Number
NOM	Nominal
NTS	Not To Scale
OC	On Center
OD	Outside Diameter
OFCI	Owner Furnished, Contractor Installed
OFOI	Owner Furnished, Owner Installed
O.S.	Overflow Scupper
OPNG	Opening
OPP	Opposite
OZ	Ounce
PART	Partition
%	Percent
PL	Plate/Property Line
PNLG	Paneling
PR	Pair
PREFAB	Prefabricated
PREFIN	Prefinished
PRELIM	Preliminary
PRESS	Pressure
PSF	Pounds Per Square Foot
PT	Point
PLYWD	Plywood
PROP	Property
PAS	Pole & Shelf
PLAS	Plaster
PLBG	Plumbing
PNL	Panel
QT	Quarry Tile
R	Riser/Radius
RB	Rubber Base
RD	Roof Drain
REC	Recessed
REF	Refrigerator
REINF	Reinforcing
REQD	Required
RES	Resilient
RET	Return
REV	Revised
RFG	Roofing
RI	Rough In
RM	Room
RO	Rough Opening
RT	Rubber Tile
SCH	Schedule
SECT	Section
SEW	Sewer
SGL	Single
SHT	Sheet
SIM	Similar
STL-JST	Steel Joist
SOG	Slab On Grade
SPEC	Specifications
SQ	Square
S/S	Stainless Steel
STD	Standard
STL	Steel
STM	Storm
STG	Storage
STRUCT	Structural/Structure
SUSP	Suspended
SW	Switch
SYM	Symetrical
TB	Tackboard/Towel Bar
T&B	Top & Bottom
TEL	Telephone
TEMP	Temperature
TER	Terrazzo
THRESH	Threshold
T&G	Tongue & Groove
TOB	Top Of Beam
TOD	Top Of Deck
TOF	Top Of Footing
TOJ	Top Of Joist
TOS	Top Of Slab/Steel
TOW	Top Of Wall
TPG	Topping
TRANS	Transformer
TYP	Typical
UL	Underwriters' Laboratories
UNEX	Unexcavated
UNFIN	Unfinished
UR	Urinal
VB	Vinyl Base
VCT	Vinyl Composite Tile
VERT	Vertical
VOL	Volume
VWF	Vinyl Wall Fabric
W	Width
W/	With
WC	Water Closet
WD	Wood
WF	Wide Flange
WWF	Welded Wire Fabric
W/O	Without

PLAN SYMBOLS :

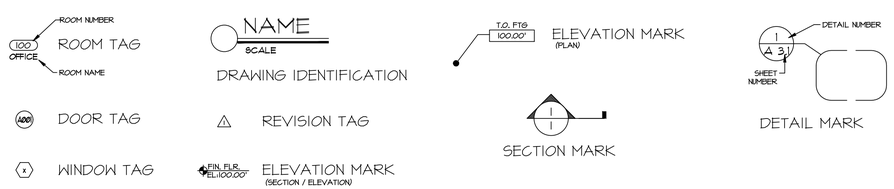

DRAWING LEGEND

- = SINGLE DIRECTION EXIT SIGN (EXIT SIGN FACES INDICATED WITH A LINE)
- = BUILDING EXIT
- = FIRE EXTINGUISHER CABINET
- = PATH OF EGRESS
- "S-1" OCCUPANCY
- "B" OCCUPANCY

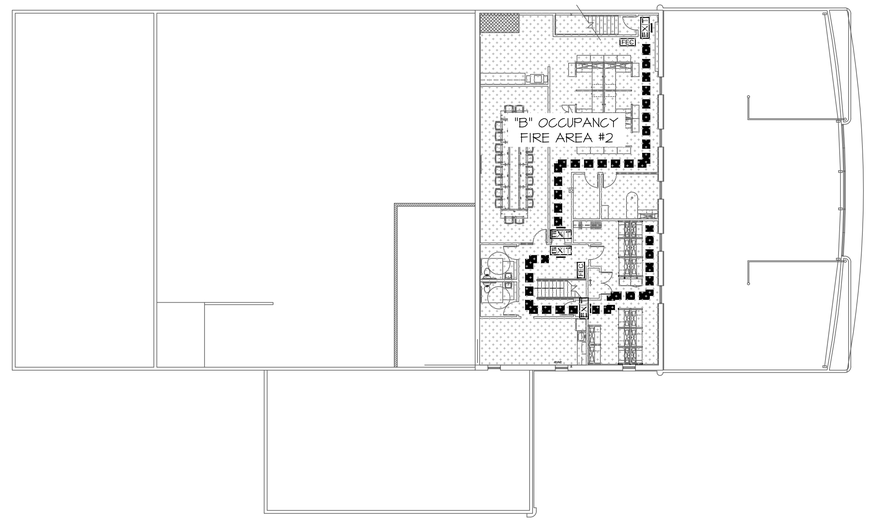

1 SECOND FLOOR LIFE SAFETY PLAN
1/16" = 1'-0"

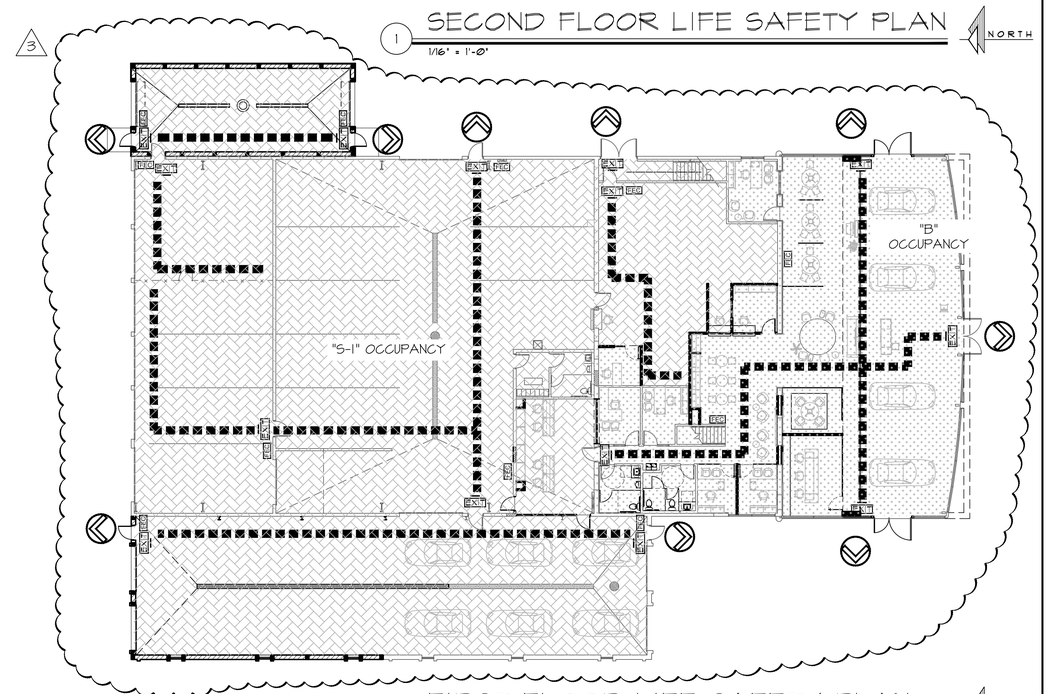

2 FIRST FLOOR LIFE SAFETY PLAN
1/16" = 1'-0"

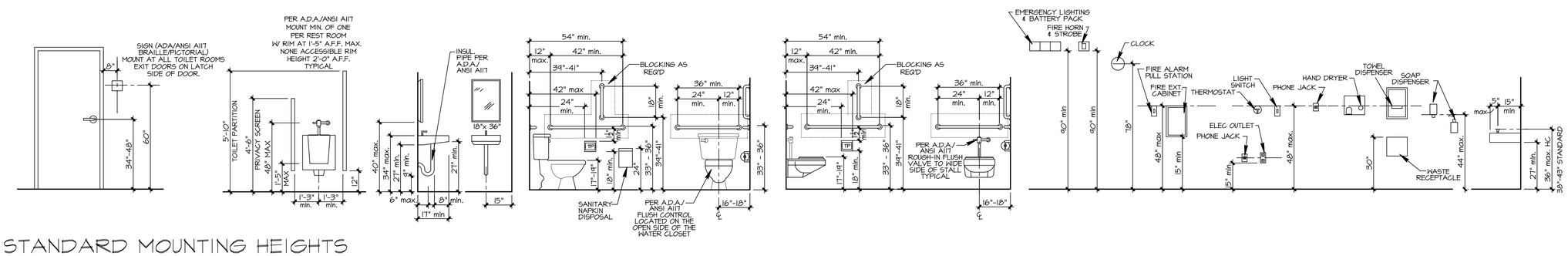

3 STANDARD MOUNTING HEIGHTS
3/8" = 1'-0"

YR-2009

TDI ASSOCIATES, INC.
ARCHITECTURE & PLANNING

25217 SOUTH WIND LAKE ROAD
WIND LAKE, WISCONSIN 53185
PHONE 262-409-2530

PROFESSIONAL CONSULTANTS, INC.
300 COTTONWOOD AVE # 7
HARTLAND, WISCONSIN 53029
(262) 367-6080

RUSS DARROW KIA OF WAUKESHA

2141 EAST MORELAND BLVD
WAUKESHA, WISCONSIN

TDI ASSOCIATES, INC
All Rights Reserved

OWNERSHIP OF DOCUMENTS

This document, and the ideas and design incorporated herein, as an instrument of professional service, is the sole property of TDI Associates, Inc., and is not to be used in whole or in part for any other project or purpose without the expressed written authorization of TDI Associates, Inc.

Sheet Title
LIFE SAFETY PLAN SYMBOLS, & ACCESSIBLE MOUNTING DIAG.

Issued For:	Date:
REV #2	06-27-2025
REV #3	08-06-2025

Date:	07-25-2024
Job NO.:	24103.000
Drawn By:	RJH

Sheet No.
T1.1

CONSTRUCTION PLANS
FOR
RUSS DARROW KIA WAUKESHA
CITY OF WAUKESHA, WISCONSIN

LEGEND
(PROPOSED FEATURES)

- TREE REMOVAL
- EXISTING CONCRETE PAVEMENT TO BE REMOVED
- EXISTING ASPHALT PAVEMENT TO BE REMOVED
- EXISTING GRAVEL TO BE REMOVED
- EXISTING BUILDING/STRUCTURE TO BE REMOVED
- SAWCUT LINE
- PROPOSED PROPERTY LINE
- PROPOSED SITE LIGHTING (DESIGNED BY OTHERS, FOR REFERENCE ONLY)
- MONUMENT SIGNS (CONSTRUCTION DETAILS BY OTHERS)
- SIGN
- HEAVY-DUTY CONCRETE PAVEMENT
- CONCRETE SIDEWALK
- HEAVY-DUTY ASPHALT PAVEMENT
- STANDARD-DUTY ASPHALT PAVEMENT
- COLORED AND STAMPED CONCRETE
- PROPOSED 18" REJECT CURB & GUTTER (AS SHOWN ON SITE PLAN)
- PROPOSED 18" STANDARD CURB & GUTTER (AS SHOWN ON SITE PLAN)
- VAN — PROPOSED ACCESSIBLE PAVEMENT MARKING
- VAN ACCSSSIBLE STALL
- PROPOSED TYPE 3 CURB RAMP (SEE DETAIL SHEET. NOTE LINEWORK ON PLAN IS SYMBOLIC ONLY.)
- PROPOSED TYPE 3A CURB RAMP (SEE DETAIL SHEET. NOTE LINEWORK ON PLAN IS SYMBOLIC ONLY.)
- PROPOSED TYPE 4 CURB RAMP (SEE DETAIL SHEET. NOTE LINEWORK ON PLAN IS SYMBOLIC ONLY.)
- PROPOSED TYPE 4A CURB RAMP (SEE DETAIL SHEET. NOTE LINEWORK ON PLAN IS SYMBOLIC ONLY.)
- PROPOSED TYPE 7 CURB RAMP (SEE DETAIL SHEET. NOTE LINEWORK ON PLAN IS SYMBOLIC ONLY.)
- DOOR
- STRUCTURAL RETAINING WALL – (DESIGNED BY OTHERS)
- 869.5 — PROPOSED 0.5-FOOT GRADE CONTOUR (ONLY USED WHEN CRITICAL)
- 869 — PROPOSED 1-FOOT GRADE CONTOUR
- 870 — PROPOSED 5-FOOT GRADE CONTOUR
- 877.70 × — PROPOSED SPOT GRADE
- (877.70) × — PROPOSED TOP OF CURB
- 877.70 TW — PROPOSED FINISHED SURFACE GRADE ADJACENT TO TOP OF WALL
- 877.00 BW — PROPOSED FINISHED SURFACE GRADE ADJACENT TO BASE OF WALL
- PROPOSED EROSION CONTROL BALE TEMPORARY DITCH CHECK
- PROPOSED INLET PROTECTION
- PROPOSED SILT FENCE
- PROPOSED TEMPORARY DIVERSION SWALE & BERM
- PROPOSED LEVEL SPREADER
- PROPOSED STONE TRACKING MAT
- PROPOSED PERMANENT TURF REINFORCEMENT MAT
- EROSION CONTROL BLANKET
- PROPOSED RIPRAP
- G — PROPOSED GAS LINE
- E — PROPOSED ELECTRIC LINE
- T — PROPOSED TELEPHONE LINE
- W — PROPOSED WATER MAIN
- STO — PROPOSED STORM SEWER
- S — PROPOSED SANITARY SEWER
- PROPOSED FIRE DEPARTMENT CONNECTION
- PROPOSED WATER VALVE
- PROPOSED FIRE HYDRANT
- PROPOSED INLET/ CB
- PROPOSED STORM MANHOLE
- PROPOSED AREA DRAIN
- PROPOSED SANITARY MANHOLE

LEGEND

- ( ) INDICATES RECORDED DIMENSION WHERE DIFFERENT FROM ACTUAL MEASUREMENT
- OR SECTION OR 1/4 SECTION CORNER AS DESCRIBED
- 1" DIA. IRON PIPE FOUND (UNLESS OTHERWISE NOTED)
- 1" DIA. IRON PIPE, 18" LONG-SET (UNLESS OTHERWISE NOTED)
- BOLLARD
- SOIL BORING/MONITORING WELL
- FLAGPOLE
- MAILBOX
- SIGN
- BILLBOARD
- AIR CONDITIONER
- CONTROL BOX
- TRAFFIC SIGNAL
- RAILROAD CROSSING SIGNAL
- CABLE PEDESTAL
- POWER POLE
- GUY POLE
- GUY WIRE
- LIGHT POLE
- SPOT/YARD/PEDESTAL LIGHT
- HANDICAPPED PARKING
- ELECTRIC MANHOLE
- ELECTRIC PEDESTAL
- ELECTRIC METER
- ELECTRIC TRANSFORMER
- TELEPHONE MANHOLE
- TELEPHONE PEDESTAL
- MARKED FIBER OPTIC
- GAS VALVE
- GAS METER
- GAS WARNING SIGN
- STORM MANHOLE
- ROUND INLET
- SQUARE INLET
- STORM SEWER END SECTION
- SANITARY MANHOLE
- SANITARY CLEANOUT OR SEPTIC VENT
- SANITARY INTERCEPTOR MANHOLE
- MISCELLANEOUS MANHOLE
- WATER VALVE
- HYDRANT
- WATER SERVICE CURB STOP
- WATER MANHOLE
- WELL
- WATER SURFACE
- WETLANDS FLAG
- MARSH
- CONIFEROUS TREE
- DECIDUOUS TREE
- SHRUB
- EDGE OF TREES
- S — SANITARY SEWER
- STO — STORM SEWER
- W — WATERMAIN
- G — MARKED GAS MAIN
- E — MARKED ELECTRIC
- OHW — OVERHEAD WIRES
- B — BUREAU ELEC. SERV.
- T — MARKED TELEPHONE
- TV — MARKED CABLE TV LINE
- FO — MARKED FIBER OPTIC
- 780 — INDICATES EXISTING CONTOUR ELEVATION
- × 780.55 — INDICATES EXISTING SPOT ELEVATION
- EXISTING PROPERTY LINE
- EXISTING EASEMENT LINE

VICINITY MAP

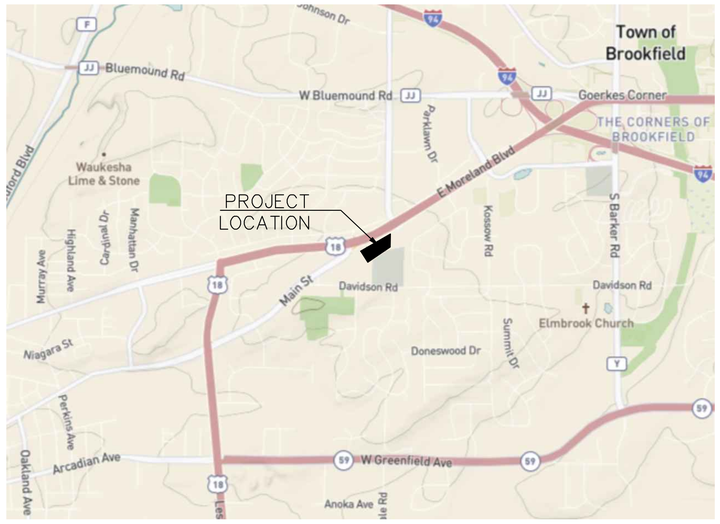

PLAN INDEX

SHEET NO.	DESCRIPTION
C000	COVER SHEET
1 OF 1	PLAT OF SURVEY
C100	EROSION CONTROL PLAN
C200	DEMOLITION PLAN
C300	OVERALL SITE & LANDSCAPE PLAN
C301	DETAILED SITE & LANDSCAPE PLAN
C400	GRADING PLAN
C500	UTILITY PLAN
C600	SPECIFICATIONS

ADDRESS:

2141 E. MORELAND BLVD
WAUKESHA, WI 53186

CITY OF WAUKESHA NOTE

1. *ALL SITE IMPROVEMENTS AND CONSTRUCTION SHOWN ON PLANS SHALL CONFORM TO THE CITY OF WAUKESHA DEVELOPMENT HANDBOOK & INFRASTRUCTURE SPECIFICATIONS. WHERE THE PLANS DO NOT COMPLY, IT SHALL BE THE SOLE RESPONSIBILITY AND EXPENSE OF THE DEVELOPER TO MAKE REVISIONS TO THE PLANS AND/OR CONSTRUCTED INFRASTRUCTURE TO COMPLY.*
2. *VERTICAL DATUM: NAVD 88, STARTING BENCHMARK: NORTHWEST CORNER OF NORTHWEST 1/4 OF SECTION 31, TOWNSHIP 7 NORTH, RANGE 20 EAST, FOUND CONCRETE MONUMENT WITH BRASS CAP, ELEVATION (CITY) 120.75+780.45= 901.20' NAVD 88*
3. *HORIZONTAL DATUM: NAD83*

ENGINEER AND LANDSCAPE ARCHITECT:

raSmith
CREATIVITY BEYOND ENGINEERING
16745 W. Bluemound Road
Brookfield, WI 53005-5938
(262) 781-1000
rasmith.com

RYAN J. LANCOUR, P.E. PROJECT MANAGER
PH: (262) 317-3259

PROPERTY OWNER:

REALTY INCOME PROPERTIES 24, LLC
C/O RUSS DARROW AUTO GROUP
W133N8569 EXECUTIVE PKWY
MENOMONEE FALLS, WI 53051

DEVELOPER:

CHAD KEMNITZ, PRESIDENT
PROFESSIONAL CONSULTANTS, INC.
133 HILL ST.
HARTLAND, WI 53029
PH: (262) 367-6080

BENCHMARK 1:

SW BOLT ON HYDRANT.
HYDRANT IS NW OF SITE.
ELEVATION = 953.41'
VERTICAL DATUM: NAVD 88

BENCHMARK 2:

TOP OF CONC BASE LP. LP IS NE OF SITE
ELEVATION = 959.99'
VERTICAL DATUM: NAVD 88

SEWRPC BENCHMARK 1:

CONC. MON. W/ BRASS CAP
SW CORNER OF NW ¼ SEC.
31-7-20
ELEVATION = 954.57'
N: 378,688.03 USFT
E: 2,453,501.89 USFT

SEWRPC BENCHMARK 2:

CONC. MON. W/ CAP
NW CORNER OF NW ¼ SEC.
31-7-20
ELEVATION = 901.20'
N: 381,331.06 USFT
E: 2,453,478.14 USFT

811 Know what's below. Call before you dig.

R.A.SMITH, INC. ASSUMES NO RESPONSIBILITY FOR DAMAGES, LIABILITY OR COSTS RESULTING FROM CHANGES OR ALTERATIONS MADE TO THIS PLAN WITHOUT THE EXPRESSED WRITTEN CONSENT OF R.A.SMITH, INC.

ALL COPYRIGHTS TO THESE DRAWINGS ARE RESERVED. THEY MAY NOT BE COPIED, CHANGED, OR ASSIGNED TO ANY THIRD PARTY IN ANY MANNER WITHOUT OBTAINING THE EXPRESSED WRITTEN PERMISSION OF R.A.SMITH, INC.

PLAN DATE: 1/21/2025

REVISIONS	ISSUE DATE	SHEET NO.'S	ISSUED FOR:

raSmith
CREATIVITY BEYOND ENGINEERING
16745 W. Bluemound Road
Brookfield, WI 53005-5938
(262) 781-1000
rasmith.com
Brookfield, WI | Milwaukee, WI | Appleton, WI | Madison, WI
Cedarburg, WI | Naperville, IL | Irvine, CA

RUSS DARROW KIA WAUKESHA
WAUKESHA, WISCONSIN

COVER SHEET

WISCONSIN JEREMY J. JEFFERY E-41449 BROOKFIELD WI PROFESSIONAL ENGINEER

1/21/2025

© COPYRIGHT 2025
R.A. Smith, Inc.

DATE: 1/21/2025
SCALE: NTS
JOB NO. 3200102.01
PROJECT MANAGER: RYAN J. LANCOUR, P.E.
DESIGNED BY: CRR
CHECKED BY: RJL

SHEET NUMBER
C000

P:\3200102\3200102.01\Dwg\Sheets\3200102.01 TS01.dwg, Cover Sheet 36x24, 1/21/2025 3:22:38 PM, crr

PLAT OF SURVEY
W/ TOPOGRAPHIC DATA

KNOWN AS: 2141 E. MORELAND BOULEVARD, WAUKESHA, WISCONSIN

LOT 1 OF CERTIFIED SURVEY MAP NO. 12184, RECORDED IN WAUKESHA COUNTY REGISTER OF DEEDS OFFICE ON May 28, 2021, IN BOOK 124, PAGES 327-330, AS DOCUMENT NO. 4588107, BEING PART OF THE SOUTHEAST 1/4 OF THE NORTHEAST 1/4 OF SECTION 36, TOWNSHIP 7 NORTH, RANGE 19 EAST, IN THE CITY OF WAUKESHA, WAUKESHA COUNTY, WISCONSIN.

PREPARED FOR: PROFESSIONAL CONSULTANTS, INC.
SURVEY NO: 169065-KAC

NOTES:
-VERTICAL DATUM: NAVD 88, STARTING BENCHMARK: NORTHWEST CORNER OF NORTHWEST 1/4 OF SECTION 31, TOWNSHIP 7 NORTH, RANGE 20 EAST, FOUND CONCRETE MONUMENT WITH BRASS CAP, ELEVATION (CITY) 120.75+780.45= 901.20' NAVD 88

-HORIZONTAL DATUM: NAD83

I CERTIFY, that this survey was prepared under my supervision and is correct to the best of my professional knowledge and belief and complies with Chapter A-E 7 of the Wisconsin Administrative Code.

Date: June 18, 2024
Date of Revision: January 15, 2025

WISCONSIN ERIC R. STURM S-2309 EAGLE WI LAND SURVEYOR

ERIC R. STURM
WISCONSIN PROFESSIONAL LAND SURVEYOR S-2309

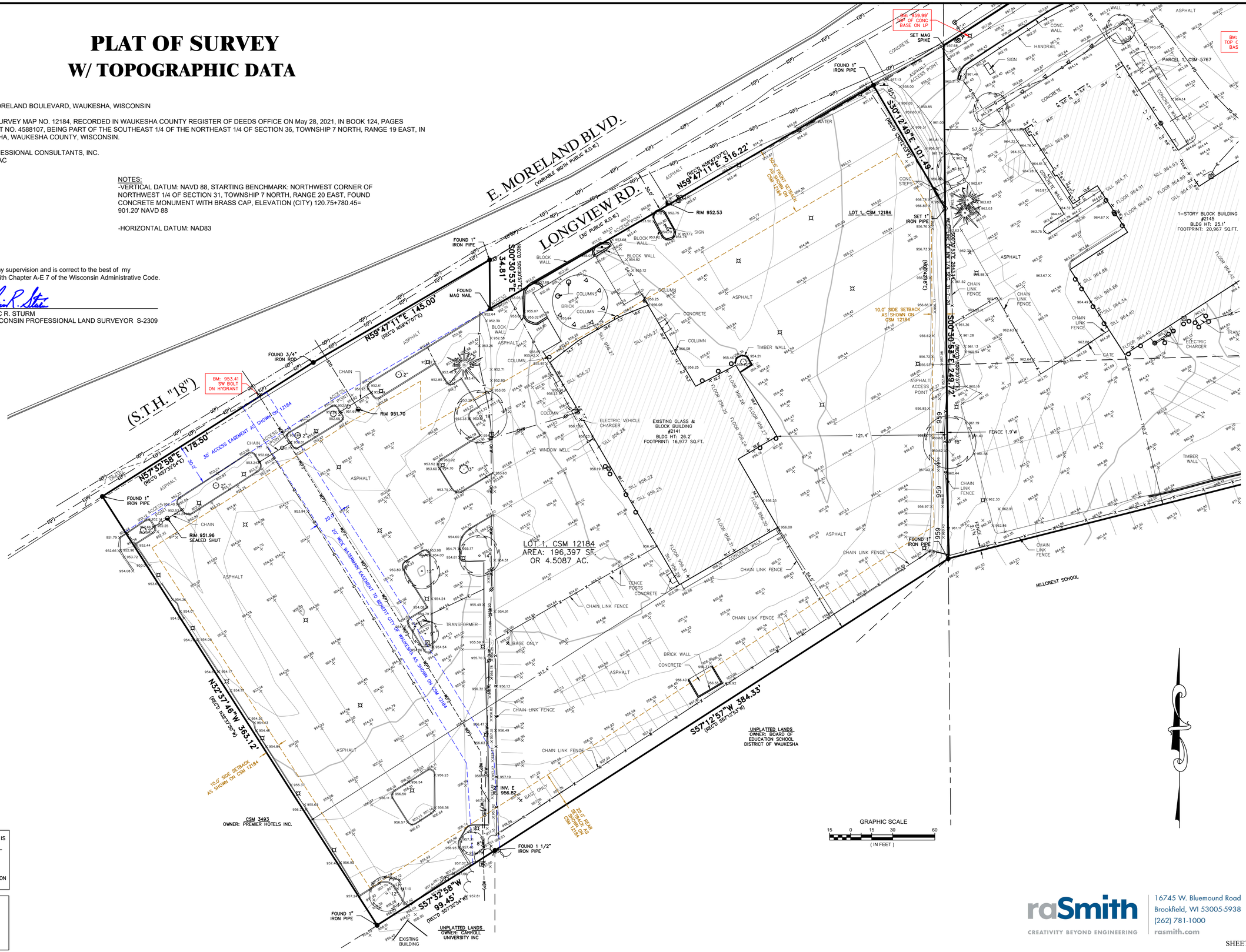

LEGEND

- BOLLARD
- SOIL BORING/MONITORING WELL
- FLAGPOLE
- MAILBOX
- SIGN
- AIR CONDITIONER
- CONTROL BOX
- TRAFFIC SIGNAL
- CABLE PEDESTAL
- POWER POLE
- GUY POLE
- GUY WIRE
- LIGHT POLE
- SPOT/YARD/PEDESTAL LIGHT
- HANDICAPPED PARKING
- PULL BOX
- ELECTRIC MANHOLE
- ELECTRIC PEDESTAL
- ELECTRIC METER
- ELECTRIC TRANSFORMER
- TELEPHONE MANHOLE
- TELEPHONE PEDESTAL
- UTILITY VAULT
- GAS VALVE
- GAS METER
- GAS WARNING SIGN
- STORM MANHOLE
- ROUND INLET
- SQUARE INLET
- STORM SEWER END SECTION
- SANITARY MANHOLE
- SANITARY CLEANOUT OR SEPTIC VENT
- SANITARY INTERCEPTOR MANHOLE
- MISCELLANEOUS MANHOLE
- IRRIGATION CONTROL BOX
- WATER VALVE
- HYDRANT
- WATER SERVICE CURB STOP
- WATER MANHOLE
- WELL
- WATER SURFACE
- WETLANDS FLAG
- MARSH
- CONIFEROUS TREE
- DECIDUOUS TREE
- SHRUB
- —EDGE OF TREES
- S —SANITARY SEWER
- STO—STORM SEWER
- W —WATERMAIN
- G —MARKED GAS MAIN
- E —MARKED ELECTRIC
- OHW—OVERHEAD WIRES
- B —BUREAU ELEC. SERV.
- T —MARKED TELEPHONE
- TV—MARKED CABLE TV LINE
- FO—MARKED FIBER OPTIC
- (P) —UTILITY PER PLAN
- 780 — INDICATES EXISTING CONTOUR ELEVATION
- × 780.55 — INDICATES EXISTING SPOT ELEVATION

DIGGERS HOTLINE TICEKT NOS: 20242025334 & 5345

THE UNDERGROUND UTILITY INFORMATION AS SHOWN HEREON IS BASED, IN PART, UPON INFORMATION FURNISHED BY UTILITY COMPANIES AND THE LOCAL MUNICIPALITY. WHILE THIS INFORMATION IS BELIEVED TO BE RELIABLE, ITS ACCURACY AND COMPLETENESS CANNOT BE GUARANTEED NOR CERTIFIED TO.

(P) INDICATES PIPE SIZES PER RECORD PLANS. OTHER PIPE SIZES ARE ESTIMATED. NO PIPE SIZES SHOULD BE RELIED UPON WITHOUT FURTHER VERIFICATION.

R.A.SMITH, INC. ASSUMES NO RESPONSIBILITY FOR DAMAGES, LIABILITY OR COSTS RESULTING FROM CHANGES OR ALTERATIONS MADE TO THIS PLAN WITHOUT THE EXPRESSED WRITTEN CONSENT OF R.A.SMITH, INC.

ALL COPYRIGHTS TO THESE DRAWINGS ARE RESERVED. THEY MAY NOT BE COPIED, CHANGED, OR ASSIGNED TO ANY THIRD PARTY IN ANY MANNER WITHOUT OBTAINING THE EXPRESSED WRITTEN PERMISSION OF R.A.SMITH, INC.

raSmith
CREATIVITY BEYOND ENGINEERING
16745 W. Bluemound Road
Brookfield, WI 53005-5938
(262) 781-1000
rasmith.com

S:\5169065\dwg\ PS22D- NAVD 88.dwg \ PCI

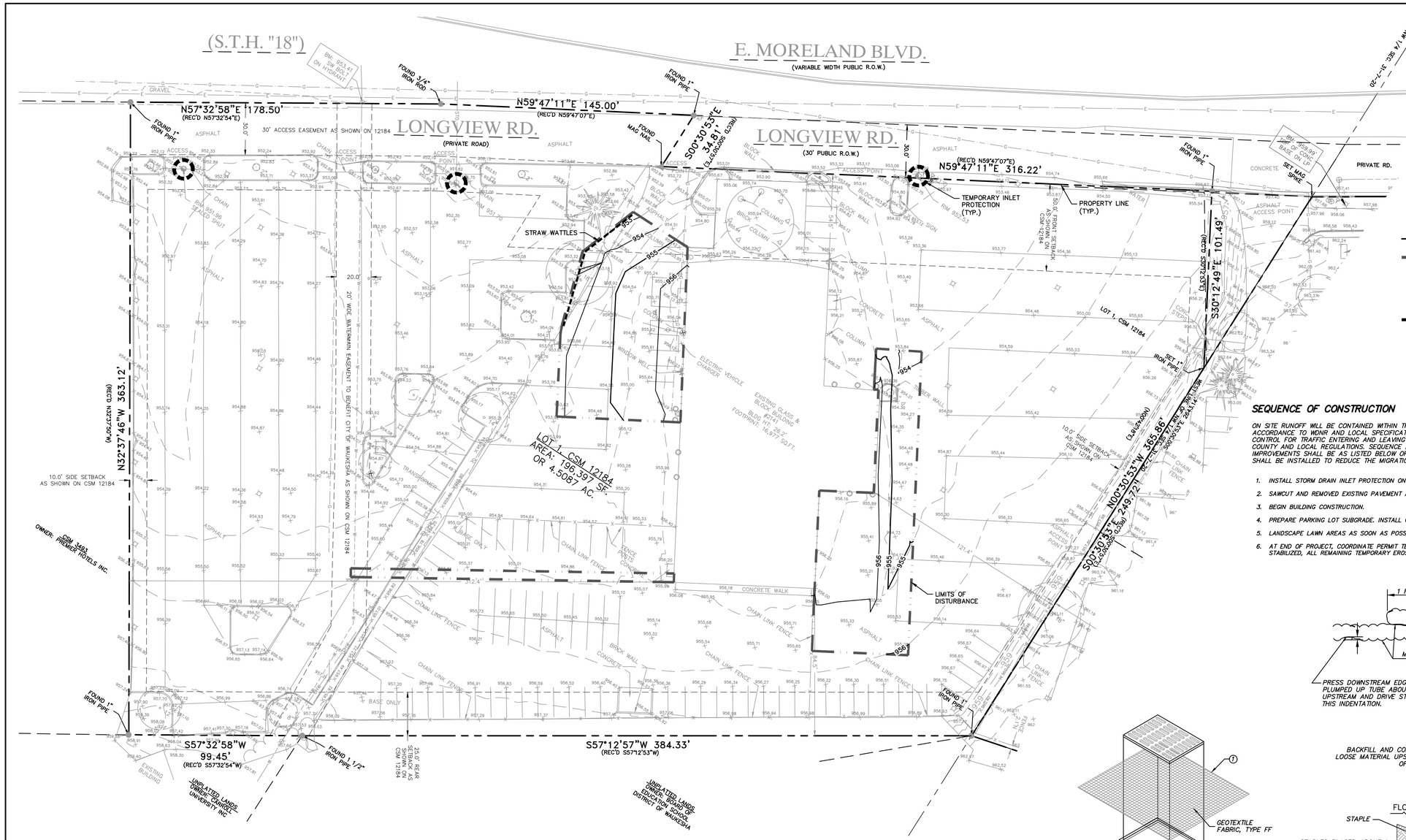

EROSION CONTROL LEGEND

- PROPOSED PROPERTY LINE
- LIMITS OF DISTURBANCE = 0.36 AC
  ONSITE = 0.36 AC
  OFFSITE = 0.00 AC
- TEMPORARY INLET PROTECTION
- STRAW WATTLES

START DATE: XX 2024
END DATE: XX 2025

RECEIVING WATERS: FOX RIVER

SEQUENCE OF CONSTRUCTION

ON SITE RUNOFF WILL BE CONTAINED WITHIN THE LIMITS OF THE PROJECT. ALL DEWATERING SHALL BE DONE IN ACCORDANCE TO WDNR AND LOCAL SPECIFICATIONS. CONTRACTOR SHALL BE RESPONSIBLE FOR TEMPORARY TRAFFIC CONTROL FOR TRAFFIC ENTERING AND LEAVING THE SITE. TRAFFIC CONTROL SHALL BE IN ACCORDANCE WITH STATE, COUNTY AND LOCAL REGULATIONS. SEQUENCE AND TIMING FOR INSTALLATION OF EROSION CONTROL MEASURES & SITE IMPROVEMENTS SHALL BE AS LISTED BELOW OR AS SITE CONDITIONS WARRANT DURING CONSTRUCTION ADDITIONAL BMPS SHALL BE INSTALLED TO REDUCE THE MIGRATION OF SEDIMENT TO THE MOST EXTENT PRACTICABLE.

1. INSTALL STORM DRAIN INLET PROTECTION ON EXISTING INDICATED STORM INLETS. INSTALL STRAW WATTLES..
2. SAWCUT AND REMOVED EXISTING PAVEMENT AS SHOWN ON SHEET C200.
3. BEGIN BUILDING CONSTRUCTION.
4. PREPARE PARKING LOT SUBGRADE. INSTALL CURB AND GUTTER AND PAVE SITE.
5. LANDSCAPE LAWN AREAS AS SOON AS POSSIBLE.
6. AT END OF PROJECT, COORDINATE PERMIT TERMINATION WITH CITY EROSION INSPECTOR. ONCE THE PROJECT SITE IS 80% STABILIZED, ALL REMAINING TEMPORARY EROSION CONTROL BMPS SHALL BE REMOVED AND RESTORED AS NECESSARY.

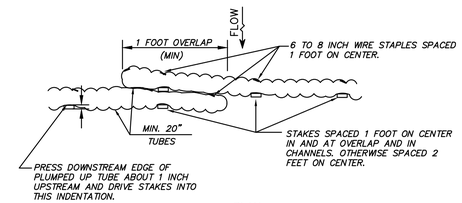

STRAW WATTLE
(NOT TO SCALE)

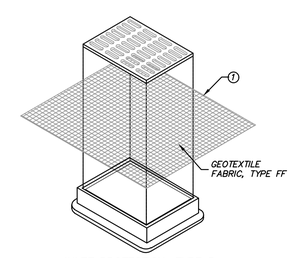

INLET PROTECTION, TYPE B
(WITHOUT CURB BOX)
(CAN BE INSTALLED IN ANY INLET WITHOUT A CURB BOX)

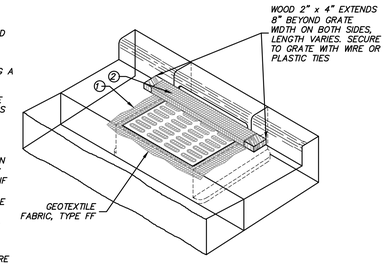

INLET PROTECTION, TYPE C
(WITH CURB BOX)

1. FINISHED SIZE, INCLUDING FLAP POCKETS WHERE REQUIRED, SHALL EXTEND A MINIMUM OF 10" AROUND THE PERIMETER TO FACILITATE MAINTENANCE OR REMOVAL.
2. FOR INLET PROTECTION, TYPE C (WITH CURB BOX), AN ADDITIONAL 18" OF FABRIC IS WRAPPED AROUND THE WOOD AND SECURED WITH STAPLES. THE WOOD SHALL NOT BLOCK THE ENTIRE HEIGHT OF THE CURB BOX OPENING.
3. FLAP POCKETS SHALL BE LARGE ENOUGH TO ACCEPT WOOD 2X4. THE REBAR, STEEL PIPE, OR WOOD SHALL BE INSTALLED IN THE REAR FLAP AND SHALL NOT BLOCK THE TOP HALF OF THE CURB FACE OPENING.
4. SIDE FLAPS SHALL BE A MAXIMUM OF 2" LONG. FOLD THE FABRIC OVER AND REINFORCE WITH MULTIPLE STITCHES.

GENERAL NOTES:

INLET PROTECTION DEVICES SHALL CONFORM TO WDNR CONSERVATION PRACTICE STANDARD 1060 AND BE MAINTAINED OR REPLACED AT THE DIRECTION OF THE ENGINEER.

MANUFACTURED ALTERNATIVES APPROVED AND LISTED ON THE WISDOT'S EROSION CONTROL PRODUCT ACCEPTABILITY LIST MAY BE SUBSTITUTED IF ALLOWED BY ENGINEER.

TYPE A IS TO BE USED PRIOR TO PAVING AND INSTALLATION OF CURB AND GUTTER, AND TYPES B, C, AND D ARE TO BE USED AFTER PAVING IS PLACED.

TYPE A SHALL BE USED AROUND INLETS AND UNPAVED AREAS UNTIL PERMANENT STABILIZATION METHODS HAVE BEEN ESTABLISHED.

TYPE B SHALL BE USED AFTER THE CASTING AND GRATE ARE IN PLACE, ON INLETS WITHOUT A CURB BOX WHEN TYPE D INLET DEVICES CANNOT BE USED.

TYPE C SHALL BE USED AFTER THE CASTING AND GRATE ARE IN PLACE, ON STREET INLETS WITH CURB HEADS.

TYPE D SHALL BE USED IN AREAS WHERE OTHER TYPES OF INLET PROTECTION ARE INCOMPATIBLE WITH ROADWAY AND TRAFFIC CONDITIONS (I.E. POSSIBLE SAFETY HAZARD IF PONDING OCCURS), OR WHERE MORE EFFECTIVE INLET FILTERING IS NEEDED.

TAPER BOTTOM OF BAG TO MAINTAIN 3" OF CLEARANCE BETWEEN THE BAG AND THE STRUCTURE, MEASURED FROM THE BOTTOM OF THE OVERFLOW OPENINGS TO THE STRUCTURE WALL.

GEOTEXTILE FABRIC TYPE FF FOR FLAPS, TOP AND BOTTOM OF OUTSIDE OF FILTER BAG. FRONT, BACK, AND BOTTOM OF FILTER BAG BEING ONE PIECE.

INSTALLATION NOTES:

TYPE B & C:
TRIM EXCESS FABRIC IN THE FLOW LINE TO WITHIN 3" OF THE GRATE.

THE CONTRACTOR SHALL DEMONSTRATE A METHOD OF MAINTENANCE, USING A SEWN FLAP, HAND HOLDS OR OTHER METHOD TO PREVENT ACCUMULATED SEDIMENT FROM ENTERING THE INLET.

TYPE D:
DO NOT INSTALL INLET PROTECTION TYPE D IN INLETS SHALLOWER THAN 30", MEASURED FROM THE BOTTOM OF THE INLET TO THE TOP OF THE GRATE.

TRIM EXCESS FABRIC IN THE FLOW LINE TO WITHIN 3" OF THE GRATE.

THE INSTALLED BAG SHALL HAVE A MINIMUM SIDE CLEARANCE, BETWEEN THE INLET WALLS AND THE BAG, MEASURED AT THE BOTTOM OF THE OVERFLOW HOLES, OF 3". WHERE NECESSARY THE CONTRACTOR SHALL CINCH THE BAG, USING PLASTIC ZIP TIES, TO ACHIEVE THE 3" CLEARANCE. THE TIES SHALL BE PLACED AT A MAXIMUM OF 4" FROM THE BOTTOM OF THE BAG.

STORM DRAIN INLET PROTECTION
(NOT TO SCALE)

MAINTENANCE:

REMOVE INLET PROTECTION DEVICES ONCE THE CONTRIBUTING DRAINAGE AREA IS STABILIZED WITH APPROPRIATE VEGETATION OR IMPERVIOUS SURFACE.

INLET PROTECTION SHALL BE, AT A MINIMUM, INSPECTED WEEKLY AND WITHIN 24 HOURS AFTER EVERY PRECIPITATION EVENT THAT PRODUCES 0.5 INCHES OF RAIN OR MORE DURING A 24-HOUR PERIOD.

FOR TYPE A, B OR C INLET PROTECTION, SEDIMENT DEPOSITS SHALL BE REMOVED AND THE INLET PROTECTION DEVICE RESTORED TO ITS ORIGINAL DIMENSIONS WHEN THE SEDIMENT HAS ACCUMULATED BETWEEN 1/3 TO 1/2 THE DESIGN DEPTH OF THE DEVICE, OR WHEN THE DEVICE IS NO LONGER FUNCTIONING AS DESIGNED.

FOR TYPE D INLET PROTECTION (INCLUDING D-M AND D-HR), REMOVE SEDIMENT WHEN SEDIMENT ACCUMULATES TO WITHIN 6" OF THE BOTTOM OF THE OVERFLOW HOLES, OR WHEN STANDING WATER REMAINS WITHIN 6" OF THE BOTTOM OF THE OVERFLOW HOLES 24 HOURS AFTER A RUNOFF EVENT. HOLES IN THE TYPE FF FABRIC MAY BE REPAIRED BY STITCHING IF LESS THAN 2" IN LENGTH, BUT THE FABRIC SHOULD BE REPLACED IF THE HOLES ARE GREATER THAN 2" IN LENGTH IN THE TYPE FF FABRIC OR IF THERE ARE ANY HOLES IN THE TYPE HR FABRIC. THE FILTER MUST ALSO BE REPLACED IF THE FLAP POCKETS SUSTAIN DAMAGE THAT COMPROMISES FILTER INTEGRITY OR THE ABILITY TO PERFORM MAINTENANCE.

REMOVED SEDIMENT SHALL BE DEPOSITED IN A SUITABLE AREA AND STABILIZED.

WHEN REMOVING OR MAINTAINING INLET PROTECTION, DUE CARE SHALL BE TAKEN TO ENSURE SEDIMENT DOES NOT FALL INTO THE INLET AND IMPEDE THE INTENDED FUNCTION OF THE DEVICE. ANY MATERIAL FALLING INTO THE INLET SHALL BE REMOVED IMMEDIATELY.

Know what's below.
Call before you dig.

R.A.SMITH, INC. ASSUMES NO RESPONSIBILITY FOR DAMAGES, LIABILITY OR COSTS RESULTING FROM CHANGES OR ALTERATIONS MADE TO THIS PLAN WITHOUT THE EXPRESSED WRITTEN CONSENT OF R.A.SMITH, INC.

ALL COPYRIGHTS TO THESE DRAWINGS ARE RESERVED. THEY MAY NOT BE COPIED, CHANGED, OR ASSIGNED TO ANY THIRD PARTY IN ANY MANNER WITHOUT OBTAINING THE EXPRESSED WRITTEN PERMISSION OF R.A.SMITH, INC.

DATE	DESCRIPTION

raSmith
CREATIVITY BEYOND ENGINEERING
16745 W. Bluemound Road
Brookfield, WI 53005-5938
(262) 781-1000
rasmith.com
Brookfield, WI | Milwaukee, WI | Appleton, WI | Madison, WI
Cedarburg, WI | Naperville, IL | Irvine, CA

RUSS DARROW KIA WAUKESHA
WAUKESHA, WISCONSIN

EROSION CONTROL PLAN

© COPYRIGHT 2025
R.A. Smith, Inc.

DATE: 1/21/2025
SCALE: 1" = 30'
JOB NO. 3200102.01
PROJECT MANAGER: RYAN J. LANCOUR, P.E.
DESIGNED BY: CRR
CHECKED BY: RJL

SHEET NUMBER
C100

F:\3200102\3200102.01\Dwg\Sheets\3200102.01 EC01.dwg, Erosion, 1/21/2025 3:22:51 PM, crr

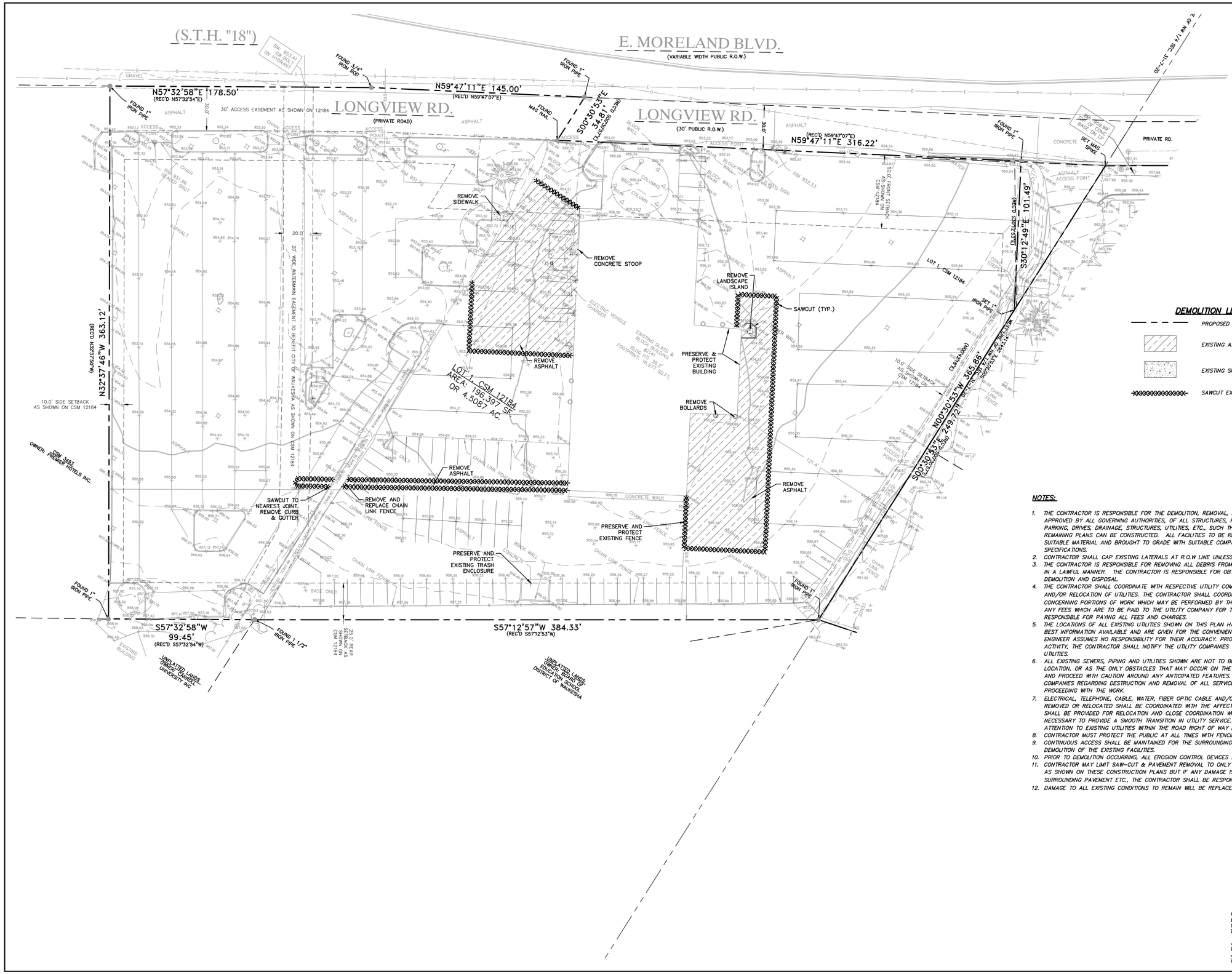

DEMOLITION LEGEND

- PROPOSED PROPERTY LINE
- EXISTING ASPHALT TO BE REMOVED
- EXISTING SIDEWALK TO BE REMOVED
- SAWCUT EXISTING PAVEMENT TO ASSURE CLEAN FIT

NOTES:

1. THE CONTRACTOR IS RESPONSIBLE FOR THE DEMOLITION, REMOVAL, AND DISPOSAL IN A LOCATION APPROVED BY ALL GOVERNING AUTHORITIES, OF ALL STRUCTURES, PADS, WALLS, FLUMES, FOUNDATIONS, PARKING, DRIVES, DRAINAGE, STRUCTURES, UTILITIES, ETC., SUCH THAT THE IMPROVEMENTS SHOWN ON THE REMAINING PLANS CAN BE CONSTRUCTED. ALL FACILITIES TO BE REMOVED SHALL BE UNDERCUT TO SUITABLE MATERIAL AND BROUGHT TO GRADE WITH SUITABLE COMPACTED FILL MATERIAL PER THE SPECIFICATIONS.
2. CONTRACTOR SHALL CAP EXISTING LATERALS AT R.O.W LINE UNLESS REQUIRED DIFFERENTLY BY AHS.
3. THE CONTRACTOR IS RESPONSIBLE FOR REMOVING ALL DEBRIS FROM THE SITE AND DISPOSING THE DEBRIS IN A LAWFUL MANNER. THE CONTRACTOR IS RESPONSIBLE FOR OBTAINING ALL PERMITS REQUIRED FOR DEMOLITION AND DISPOSAL.
4. THE CONTRACTOR SHALL COORDINATE WITH RESPECTIVE UTILITY COMPANIES PRIOR TO THE REMOVAL AND/OR RELOCATION OF UTILITIES. THE CONTRACTOR SHALL COORDINATE WITH THE UTILITY COMPANY CONCERNING PORTIONS OF WORK WHICH MAY BE PERFORMED BY THE UTILITY COMPANY'S FORCES AND ANY FEES WHICH ARE TO BE PAID TO THE UTILITY COMPANY FOR THEIR SERVICES. THE CONTRACTOR IS RESPONSIBLE FOR PAYING ALL FEES AND CHARGES.
5. THE LOCATIONS OF ALL EXISTING UTILITIES SHOWN ON THIS PLAN HAVE BEEN DETERMINED FROM THE BEST INFORMATION AVAILABLE AND ARE GIVEN FOR THE CONVENIENCE OF THE CONTRACTOR. THE ENGINEER ASSUMES NO RESPONSIBILITY FOR THEIR ACCURACY. PRIOR TO THE START OF ANY DEMOLITION ACTIVITY, THE CONTRACTOR SHALL NOTIFY THE UTILITY COMPANIES FOR ONSITE LOCATIONS OF EXISTING UTILITIES.
6. ALL EXISTING SEWERS, PIPING AND UTILITIES SHOWN ARE NOT TO BE INTERPRETED AS THE EXACT LOCATION, OR AS THE ONLY OBSTACLES THAT MAY OCCUR ON THE SITE. VERIFY EXISTING CONDITIONS AND PROCEED WITH CAUTION AROUND ANY ANTICIPATED FEATURES. GIVE NOTICE TO ALL UTILITY COMPANIES REGARDING DESTRUCTION AND REMOVAL OF ALL SERVICE LINES AND CAP ALL LINES BEFORE PROCEEDING WITH THE WORK.
7. ELECTRICAL, TELEPHONE, CABLE, WATER, FIBER OPTIC CABLE AND/OR GAS LINES NEEDING TO BE REMOVED OR RELOCATED SHALL BE COORDINATED WITH THE AFFECTED UTILITY COMPANY. ADEQUATE TIME SHALL BE PROVIDED FOR RELOCATION AND CLOSE COORDINATION WITH THE UTILITY COMPANY IS NECESSARY TO PROVIDE A SMOOTH TRANSITION IN UTILITY SERVICE. CONTRACTOR SHALL PAY CLOSE ATTENTION TO EXISTING UTILITIES WITHIN THE ROAD RIGHT OF WAY DURING CONSTRUCTION.
8. CONTRACTOR MUST PROTECT THE PUBLIC AT ALL TIMES WITH FENCING, BARRICADES, ENCLOSURES, ETC.
9. CONTINUOUS ACCESS SHALL BE MAINTAINED FOR THE SURROUNDING PROPERTIES AT ALL TIMES DURING DEMOLITION OF THE EXISTING FACILITIES.
10. PRIOR TO DEMOLITION OCCURRING, ALL EROSION CONTROL DEVICES ARE TO BE INSTALLED.
11. CONTRACTOR MAY LIMIT SAW-CUT & PAVEMENT REMOVAL TO ONLY THOSE AREAS WHERE IT IS REQUIRED AS SHOWN ON THESE CONSTRUCTION PLANS BUT IF ANY DAMAGE IS INCURRED ON ANY OF THE SURROUNDING PAVEMENT ETC., THE CONTRACTOR SHALL BE RESPONSIBLE FOR IT'S REMOVAL AND REPAIR.
12. DAMAGE TO ALL EXISTING CONDITIONS TO REMAIN WILL BE REPLACED AT CONTRACTOR'S EXPENSE.

Know what's **below.**
Call before you dig.

R.A.SMITH, INC. ASSUMES NO RESPONSIBILITY FOR DAMAGES, LIABILITY OR COSTS RESULTING FROM CHANGES OR ALTERATIONS MADE TO THIS PLAN WITHOUT THE EXPRESSED WRITTEN CONSENT OF R.A.SMITH, INC.

ALL COPYRIGHTS TO THESE DRAWINGS ARE RESERVED. THEY MAY NOT BE COPIED, CHANGED, OR ASSIGNED TO ANY THIRD PARTY IN ANY MANNER WITHOUT OBTAINING THE EXPRESSED WRITTEN PERMISSION OF R.A.SMITH, INC.

DATE	DESCRIPTION

raSmith
CREATIVITY BEYOND ENGINEERING
16745 W. Bluemound Road
Brookfield, WI 53005-5938
(262) 781-1000
rasmith.com
Brookfield, WI | Milwaukee, WI | Appleton, WI | Madison, WI
Cedarburg, WI | Naperville, IL | Irvine, CA

RUSS DARROW KIA WAUKESHA
WAUKESHA, WISCONSIN

DEMOLITION PLAN

© COPYRIGHT 2025
R.A. Smith, Inc.

DATE: 1/21/2025

SCALE: 1" = 30'

JOB NO. 3200102.01

PROJECT MANAGER: RYAN J. LANCOUR, P.E.

DESIGNED BY: CRR

CHECKED BY: RJL

SHEET NUMBER

C200

P:\3200102\3200102.01\Dwg\Sheets\3200102.01 DP01.dwg, Demo, 1/21/2025 3:23:03 PM, crr

LEGEND

- PROPERTY LINE
- PROPOSED 18" CURB & GUTTER
- SEAL COAT
- STANDARD-DUTY ASPHALT PAVEMENT
- CONCRETE SIDEWALKS
- BUILDING ADDITION

SITE DATA

TOTAL PROPERTY AREA	196,397 SF (4.51 AC)
EXISTING IMPERVIOUS AREA	177,571 SF (4.08 AC)
EXISTING PERVIOUS AREA	18,826 SF (0.43 AC)
TOTAL EXISTING GREEN SPACE	9.59%
PROPOSED IMPERVIOUS AREA	176,275 SF (4.05 AC)
PROPOSED PERVIOUS AREA	20,122 SF (0.46 AC)
TOTAL PROPOSED GREEN SPACE	10.25%
TOTAL INTERIOR GREEN SPACE	6.10%
TOTAL LIMITS OF DISTURBANCE	15,677 SF (0.36 AC)
OFFSITE DISTURBANCE	0 SF (0.00 AC)
ONSITE DISTURBANCE	15,677 SF (0.36 AC)

PARKING CALCULATIONS

PROVIDED CUSTOMER PARKING	20
PROVIDED EMPLOYEE PARKING	30
PROVIDED SERVICE PARKING	30
TOTAL PROVIDED PARKING	80

REQUIRED PARKING:
2 X 10 CUSTOMERS = 20 STALLS
3 X 10 SERVICE BAYS = 30 STALLS (20 STORAGE)
1 X 10 SERVICE EMPLOYEES = 10 STALLS
1 X 20 SALES EMPLOYEES = 20 STALLS
TOTAL STALLS REQUIRED = 80 STALLS (80 STALLS PROVIDED)

ADA CALCULATION: 20+(30-20)+10+20 = 60 STALLS
PER ADA PARKING, FOR 60 STALLS 3 SHOULD BE ACCESSIBLE
3 ADA STALLS PROVIDED

PROVIDED VEHICLE DISPLAY PARKING	315

Know what's **below.**
Call before you dig.

R.A.SMITH, INC. ASSUMES NO RESPONSIBILITY FOR DAMAGES, LIABILITY OR COSTS RESULTING FROM CHANGES OR ALTERATIONS MADE TO THIS PLAN WITHOUT THE EXPRESSED WRITTEN CONSENT OF R.A.SMITH, INC.

ALL COPYRIGHTS TO THESE DRAWINGS ARE RESERVED. THEY MAY NOT BE COPIED, CHANGED, OR ASSIGNED TO ANY THIRD PARTY IN ANY MANNER WITHOUT OBTAINING THE EXPRESSED WRITTEN PERMISSION OF R.A.SMITH, INC.

DATE	DESCRIPTION

raSmith
CREATIVITY BEYOND ENGINEERING
16745 W. Bluemound Road
Brookfield, WI 53005-5938
(262) 781-1000
rasmith.com
Brookfield, WI | Milwaukee, WI | Appleton, WI | Madison, WI
Cedarburg, WI | Naperville, IL | Irvine, CA

RUSS DARROW KIA WAUKESHA
WAUKESHA, WISCONSIN

OVERALL SITE & LANDSCAPE PLAN

© COPYRIGHT 2025
R.A. Smith, Inc.

DATE: 1/21/2025
SCALE: 1" = 30'
JOB NO. 3200102.01
PROJECT MANAGER: RYAN J. LANCOUR, P.E.
DESIGNED BY: CRR
CHECKED BY: RJL

SHEET NUMBER
C300

J:\3200102\3200102\01\Dwg\Sheets\3200102.01 SP01.dwg, Overall Site, 1/21/2025 3:23:15 PM, crr

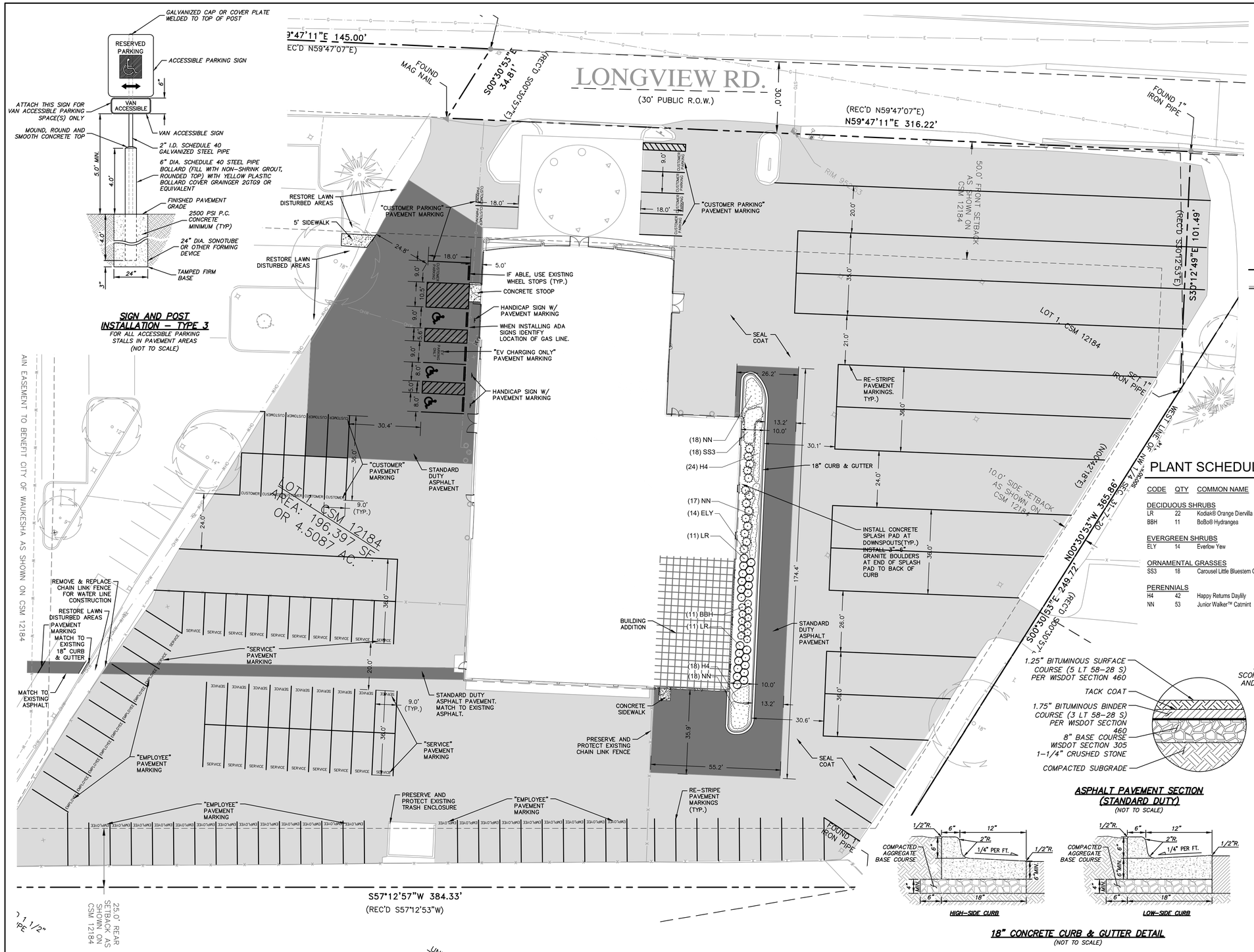

SIGN AND POST INSTALLATION – TYPE 3
FOR ALL ACCESSIBLE PARKING STALLS IN PAVEMENT AREAS
(NOT TO SCALE)

LEGEND

- PROPERTY LINE
- PROPOSED 18" CURB & GUTTER
- SEAL COAT
- STANDARD-DUTY ASPHALT PAVEMENT
- CONCRETE SIDEWALKS
- BUILDING ADDITION

PLANT SCHEDULE

CODE	QTY	COMMON NAME	BOTANICAL NAME	INSTALLED SIZE	ROOT	SPACING
DECIDUOUS SHRUBS						
LR	22	Kodiak® Orange Diervilla	Diervilla x 'G2X88544'	15" HT	CONT	Spacing as shown
BBH	11	BoBo® Hydrangea	Hydrangea paniculata 'ILVOBO''	18" HT	CONT	Spacing as shown
EVERGREEN SHRUBS						
ELY	14	Everlow Yew	Taxus x media 'Everlow'	15" HT	B&B	Spacing as shown
ORNAMENTAL GRASSES						
SS3	18	Carousel Little Bluestem Grass	Schizachyrium scoparium 'Carousel	1 GAL	CONT	24" Spacing
PERENNIALS						
H4	42	Happy Returns Daylily	Hemerocallis x 'Happy Returns'	4 1/2"	POT	18" Spacing
NN	53	Junior Walker™ Catmint	Nepeta x faassenii 'Novanepjun'	4 1/2"	POT	24" Spacing

ASPHALT PAVEMENT SECTION (STANDARD DUTY)
(NOT TO SCALE)

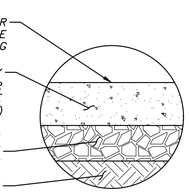

CONCRETE SIDEWALK PAVEMENT SECTION
(NOT TO SCALE)

18" CONCRETE CURB & GUTTER DETAIL
(NOT TO SCALE)

NOTES:
4,000 PSI CONCRETE SHALL BE USED IN CONSTRUCTION OF ALL CURB & GUTTER DETAILS. THE CONTRACTOR IS RESPONSIBLE FOR DETERMINING THE SLOPE OF THE GUTTER PAN. 1/2" PREFORMED EXPANSION JOINT FILLER SHALL BE PLACED TRANSVERSELY IN THE CURB AS FOLLOWS:
1) AT EACH JUNCTION OF RADIUS RETURN CURB AND THE CURB WHICH IS PARALLEL TO THE PROJECT CENTER LINE.
2) AT EACH JUNCTION WITH EXISTING CONCRETE CURB OR CONCRETE CURB & GUTTER.
3) AT EACH JUNCTION WITH EXISTING CONCRETE SIDEWALK, TO THE DEPTH OF THE SIDEWALK.

811 Know what's below. Call before you dig.

R.A.SMITH, INC. ASSUMES NO RESPONSIBILITY FOR DAMAGES, LIABILITY OR COSTS RESULTING FROM CHANGES OR ALTERATIONS MADE TO THIS PLAN WITHOUT THE EXPRESSED WRITTEN CONSENT OF R.A.SMITH, INC.

ALL COPYRIGHTS TO THESE DRAWINGS ARE RESERVED. THEY MAY NOT BE COPIED, CHANGED, OR ASSIGNED TO ANY THIRD PARTY IN ANY MANNER WITHOUT OBTAINING THE EXPRESSED WRITTEN PERMISSION OF R.A.SMITH, INC.

DATE	DESCRIPTION

raSmith
CREATIVITY BEYOND ENGINEERING
16745 W. Bluemound Road
Brookfield, WI 53005-5938
(262) 781-1000
rasmith.com
Brookfield, WI | Milwaukee, WI | Appleton, WI | Madison, WI
Cedarburg, WI | Naperville, IL | Irvine, CA.

RUSS DARROW KIA WAUKESHA
WAUKESHA, WISCONSIN
DETAILED SITE & LANDSCAPE PLAN

© COPYRIGHT 2025
R.A. Smith, Inc.

DATE: 1/21/2025
SCALE: 1" = 20'
JOB NO. 3200102.01
PROJECT MANAGER: RYAN J. LANCOUR, P.E.
DESIGNED BY: CRR
CHECKED BY: RJL

SHEET NUMBER
C301

P:\3200102\3200102.01\Dwg\Sheets\3200102.01 SP02.dwg, Site, 1/21/2025 3:23:28 PM, crr

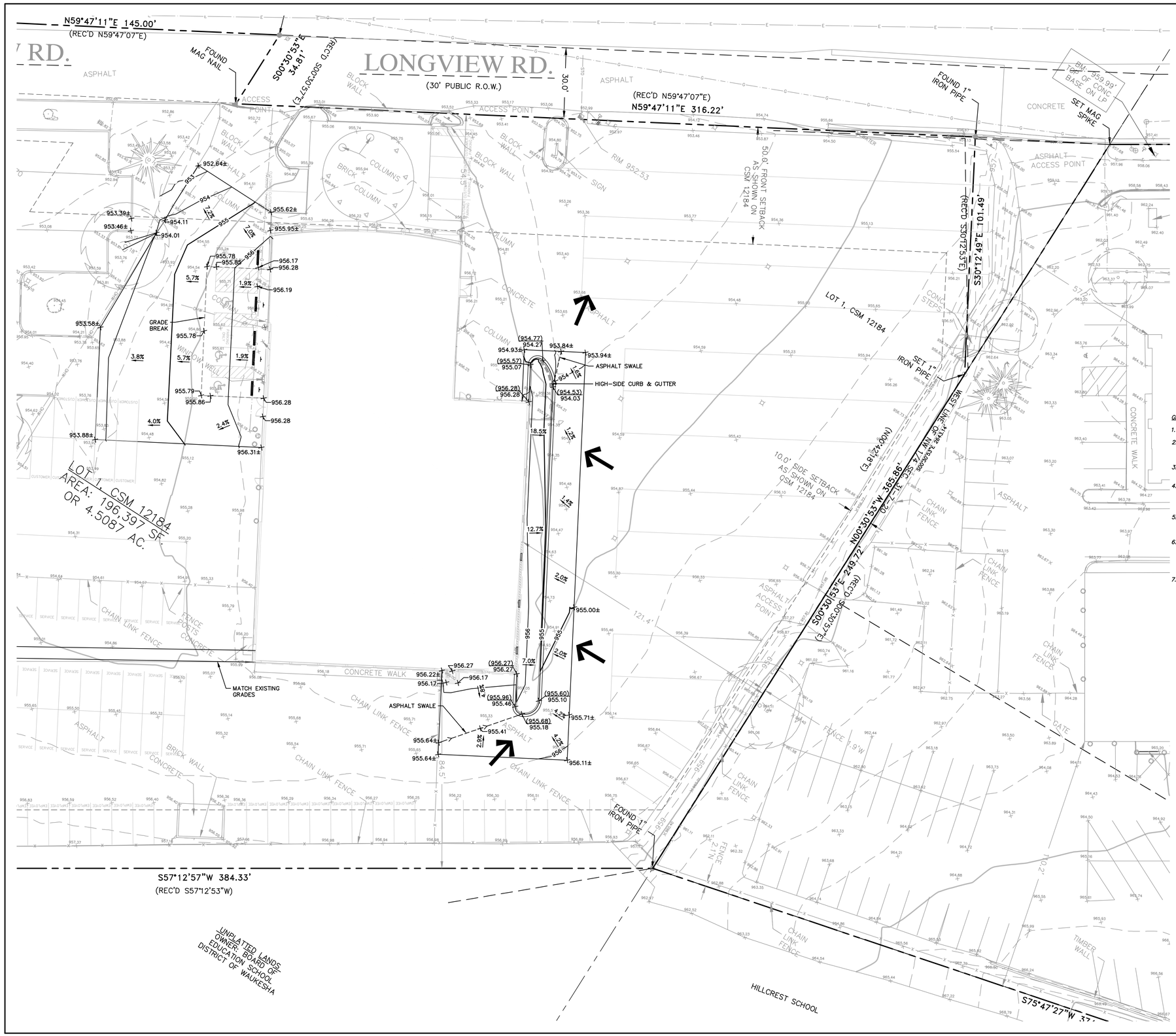

GRAPHIC SCALE

10 0 10 20 40

(IN FEET)

LEGEND

- PROPERTY LINE
- PROPOSED 18" HIGH-SIDE CURB & GUTTER
- 869 — PROPOSED 1-FOOT GRADE CONTOUR
- 870 — PROPOSED 5-FOOT GRADE CONTOUR
- 877.70 × — PROPOSED SPOT GRADE
- (877.70) × — PROPOSED TOP OF CURB
- 780 — EXISTING CONTOUR ELEVATION
- × 780.55 — EXISTING SPOT ELEVATION
- OVERLAND FLOW ROUTE

GRADING NOTES:

1. ALL SIDEWALKS TO BE SLOPED AT LESS THAN 5.0% AND NO MORE THAN 2.0% CROSS SLOPE
2. THE PROPOSED IMPROVEMENTS SHALL BE CONSTRUCTED ACCORDING TO THE D.O.T. STANDARD SPECIFICATIONS, LOCAL ORDINANCES AND SPECIFICATIONS, AND RECOMMENDATIONS IN THE GEOTECHNICAL REPORT.
3. THE CONTRACTOR SHALL MAINTAIN SITE DRAINAGE THROUGHOUT CONSTRUCTION. THIS MAY INCLUDE THE EXCAVATION OF TEMPORARY DITCHES OR PUMPING TO ALLEVIATE WATER PONDING.
4. SILT FENCE AND OTHER EROSION CONTROL FACILITIES MUST BE INSTALLED PRIOR TO CONSTRUCTION OR ANY OTHER LAND DISTURBING ACTIVITY. THE CONTRACTOR SHALL BE RESPONSIBLE FOR REMOVING ALL EROSION CONTROL FACILITIES ONCE THE THREAT OF EROSION HAS PASSED WITH THE APPROVAL OF THE GOVERNING AGENCY.
5. THE CONTRACTOR SHALL ASSUME SOLE RESPONSIBILITY FOR THE COMPUTATIONS OF ALL GRADING AND FOR ACTUAL LAND BALANCE, INCLUDING UTILITY TRENCH SPOIL. THE CONTRACTOR SHALL IMPORT OR EXPORT MATERIAL AS NECESSARY TO COMPLETE THE PROJECT.
6. GRADING SHALL CONSIST OF CLEARING AND GRUBBING EXISTING VEGETATION, STRIPPING TOPSOIL, REMOVAL OF EXISTING PAVEMENT OR FOUNDATIONS, IMPORTING OR EXPORTING MATERIAL TO ACHIEVE AND ON-SITE EARTHWORK BALANCE, GRADING THE PROPOSED BUILDING PAD AND PAVEMENT AREAS, SCARIFYING AND FINAL COMPACTION OF THE PAVEMENT SUBGRADE, AND PLACEMENT OF TOPSOIL.
7. NO FILL SHALL BE PLACED ON A WET OR SOFT SUBGRADE. THE SUBGRADE SHALL BE PROOF-ROLLED AND INSPECTED BY THE GEOTECHNICAL ENGINEER BEFORE ANY MATERIAL IS PLACED.

811 Know what's below. Call before you dig.

R.A.SMITH, INC. ASSUMES NO RESPONSIBILITY FOR DAMAGES, LIABILITY OR COSTS RESULTING FROM CHANGES OR ALTERATIONS MADE TO THIS PLAN WITHOUT THE EXPRESSED WRITTEN CONSENT OF R.A.SMITH, INC.

ALL COPYRIGHTS TO THESE DRAWINGS ARE RESERVED. THEY MAY NOT BE COPIED, CHANGED, OR ASSIGNED TO ANY THIRD PARTY IN ANY MANNER WITHOUT OBTAINING THE EXPRESSED WRITTEN PERMISSION OF R.A.SMITH, INC.

DATE	DESCRIPTION

raSmith
CREATIVITY BEYOND ENGINEERING
16745 W. Bluemound Road
Brookfield, WI 53005-5938
(262) 781-1000
rasmith.com
Brookfield, WI | Milwaukee, WI | Appleton, WI | Madison, WI
Cedarburg, WI | Naperville, IL | Irvine, CA

RUSS DARROW KIA WAUKESHA
WAUKESHA, WISCONSIN

GRADING PLAN

© COPYRIGHT 2025
R.A. Smith, Inc.

DATE: 1/21/2025

SCALE: 1" = 20'

JOB NO. 3200102.01

PROJECT MANAGER: RYAN J. LANCOUR, P.E.

DESIGNED BY: CRR

CHECKED BY: RJL

SHEET NUMBER

C400

P:\3200102\3200102.01\Dwg\Sheets\3200102.01 GP01.dwg, Grading, 1/21/2025 3:23:31 PM, crr

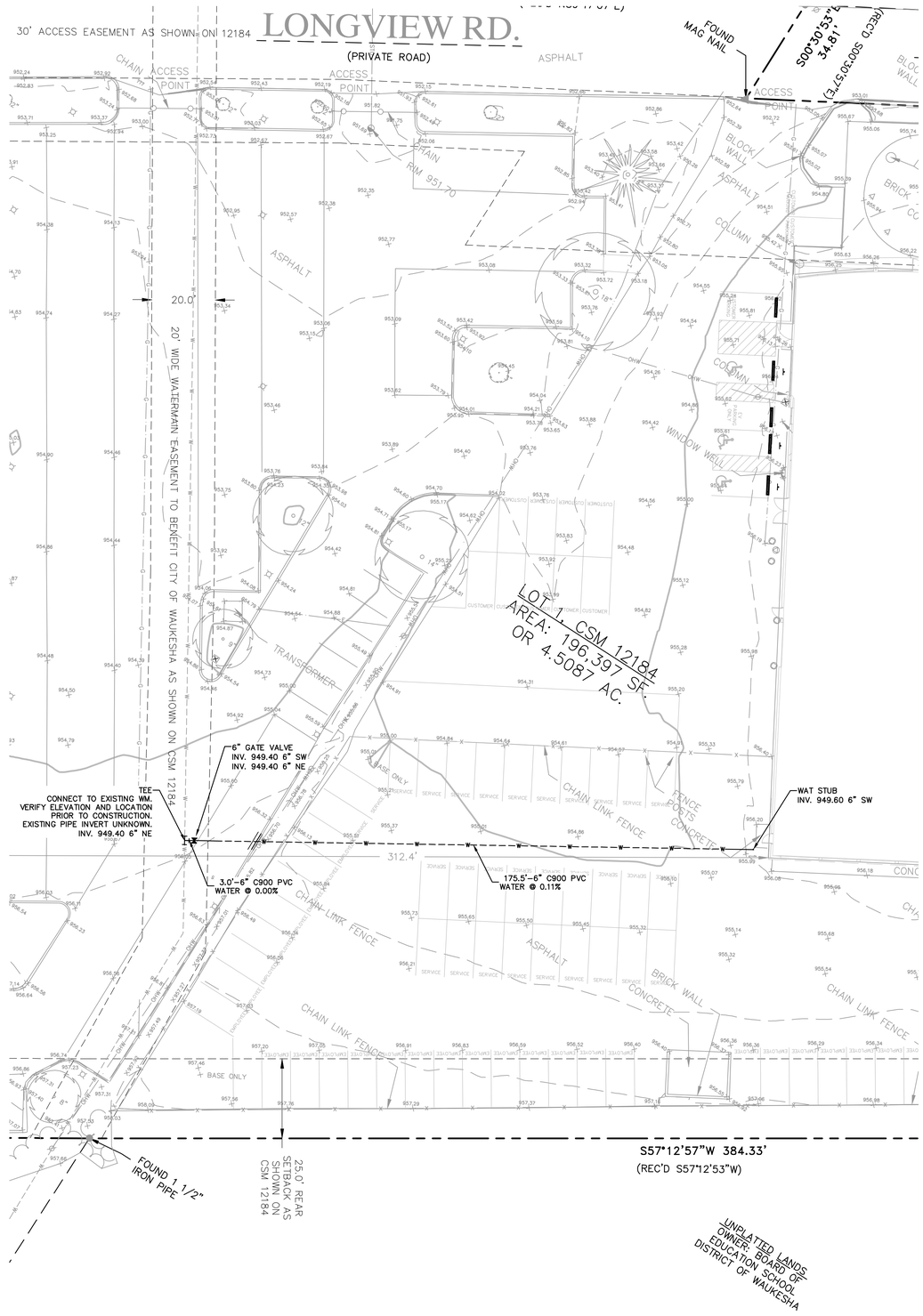

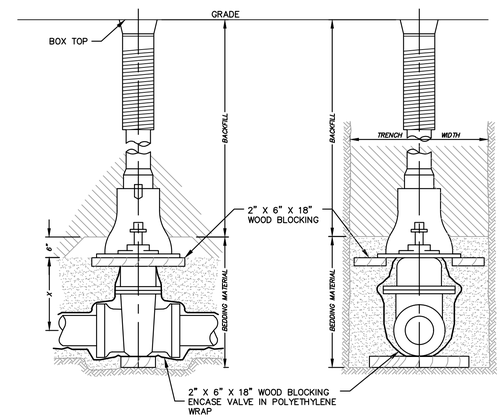

SIDE VIEW

FRONT VIEW

PIPE DIA. INCHES	X=SETTING INCHES
2	6
3	7
4	8
6	12
8	13
10	17
12	21
16	30

REF: CHAP. 4.8.0

STANDARD GATE VALVE BOX SETTING

NOT TO SCALE | **FILE NO. 37**

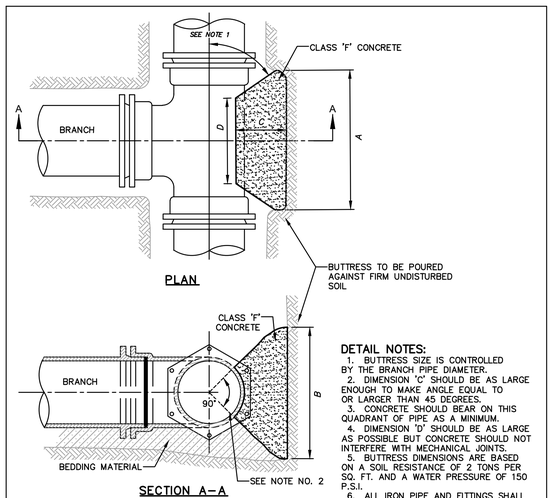

PLAN

SECTION A–A

DETAIL NOTES:

1. BUTTRESS SIZE IS CONTROLLED BY THE BRANCH PIPE DIAMETER.
2. DIMENSION 'C' SHOULD BE AS LARGE ENOUGH TO MAKE ANGLE EQUAL TO OR LARGER THAN 45 DEGREES.
3. CONCRETE SHOULD BEAR ON THIS QUADRANT OF PIPE AS A MINIMUM.
4. DIMENSION 'D' SHOULD BE AS LARGE AS POSSIBLE BUT CONCRETE SHOULD NOT INTERFERE WITH MECHANICAL JOINTS.
5. BUTTRESS DIMENSIONS ARE BASED ON A SOIL RESISTANCE OF 2 TONS PER SQ. FT. AND A WATER PRESSURE OF 150 P.S.I.
6. ALL IRON PIPE AND FITTINGS SHALL BE WRAPPED IN POLYETHYLENE.

BUTTRESS DIMENSIONS

PIPE DIA.	A	B	C	D
4"	0'-10"	1'-6"	SEE NOTE NO. 2	SEE NOTE NO. 4
6"	1'-8"	1'-8"		
8"	1'-9"	2'-4"		
10"	1'-9"	2'-4"		
12"	2'-3"	2'-7"		
16"	3'-8"	2'-10"		
20"	5'-0"	3'-10"		
24"	5'-4"	4'-8"		

B D = BRANCH DIAMETER

REF: SEC. 4.3.13.

BUTTRESS FOR 11.25 DEG. & 22.5 DEG. BENDS

NOT TO SCALE DECEMBER 2003 | **FILE NO. 46**

LEGEND

- PROPERTY LINE
- STO — EXISTING STORM SEWER
- S — EXISTING SANITARY SEWER
- W — EXISTING WATER MAIN
- T — EXISTING TELEPHONE
- E — EXISTING ELECTRIC
- G — EXISTING GAS
- W — PROPOSED WATER LINE

N

GRAPHIC SCALE
10 0 10 20 40
(IN FEET)

NOTES:

1. ALL PIPE LENGTHS ARE TO CENTER OF EXISTING OR PROPOSED STRUCTURE.
2. CONTRACTOR SHALL FIELD VERIFY ALL PROPOSED POINTS OF CONNECTION TO EXISTING PIPE, STRUCTURES OR KNOWN CROSSINGS PRIOR TO PROPOSED UTILITY CONSTRUCTION. CONTACT ENGINEER FOR POSSIBLE REDESIGN IF EXISTING PIPE SIZES OR INVERTS VARY FROM THIS PLAN.
3. CONTRACTOR SHALL FIELD ADJUST ALL EXISTING UTILITY STRUCTURES TO PROPOSED GRADE WITHIN THE PROJECT LIMITS. SEE GRADING & DRAINAGE PLANS FOR PROPOSED RIM GRADES.
4. ALL CONSTRUCTION SHALL BE IN ACCORDANCE WITH THE STANDARDS SPECIFICATIONS FOR WATER AND SEWER CONSTRUCTION IN WISCONSIN, LATEST EDITION.
5. CONTRACTOR TO FIELD LOCATE ALL EXISTING LATERAL LOCATIONS & ELEVATIONS PRIOR TO UTILITY CONSTRUCTION.
6. ALL WATER SERVICES SHALL HAVE MINIMUM 6.0' OF COVER.
7. CONTRACTOR SHALL COORDINATE FINAL SIZING WITH THE OWNER PRIOR TO PROCUREMENT OF THE GREASE INTERCEPTOR(S).
8. CONTRACTOR TO MAINTAIN MINIMUM 18" CLEARANCE WHEN WATER MAIN CROSSES UNDER SANITARY SEWER, AND 6" MINIMUM UNDER STORM SEWER. PROVIDE 2" INSULATION BETWEEN WATER MAIN AND SEWER CROSSINGS WHERE THE VERTICAL SEPARATION IS LESS THAN 2.0'.
9. ALL VALVES INSTALLED AT GREATER THAN 8 FEET OF DEPTH SHALL BE PROVIDED WITH VALVE STEM EXTENSIONS TO BRING THE OPERATING NUT UP TO A NORMAL DEPTH (EQUIVALENT TO A VALVE AT 8 FEET OF DEPTH). THE EXTENSION SHALL BE SECURED TO THE OPERATING NUT WITH AT LEAST 2 SET SCREWS DRILLED INTO THE NUT. PROVIDE A CENTERING RING AT THE TOP OF THE EXTENSION.
10. THE STORM WATER FACILITY SHALL BE INSPECTED BY A CITY OF WAUKESHA INSPECTOR AT LEAST ONCE DURING CONSTRUCTION AND ONCE AFTER THE FINAL SITE STABILIZATION OF THE SITE.
11. SEWER LATERAL VIDEO. THE EXISTING BUILDING HAS A SANITARY SEWER LATERAL CONNECTING THE CITY'S SEWER MAIN. PLEASE PROVIDE A SEWER LATERAL VIDEO TO CITY FOR REVIEW AND APPROVAL. CONTACT THE CITY ENGINEERING DEPARTMENT FOR VIDEO FORMAT. IF THE LATERAL MAINTENANCE IS NEEDED, THEN THE LATERAL IMPROVEMENTS MAY NEED TO BE INCLUDED AS PART OF THIS PROJECT. THE LATERAL PIPE CONNECTION TO THE MAIN MAY NEED TO BE LINED OR RELAYED TO REDUCE INFILTRATION INTO THE CITY'S SANITARY SEWER SYSTEM OR IMPROVE THE STRUCTURAL INTEGRITY.
12. A RECORD DRAWING OF THE SANITARY/STORM SEWER FACILITIES SEALED BY A PROFESSIONAL ENGINEER OR REGISTERED LANDSUREYVOR SHALL BE SUBMITTED TO THE ENGINEERING DEPARTMENT.
13. THE CONTRACTOR SHALL VERIFY THE EXISTING STORM PIPE MATERIAL THAT THE PROPOSED PIPE IS BEING CONNECTED TO.

Know what's **below.**
Call before you dig.

R.A.SMITH, INC. ASSUMES NO RESPONSIBILITY FOR DAMAGES, LIABILITY OR COSTS RESULTING FROM CHANGES OR ALTERATIONS MADE TO THIS PLAN WITHOUT THE EXPRESSED WRITTEN CONSENT OF R.A.SMITH, INC.

ALL COPYRIGHTS TO THESE DRAWINGS ARE RESERVED. THEY MAY NOT BE COPIED, CHANGED, OR ASSIGNED TO ANY THIRD PARTY IN ANY MANNER WITHOUT OBTAINING THE EXPRESSED WRITTEN PERMISSION OF R.A.SMITH, INC.

DATE	DESCRIPTION

raSmith
CREATIVITY BEYOND ENGINEERING
16745 W. Bluemound Road
Brookfield, WI 53005-5938
(262) 781-1000
rasmith.com
Brookfield, WI | Milwaukee, WI | Appleton, WI | Madison, WI
Cedarburg, WI | Naperville, IL | Irvine, CA

RUSS DARROW KIA WAUKESHA
WAUKESHA, WISCONSIN

UTILITY PLAN

© COPYRIGHT 2025
R.A. Smith, Inc.

DATE: 1/21/2025

SCALE: 1" = 20'

JOB NO. 3200102.01

PROJECT MANAGER: RYAN J. LANCOUR, P.E.

DESIGNED BY: CRR

CHECKED BY: RJL

SHEET NUMBER

C500

P:\3200102\3200102.01\Dwg\Sheets\3200102.01 UP01.dwg, Utility, 1/21/2025 3:23:42 PM, crr

DIVISION 1 – GENERAL REQUIREMENTS

01 41 00 – REGULATORY REQUIREMENTS

1. THE LATEST EDITIONS OF THE FOLLOWING DOCUMENTS AND ANY SUPPLEMENTS THERETO, SHALL GOVERN ALL CONSTRUCTION ITEMS ON THIS PLAN UNLESS OTHERWISE NOTED:
   a. WISCONSIN DEPARTMENT OF NATURAL RESOURCES (WDNR) STORM WATER TECHNICAL STANDARDS
   b. WISCONSIN EROSION CONTROL PRODUCT ACCEPTABILITY LIST
   c. STANDARD SPECIFICATIONS FOR SEWER AND WATER CONSTRUCTION IN WISCONSIN (SSSWCW)
   d. WISCONSIN ADMINISTRATIVE CODE, SECTIONS SPS 381–387
   e. WISCONSIN DEPARTMENT OF TRANSPORTATION (WISDOT) STANDARD SPECIFICATIONS FOR HIGHWAY AND STRUCTURE CONSTRUCTION
   f. WISCONSIN DEPARTMENT OF TRANSPORTATION (WISDOT) APPROVED PRODUCT LISTS (APL)
   g. FEDERAL HIGHWAY ADMINISTRATION MANUAL OF UNIFORM TRAFFIC CONTROL DEVICES (MUTCD)
   h. WISCONSIN MANUAL ON UNIFORM TRAFFIC CONTROL DEVICES (WMUTCD)
   i. UNITED STATES DEPARTMENT OF JUSTICE ADA STANDARDS
   j. UNITED STATES DEPARTMENT OF TRANSPORTATION ADA STANDARDS FOR TRANSPORTATION FACILITIES
   k. MUNICIPALITY DEVELOPMENT STANDARDS
   l. COUNTY DEVELOPMENT STANDARDS
2. THE OWNER, ENGINEER AND MUNICIPALITY SHALL BE NOTIFIED AT LEAST 48 HOURS IN ADVANCE OF PERFORMING ANY CONSTRUCTION ACTIVITIES.
3. THE CONTRACTOR IS RESPONSIBLE FOR OBTAINING COPIES OF ALL PERMITS AND FOR ABIDING BY ALL PERMIT REQUIREMENTS AND RESTRICTIONS.
4. THE CONTRACTOR SHALL BE SOLELY RESPONSIBLE FOR COMPLYING WITH ALL FEDERAL, STATE, AND LOCAL SAFETY REQUIREMENTS TOGETHER WITH EXERCISING PRECAUTIONS AT ALL TIMES FOR THE PROTECTION OF PERSONS (INCLUDING EMPLOYEES) AND PROPERTY. IT IS ALSO THE RESPONSIBILITY OF THE CONTRACTOR TO INITIATE, MAINTAIN, AND SUPERVISE ALL SAFETY REQUIREMENTS, PRECAUTIONS, AND PROGRAMS IN CONNECTION WITH THE WORK.
5. SHOP DRAWINGS AND/OR MANUFACTURER'S PRODUCT DATA SUBMITTALS ARE REQUIRED ONLY IF THE PRODUCT OR METHOD OF CONSTRUCTION IS DIFFERENT FROM THAT SPECIFIED OR IF REQUIRED BY THE MUNICIPAL ENGINEER.
   a. ALL DOCUMENTS SUBMITTED FOR REVIEW SHALL HAVE THE SPECIFIC MATERIAL, PART, SIZE, ETC. HIGHLIGHTED IN SOME FASHION. EXAMPLE: A FITTING CUT SHEET HAS MULTIPLE PRESSURE RATING FOR DIFFERENT SIZE BENDS. HIGHLIGHT THE PRESSURE CLASS & SIZE TO BE USED ON PROJECT. ALL SUBMITTALS NOT PROPERLY IDENTIFYING THE SPECIFIC MATERIAL BEING USED WILL BE REJECTED.
   b. CONTRACTOR SHALL SUBMIT A PDF COPY AND AN EXPLANATION AS TO HOW THE SUBSTITUTION MEETS THE PROPOSED DESIGN (PRODUCT SPECIFICATION SHEETS WITHOUT EXPLANATION WILL NOT BE ACCEPTED) TO THE OWNER'S REPRESENTATIVE OR ENGINEER FOR REVIEW AND APPROVAL. THE CONTRACTOR SHALL NOT PROCEED UNTIL THE OWNER'S APPROVAL IS GIVEN. IN PROJECT SCHEDULING CONTRACTOR SHALL ACCOUNT FOR 5 WORKING DAYS FOR SUBMITTAL REVIEW. IN THE EVENT SUCH SUBSTITUTION IS APPROVED, THE OWNER WILL REQUIRE FROM THE CONTRACTOR A CREDITED DEDUCTION FROM THE CONTRACT AMOUNT EQUAL TO ANY SAVINGS IN MATERIAL COST RESULTING FROM USE OF THE PROPOSED SUBSTITUTE.
6. THE CONTRACTOR SHALL ASSUME COMPLETE AND SOLE RESPONSIBILITY FOR THE QUALITY OF WORK. IF CHANGES OR ADJUSTMENTS ARE RECOMMENDED BY THE CONTRACTOR, THEY MAY BE MADE ONLY UPON WRITTEN APPROVAL OF THE OWNER OR THEIR REPRESENTATIVE.
   a. ALL WORK SHALL BE DONE IN COMPLIANCE WITH THE CONTRACT DOCUMENTS. THE OWNER OR THEIR REPRESENTATIVE SHALL DECIDE ALL QUESTIONS WHICH SHALL ARISE AS TO THE QUALITY AND ACCEPTABILITY OF MATERIALS FURNISHED, WORK PERFORMED, AND WORKMANSHIP. INTERPRETATION OF THE PLANS AND SPECIFICATIONS BY THE OWNER OR THEIR REPRESENTATIVE SHALL DETERMINE THE AMOUNT OF WORK PERFORMED AND MATERIALS FURNISHED.
   b. FAILURE OR NEGLIGENCE ON THE PART OF THE OWNER OR THEIR REPRESENTATIVE TO CONDEMN OR REJECT SUBSTANDARD OR INFERIOR WORK OR MATERIALS SHALL NOT BE CONSTRUED TO IMPLY AN ACCEPTANCE OF SUCH WORK OR MATERIALS, IF IT BECOMES EVIDENT AT ANY TIME PRIOR TO THE FINAL ACCEPTANCE OF THE WORK BY THE OWNER. NEITHER SHALL IT BE CONSTRUED AS BARRING THE OWNER, AT ANY SUBSEQUENT TIME, FROM THE RECOVERY OF DAMAGES OR OF SUCH A SUM OF MONEY AS MAY BE NEEDED TO BUILD ANEW ALL PORTIONS OF THE SUBSTANDARD OR INFERIOR WORK OR REPLACEMENT OF IMPROPER MATERIALS WHEREVER FOUND.
   c. INSPECTORS EMPLOYED BY THE OWNER SHALL BE AUTHORIZED TO INSPECT ALL WORK DONE AND ALL MATERIAL FURNISHED. SUCH INSPECTION MAY EXTEND TO ALL OR ANY PART OF THE WORK AND TO THE PREPARATION, FABRICATION OR MANUFACTURE OF THE MATERIALS TO BE USED. THE INSPECTOR IS NOT AUTHORIZED TO REVOKE, ALTER OR WAIVE ANY REQUIREMENTS OF THE SPECIFICATIONS, NOR IS HE AUTHORIZED TO APPROVE OR ACCEPT ANY PORTION OF THE COMPLETED PROJECT. HE SHALL CALL THE ATTENTION OF THE CONTRACTOR TO ANY FAILURE OF THE WORK OR MATERIALS TO CONFORM TO THE SPECIFICATIONS AND CONTRACT, AND SHALL HAVE THE AUTHORITY TO REJECT MATERIALS. ANY DISPUTE BETWEEN THE INSPECTOR AND CONTRACTOR SHALL BE REFERRED TO THE OWNER OR THEIR REPRESENTATIVE. ANY ADVICE WHICH THE INSPECTOR MAY GIVE THE CONTRACTOR SHALL IN NO WAY BE CONSTRUED AS BINDING THE ENGINEER IN ANY WAY OR RELEASING THE CONTRACTOR FROM FULFILLING ANY OF THE TERMS OF THE CONTRACT.
   d. ALL MATERIALS AND EACH PART OF DETAIL OF THE WORK SHALL BE SUBJECT AT ALL TIMES TO INSPECTION BY THE OWNER OR HIS AUTHORIZED REPRESENTATIVE OR THE AUTHORITY HAVING JURISDICTION AND THE CONTRACTOR WILL BE HELD STRICTLY TO THE TRUE INTENT OF THE SPECIFICATIONS IN REGARD TO QUALITY OF MATERIALS, WORKMANSHIP, AND THE DILIGENT EXECUTION OF THE CONTRACT. SUCH INSPECTION MAY INCLUDE MILL, PLANT OR SHOP INSPECTION, AND ANY MATERIAL FURNISHED UNDER THESE SPECIFICATIONS IS SUBJECT TO SUCH INSPECTION. THE OWNER OR HIS REPRESENTATIVES SHALL BE ALLOWED ACCESS TO ALL PART OF THE WORK, AND SHALL BE FURNISHED WITH SUCH INFORMATION AND ASSISTANCE BY THE CONTRACTOR AS IS DETERMINED BY THE OWNER OR HIS REPRESENTATIVE, TO MAKE A COMPLETE AND DETAILED INSPECTION.
   e. ALL WORKMANSHIP SHALL CONFORM TO THE BEST STANDARD PRACTICE. UNLESS OTHERWISE SPECIFIED, THE SPECIFICATIONS OR RECOGNIZED ASSOCIATION OF MANUFACTURERS AND CONTRACTORS OR INDUSTRIAL MANUFACTURERS SHALL BE USED AS GUIDES FOR THE STANDARDS OF WORKMANSHIP.
   f. ALL EXPOSED ITEMS OF WORK SHALL PRESENT A NEAT WORKMANLIKE APPEARANCE AND SHALL BE AS TRUE TO SHAPE AND ALIGNMENT AS POSSIBLE TO OBTAIN WITH MEASURING OR LEVELING INSTRUMENTS GENERALLY USED IN THE RESPECTIVE TYPES OF WORK. ITEMS OF WORK SHALL BE SOUND AND FULLY PROTECTED AGAINST DAMAGE AND PREMATURE DETERIORATION. IT IS SPECIFICALLY UNDERSTOOD THAT IN ALL QUESTIONS OF QUALITY AND ACCEPTABILITY OF WORKMANSHIP, THE CONTRACTOR AGREES TO ABIDE BY THE DECISION OF THE OWNER OR THEIR REPRESENTATIVE.
   g. ALL MATERIALS AND WORKMANSHIP NOT CONFORMING TO THE REQUIREMENTS OF THE CONTRACT DOCUMENTS SHALL BE CONSIDERED AS DEFECTIVE, AND ALL SUCH MATERIALS, WHETHER IN–PLACE OR NOT, SHALL BE REJECTED AND SHALL BE REMOVED FROM THE WORK BY THE CONTRACTOR AT HIS EXPENSE. UPON FAILURE ON THE PART OF THE CONTRACTOR TO COMPLY WITH ANY ORDER OF THE OWNER RELATIVE TO THE PROVISIONS OF THIS ARTICLE, THE OWNER SHALL HAVE THE AUTHORITY TO REMOVE AND REPLACE SUCH DEFECTIVE MATERIAL AND TO DEDUCT THE COST OF REMOVAL AND REPLACEMENT FROM ANY MONIES DUE OR WHICH MAY BECOME DUE THE CONTRACTOR.
   h. THE CONTRACTOR SHALL KEEP A LEGIBLE COPY OF THE PLANS, SPECIFICATIONS, AND ALL PERMITS AT THE SITE OF THE WORK AT ALL TIMES.
   i. AT THE COMPLETION OF THE WORK AND PRIOR TO FINAL PAYMENT, THE CONTRACTOR SHALL PROVIDE THE OWNER OR THEIR REPRESENTATIVE WITH A MARKED–UP SET OF DRAWINGS SHOWING ALL CHANGES OR VARIATIONS FROM THE ORIGINAL DRAWINGS. THESE CHANGES SHALL BE MADE ON A SET OF FIELD DRAWINGS AS THE WORK TAKES PLACE, NOT AFTER THE WORK IS COMPLETE. THIS SET OF DRAWINGS SHOULD BE KEPT CLEAN IN A LOCATION AT THE SITE WHERE THE OWNER OR THEIR REPRESENTATIVE MAY EXAMINE THEM.
   j. THE MARKED–UP DRAWINGS SHALL BE ACCURATE. ARBITRARY MARKINGS ARE OF NO VALUE. CAREFUL MEASUREMENTS SHALL BE MADE TO LOCATE UNDERGROUND EXTERIOR AND UNDERGROUND INTERIOR SEWERS, GAS LINES, WATER LINES, ELECTRICAL CONDUIT AND MISCELLANEOUS PIPING.
7. CONTRACTOR IS RESPONSIBLE FOR ALL TRAFFIC CONTROL, TRAFFIC CONTROL PLANS AND PERMITTING FOR ALL WORK TO BE COMPLETED ONSITE OR IN THE PUBLIC RIGHT–OF WAY.

01 70 00 – EXECUTION & CLOSEOUT REQUIREMENTS

1. THE CONTRACTOR IS RESPONSIBLE FOR EXAMINING ALL EXISTING SITE CONDITIONS PRIOR TO COMMENCEMENT OF CONSTRUCTION AND SHALL COMPARE WITH THIS PLAN.
2. EXISTING UTILITY INFORMATION IS PROVIDED FOR INFORMATIONAL PURPOSES ONLY, BASED ON BEST AVAILABLE PUBLIC RECORDS, AS–BUILT DRAWINGS, AND FIELD OBSERVATIONS. NO RESPONSIBILITY IS ASSUMED BY THE OWNER OR ENGINEER FOR ACCURACY OR COMPLETENESS. THE CONTRACTOR IS RESPONSIBLE FOR MAKING THEIR OWN DETERMINATION AS TO THE TYPE AND NATURE OF EXISTING UTILITIES, AS MAY BE NECESSARY TO AVOID DAMAGE THERETO.
3. THE CONTRACTOR SHALL VERIFY ALL LOCATIONS, ELEVATIONS, AND SIZES OF EXISTING UTILITIES AND SHALL CHECK ALL PROPOSED UTILITY CONNECTIONS AND CROSSINGS PRIOR TO PROCEEDING WITH ANY WORK. ANY CONFLICTS SHALL BE REPORTED TO THE ENGINEER SO REDESIGN MAY OCCUR IF NEEDED. COST OF REPLACEMENT OR REPAIR OF EXISTING UTILITIES DAMAGED AS A RESULT OF THE CONTRACTOR'S OPERATIONS SHALL BE THE SOLE RESPONSIBILITY OF THE CONTRACTOR.
4. THE CONTRACTOR IS RESPONSIBLE FOR VERIFYING SOIL CONDITIONS PRIOR TO COMMENCEMENT OF CONSTRUCTION. A GEOTECHNICAL REPORT MAY BE AVAILABLE FROM THE OWNER. THE CONTRACTOR SHALL ABIDE BY THE RECOMMENDATIONS OF THE GEOTECHNICAL REPORT AND SUBSEQUENT RECOMMENDATIONS OF THE GEOTECHNICAL ENGINEER DURING CONSTRUCTION.
5. THE CONTRACTOR SHALL FIELD VERIFY ELEVATIONS OF THE BENCHMARKS AND HORIZONTAL CONTROL BY REFERENCING SHOWN COORDINATES TO KNOWN PROPERTY LINES, AND SHALL NOTIFY THE ENGINEER OF DISCREPANCIES IN EITHER VERTICAL OR HORIZONTAL CONTROL PRIOR TO PROCEEDING WITH ANY WORK.
6. SURVEY BENCHMARKS AND CONTROL POINTS SHALL BE MAINTAINED AND PROTECTED FROM DISTURBANCE.
7. PROPERTY CORNERS SHALL BE CAREFULLY PROTECTED AT ALL TIMES. PROPERTY MONUMENTS DISTURBED BY THE CONTRACTOR'S OPERATIONS SHALL BE REPLACED AT THE CONTRACTOR'S EXPENSE.
8. ANY ADJACENT PROPERTIES OR ROAD RIGHT–OF–WAYS WHICH ARE DAMAGED DURING CONSTRUCTION SHALL BE RESTORED BY THE CONTRACTOR. THE COST OF RESTORATION IS CONSIDERED INCIDENTAL AND SHALL BE INCLUDED.
9. PUBLIC ROADS SHALL NOT BE FULLY CLOSED TO TRAFFIC AT ANY TIME. ALL INGRESS AND EGRESS TRAFFIC TO THE PROJECT SITE SHALL BE LIMITED TO THE CONSTRUCTION ENTRANCE.
10. THE CONTRACTOR SHALL BE SOLELY RESPONSIBLE FOR DETERMINING QUANTITIES, SHALL BID ON THEIR OWN ESTIMATE OF THE WORK REQUIRED, AND SHALL NOT RELY ON THE ENGINEER'S ESTIMATE.
11. REQUESTS FOR CLARIFICATION WILL BE INTERPRETED BY THE OWNER/ENGINEER PRIOR TO AWARD OF CONTRACT, AND WHEN NECESSARY, OFFICIAL WRITTEN RESPONSES WILL BE ISSUED. OFFICIAL WRITTEN RESPONSES SHALL BE BINDING TO THE WORK. IN NO WAY SHALL VERBAL DIALOGUE CONSTITUTE OFFICIAL RESPONSE.
12. SHOULD ANY DISCREPANCIES BE DISCOVERED BY THE CONTRACTOR AFTER AWARD OF CONTRACT, NOTIFY OWNER/ENGINEER IN WRITING IMMEDIATELY. CONSTRUCTION OF ITEMS AFFECTED BY THE DISCREPANCIES SHALL NOT COMMENCE OR CONTINUE UNTIL AN OFFICIAL WRITTEN RESPONSE IS ISSUED.
13. ALL WORK SHALL BE GUARANTEED BY THE CONTRACTOR FOR A MINIMUM PERIOD OF 12 MONTHS FROM THE DATE OF FINAL ACCEPTANCE. THIS GUARANTEE SHALL INCLUDE ALL DEFECTS IN MATERIALS AND WORKMANSHIP.
14. THE CONTRACTOR SHALL INDEMNIFY THE OWNER, THE ENGINEER, AND THE MUNICIPALITY, THEIR AGENTS, ETC., FROM ALL LIABILITY INVOLVED WITH THE CONSTRUCTION, INSTALLATION, AND TESTING OF THE WORK ON THIS PROJECT.

DIVISION 31 – EARTHWORK

31 10 00 – SITE CLEARING & DEMOLITION

1. WORK SHALL CONSIST OF DEMOLITION, ABANDONMENT, AND REMOVAL OF EXISTING FOUNDATIONS, WALLS, SLABS, FENCES, PIPING, PAVEMENTS, AND OTHER MANMADE ITEMS INTERFERING WITH NEW CONSTRUCTION. WORK SHALL ALSO CONSIST OF CLEARING AND GRUBBING OF TREES, SHRUBS, VEGETATION, ROOTS, STUMPS, RUBBISH, AND OTHER PERISHABLE MATTER INTERFERING WITH NEW CONSTRUCTION.
2. ALL ITEMS SHALL INCLUDE ALL NECESSARY MATERIALS AND LABOR TO COMPLETE THE ITEM IN PLACE.
3. CALL 811 TO NOTIFY UTILITY PROVIDERS AND REQUEST FIELD LOCATION OF EXISTING UTILITIES WITHIN PROJECT LIMITS PRIOR TO ANY CONSTRUCTION RELATED ACTIVITIES.
4. INSTALL PERIMETER FENCING AS INDICATED PRIOR TO COMMENCING ANY CONSTRUCTION RELATED ACTIVITY.
5. CLEARLY IDENTIFY ALL VEGETATION TO BE PRESERVED AND/OR RELOCATED PRIOR TO CLEARING AND GRUBBING.
6. PROTECT EXISTING IMPROVEMENTS TO REMAIN DURING CONSTRUCTION. ANY DAMAGED IMPROVEMENTS SHALL BE RESTORED TO ORIGINAL CONDITION, OR AS OTHERWISE ACCEPTABLE TO THE OWNER.
7. REMOVE EXISTING ABOVE–GRADE AND BELOW–GRADE IMPROVEMENTS AS INDICATED AND AS NECESSARY TO CONSTRUCT PROPOSED IMPROVEMENTS.
8. SAWCUT ALL PAVEMENT TO BE REMOVED IN STRAIGHT LINES TO FULL DEPTH.
9. DEMOLISH CONCRETE AND MASONRY IN SMALL SECTIONS. BREAK UP CONCRETE SLABS THAT ARE 2 FEET OR MORE BELOW PROPOSED SUBGRADE TO PERMIT DRAINAGE.
10. DISCONNECT AND SEAL/CAP EXISTING UTILITIES TO BE REMOVED, RELOCATED, OR ABANDONED IN ACCORDANCE WITH REQUIREMENTS OF UTILITY PROVIDERS.
11. THE CONTRACTOR IS RESPONSIBLE FOR VERIFYING OWNERSHIP OF AND COORDINATING NECESSARY REMOVAL AND/OR RELOCATION OF ALL EXISTING UTILITIES WITHIN THE PROJECT LIMITS.
12. DO NOT INTERRUPT UTILITY SERVICE TO EXISTING FACILITIES UNLESS PERMITTED BY THE OWNER.
13. VOIDS LEFT BY REMOVALS SHALL BE LEVELED TO PREVENT PONDING OF WATER.
14. REMOVE AND LEGALLY DISPOSE OF DEMOLISHED MATERIALS, TRASH, AND DEBRIS FROM THE PROJECT SITE. RUBBISH, TRASH, GARBAGE, AND LITTER SHALL BE PLACED IN SEALED CONTAINERS THROUGHOUT CONSTRUCTION.

31 20 00 – EARTH MOVING

1. WORK SHALL CONSIST OF STRIPPING AND STORAGE OF TOPSOIL, EXCAVATION, EMBANKMENT, IMPORTING OR EXPORTING MATERIAL TO ACHIEVE LAND BALANCE, COMPACTION, FINISH GRADING, SUBGRADE PREPARATION, AND REPLACEMENT OF TOPSOIL.
2. ALL ITEMS SHALL INCLUDE ALL NECESSARY MATERIALS AND LABOR TO COMPLETE THE ITEM IN PLACE.
3. ALL EARTHWORK SHALL BE IN ACCORDANCE WITH THE RECOMMENDATIONS OF THE GEOTECHNICAL REPORT AND SUBSEQUENT RECOMMENDATIONS OF THE GEOTECHNICAL ENGINEER DURING CONSTRUCTION BASED ON FIELD CONDITIONS, AND THESE REQUIREMENTS. THE RECOMMENDATIONS OF THE GEOTECHNICAL ENGINEER SHALL GOVERN.
4. EXCAVATE TO SUBGRADE REGARDLESS OF THE CHARACTER OF SURFACE AND SUBSURFACE CONDITIONS ENCOUNTERED. EXCAVATED MATERIAL MAY INCLUDE ROCK AND UNCLASSIFIED OBSTRUCTIONS, WHICH IS CONSIDERED INCIDENTAL AND SHALL BE INCLUDED IN THE WORK.
5. EXISTING FOUNDATIONS, BUILDING REMNANTS, AND UNSATISFACTORY MATERIAL SHALL BE COMPLETELY REMOVED FROM WITHIN AND A MINIMUM OF 10 FEET BEYOND BUILDING PAD AREAS. ANY RELATED EXCAVATION SHALL BE BACKFILLED WITH COMPACTED ENGINEERED FILL MATERIAL.
6. EXISTING FOUNDATIONS, BUILDING REMNANTS, AND UNSATISFACTORY MATERIAL SHALL BE REMOVED TO A MINIMUM OF 2 FEET BELOW PROPOSED SUBGRADE WITHIN GREENSPACE AND PAVEMENT AREAS. ANY RELATED EXCAVATION SHALL BE BACKFILLED WITH COMPACTED ENGINEERED FILL MATERIAL.
7. AREAS SHALL BE GRADED TO WITHIN 1 INCH, MORE OR LESS, OF PROPOSED SUBGRADE. DEVIATIONS SHALL NOT BE CONSISTENT IN ONE DIRECTION.
8. DISKING, HARROWING, AND AERATION TECHNIQUES SHALL BE USED TO DRY SUBGRADE PRIOR TO PROOF ROLLING.
9. IN THE PRESENCE OF THE GEOTECHNICAL ENGINEER, PROOF ROLL SUBGRADE BELOW BUILDING PAD AND PAVEMENT AREAS DURING DRY WEATHER WITH A FULLY LOADED TANDEM AXLE DUMP TRUCK WHERE COHESIVE SOILS ARE PREDOMINANT, AND WITH A SMOOTH DRUMMED VIBRATORY ROLLER WHERE GRANULAR SOILS ARE PREDOMINANT. SUBGRADE WHICH IS OBSERVED TO RUT OR DEFLECT EXCESSIVELY SHALL BE UNDERCUT IN ACCORDANCE WITH RECOMMENDATIONS OF THE GEOTECHNICAL ENGINEER. DO NOT PROOF ROLL WET OR SATURATED SUBGRADE.
10. THE CONTRACTOR SHALL MAINTAIN POSITIVE SITE DRAINAGE THROUGHOUT CONSTRUCTION. THIS MAY INCLUDE EXCAVATION OF TEMPORARY DITCHES OR PUMPING TO ALLEVIATE WATER PONDING. SURFACE WATER AND GROUNDWATER SHALL BE PREVENTED FROM ENTERING EXCAVATIONS, PONDING ON PREPARED SUBGRADES, AND FLOODING PROJECT SITE AND/OR SURROUNDING AREAS.
11. THE CONTRACTOR SHALL ASSUME SOLE RESPONSIBILITY FOR ALL EARTHWORK COMPUTATIONS AND FOR ACTUAL LAND BALANCE, INCLUDING UTILITY TRENCH SPOIL. THE CONTRACTOR SHALL IMPORT OR EXPORT MATERIAL AS NECESSARY TO COMPLETE THE PROJECT.
12. TOPSOIL REPLACEMENT DEPTH SHALL BE AS CALLED OUT ON THE CIVIL OR LANDSCAPE PLANS, OR A MINIMUM OF SIX INCHES IF NOT CALLED OUT ON LANDSCAPE PLAN.
13. TOPSOIL IN PARKING ISLANDS: ALL PARKING LOT ISLANDS TO BE BACKFILLED WITH TOPSOIL TO A MINIMUM DEPTH OF 18" BY GRADING CONTRACTOR TO INSURE LONG TERM PLANT HEALTH. CROWN ALL PLANTING ISLANDS A MINIMUM OF 6" TO PROVIDE PROPER DRAINAGE, UNLESS OTHERWISE SPECIFIED.

31 25 00 – EROSION & SEDIMENTATION CONTROLS

1. WORK SHALL CONSIST OF INSTALLATION OF TEMPORARY AND PERMANENT PRACTICES FOR SEDIMENTATION CONTROL, EROSION CONTROL, SLOPE PROTECTION, AND REMOVAL OF PRACTICES UPON FINAL SITE STABILIZATION.
2. ALL ITEMS SHALL INCLUDE ALL NECESSARY MATERIALS AND LABOR TO COMPLETE THE ITEM IN PLACE.
3. INSTALLATION AND MAINTENANCE OF PRACTICES SHALL BE IN ACCORDANCE WITH THE APPLICABLE WDNR TECHNICAL STANDARD, OR THE WISCONSIN CONSTRUCTION SITE BEST MANAGEMENT PRACTICE HANDBOOK IF A TECHNICAL STANDARD IS NOT AVAILABLE.
4. ALL PRACTICES SHALL BE INSTALLED PRIOR TO COMMENCING ANY LAND DISTURBING CONSTRUCTION RELATED ACTIVITY. EARTHWORK ASSOCIATED WITH INSTALLATION OF PRACTICES MAY OCCUR CONCURRENTLY.
5. ALL PRACTICES SHALL BE MAINTAINED THROUGHOUT THE DURATION OF THE PROJECT AND WARRANTY PERIOD IN CONFORMANCE WITH PERMIT REQUIREMENTS.
6. ALL PRACTICES SHALL BE ROUTINELY INSPECTED EVERY 7 DAYS AND WITHIN 24 HOURS OF A RAINFALL GREATER THAN 0.5 INCHES. THE CONTRACTOR IS REQUIRED TO PERFORM INSPECTIONS, KEEP A LOG, AND CONDUCT REPAIRS AS NEEDED.
7. ALL DISTURBED AREAS SHALL DRAIN TO A CONTROL PRACTICE AT ALL TIMES DURING CONSTRUCTION UNTIL FINAL STABILIZATION IS ACHIEVED. DEPENDING UPON HOW THE CONTRACTOR GRADES THE SITE, IT MAY BE NECESSARY TO INSTALL ADDITIONAL CONTROL PRACTICES IN VARIOUS LOCATIONS THROUGHOUT THE PROJECT SITE. THE CONTRACTOR IS RESPONSIBLE FOR INSTALLATION OF ANY ADDITIONAL CONTROL PRACTICES NECESSARY TO PREVENT EROSION AND SEDIMENTATION.
8. ALL DISTURBED GROUND LEFT INACTIVE FOR 7 DAYS SHALL BE STABILIZED WITH A TEMPORARY SEED MIXTURE AND MULCH. THE TEMPORARY SEED MIXTURE SHALL BE IN ACCORDANCE WITH SECTION 630 OF WISDOT STANDARD SPECIFICATIONS. WINTER WHEAT OR RYE SHALL BE USED FOR TEMPORARY SEED AFTER SEPTEMBER 1.
9. DISTURBED AREAS THAT CAN NOT BE STABILIZED WITH A DENSE GROWTH OF VEGETATION DUE TO TEMPERATURE OR TIMING OF CONSTRUCTION SHALL BE STABILIZED BY APPLYING ANIONIC POLYACRYLAMIDE (PAM).
10. ALL ACTIVITIES ON THE PROJECT SITE SHALL BE CONDUCTED IN A LOGICAL SEQUENCE TO MINIMIZE THE AREA OF BARE SOIL EXPOSED AT ANY ONE TIME.
11. DUST GENERATED BY CONSTRUCTION RELATED ACTIVITIES SHALL BE MINIMIZED BY USE OF WATERING, CALCIUM CHLORIDE SURFACE TREATMENT, CONSTRUCTION SCHEDULING, OR OTHER APPROPRIATE MEASURES.
12. THE CONTRACTOR SHALL BE PREPARED FOR DEWATERING CONDITIONS BY HAVING APPROPRIATE PUMPS AND FILTER BAGS ONSITE. ALL WATER FROM CONSTRUCTION DEWATERING SHALL BE TREATED PRIOR TO DISCHARGE FROM THE PROJECT SITE.
13. THE CONTRACTOR SHALL BE RESPONSIBLE FOR MAINTAINING THE CLEANLINESS OF THE PROJECT SITE AND PUBLIC ROADS DURING CONSTRUCTION. PUBLIC ROADS SHALL BE KEPT FREE OF SEDIMENT TRACKED FROM AREAS UNDER CONSTRUCTION BY DAILY SWEEPING OR OTHER APPROPRIATE MEASURES.
14. FINAL STABILIZATION OF LANDSCAPED AREAS SHALL BE IN ACCORDANCE WITH THE APPROVED LANDSCAPE PLAN.
15. ALL SEEDED AREAS SHALL BE FERTILIZED, RESEEDED AS NECESSARY, AND MULCHED IN ACCORDANCE WITH THE APPROVED LANDSCAPE PLAN TO MAINTAIN A VIGOROUS DENSE VEGETATIVE COVER.

DIVISION 32 – EXTERIOR IMPROVEMENTS

32 12 00 – ASPHALT PAVING

1. WORK SHALL CONSIST OF FINE GRADING SUBGRADE, EXCAVATION BELOW SUBGRADE (IF NECESSARY), PLACEMENT OF CRUSHED STONE BASE, INSTALLATION OF HOT–MIX ASPHALT, PAVEMENT MARKING, SIGNAGE, AND CLEANUP.
2. ALL ITEMS SHALL INCLUDE ALL NECESSARY MATERIALS AND LABOR TO COMPLETE THE ITEM IN PLACE.
3. ASPHALT PAVEMENT MIX DESIGNS SUBMITTED FOR REVIEW SHALL BE FORMATTED USING WISDOT MIX DESIGN STANDARD DATA INPUT FORM/REPORT 249.
4. CRUSHED STONE BASE SHALL BE IN ACCORDANCE WITH SECTION 305 OF WISDOT STANDARD SPECIFICATIONS.
5. ASPHALTIC MATERIALS SHALL BE IN ACCORDANCE WITH SECTION 455 OF WISDOT STANDARD SPECIFICATIONS.
6. AGGREGATE SHALL BE IN ACCORDANCE WITH SECTION 460 OF WISDOT STANDARD SPECIFICATIONS.
7. DO NOT CONDUCT ASPHALT PAVING IF ANY OF THE FOLLOWING CONDITIONS EXIST: CRUSHED STONE BASE IS WET OR EXCESSIVELY DAMP; TEMPERATURE IS BELOW 30 DEGREES FAHRENHEIT AT TIME OF BINDER COURSE INSTALLATION; TEMPERATURE HAS BEEN BELOW 35 DEGREES FAHRENHEIT WITHIN 12 HOURS PRIOR TO TACK COAT APPLICATION; TEMPERATURE IS BELOW 40 DEGREES FAHRENHEIT AT TIME OF SURFACE COURSE INSTALLATION.
8. COMPACT ASPHALT IN ACCORDANCE WITH SECTION 450 OF WISDOT STANDARD SPECIFICATIONS. COMPACT ASPHALT TO PRODUCE THE THICKNESS INDICATED WITHIN PLUS/MINUS 1/4–INCH FOR BINDER COURSE, AND WITHIN PLUS 1/4–INCH FOR SURFACE COURSE (NO MINUS).
9. APPLY TACK COAT BETWEEN ASPHALT COURSES AT A MINIMUM RATE OF 0.25 GAL/SY.
10. NO TRAFFIC SHALL BE ALLOWED ON ASPHALT AFTER FINAL ROLLING UNTIL IT HAS COOLED AND HARDENED.
11. FINAL ASPHALT SURFACE SHALL BE WITHIN A 1/8–INCH TOLERANCE AS DETERMINED BY USING A 10–FOOT STRAIGHTEDGE APPLIED LONGITUDINALLY OR TRANSVERSELY. REMOVE AND REPLACE ALL RAISED AND DEPRESSED AREAS EXCEEDING TOLERANCE.
12. A SLOPE NO GREATER THAN 2% IN ALL DIRECTIONS AT ADA PARKING STALLS AND ADJACENT UNLOADING AREAS IS REQUIRED. NOTIFY ENGINEER OF ANY DISCREPANCIES PRIOR TO COMMENCING WORK.
13. A SLOPE NO GREATER THAN 5% ALONG THE LENGTH OF THE ACCESSIBLE ROUTE IS REQUIRED. A SLOPE NO GREATER THAN 2% ACROSS THE WIDTH OF THE ACCESSIBLE ROUTE IS REQUIRED. NOTIFY ENGINEER OF ANY DISCREPANCIES PRIOR TO COMMENCING WORK.

32 13 00 – CONCRETE PAVING

1. WORK SHALL CONSIST OF FINE GRADING SUBGRADE, EXCAVATION BELOW SUBGRADE (IF NECESSARY), PLACEMENT OF CRUSHED STONE BASE, INSTALLATION OF CONCRETE, AND CLEANUP.
2. ALL ITEMS SHALL INCLUDE ALL NECESSARY MATERIALS AND LABOR TO COMPLETE THE ITEM IN PLACE.
3. CRUSHED STONE BASE SHALL BE IN ACCORDANCE WITH SECTION 305 OF WISDOT STANDARD SPECIFICATIONS.
4. CONCRETE PAVING SHALL BE IN ACCORDANCE WITH WISDOT STANDARD SPECIFICATIONS:
   a. SECTION 405– COLORED AND STAMPED CONCRETE PAVING
   b. SECTION 415– CONCRETE PAVEMENT
   c. SECTION 416– CONCRETE PAVEMENT REPAIR
   d. SECTION 601– CONCRETE CURBING
   e. SECTION 602– CONCRETE SIDEWALK AND PATIO PAVING
5. CONCRETE SHALL BE GRADE A AIR–ENTRAINED IN ACCORDANCE WITH SECTION 501 OF WISDOT STANDARD SPECIFICATIONS, WITH A MINIMUM 28 DAY COMPRESSIVE STRENGTH OF 4,000 PSI.
6. AGGREGATE SHALL BE IN ACCORDANCE WITH SECTION 501 OF WISDOT STANDARD SPECIFICATIONS.
7. WATER SHALL BE IN ACCORDANCE WITH SECTION 501 OF WISDOT STANDARD SPECIFICATIONS AND ASTM C94 / C94M.
8. AIR–ENTRAINING SHALL BE IN ACCORDANCE WITH SECTION 501 OF WISDOT STANDARD SPECIFICATIONS AND ASTM C260.

DIVISION 32 – EXTERIOR IMPROVEMENTS

9. RETARDING, WATER–REDUCING, AND NON–CHLORIDE ACCELERATING ADMIXTURES SHALL BE IN ACCORDANCE WITH SECTION 501 OF WISDOT STANDARD SPECIFICATIONS AND AASHTO M194.
10. LIQUID CURING COMPOUND SHALL BE IN ACCORDANCE WITH SECTION 415 OF WISDOT STANDARD SPECIFICATIONS AND AASHTO M 148.
11. CONCRETE FORMS SHALL REMAIN IN PLACE AT LEAST 24 HOURS AFTER CONCRETE INSTALLATION AND SHALL BE CLEANED AFTER EACH USE. CONCRETE FORMS SHALL BE COATED WITH RELEASE AGENT TO ALLOW SEPARATION WITHOUT DAMAGE TO CONCRETE.
12. CONSTRUCTION AND CONTRACTION JOINTS SHALL BE IN ACCORDANCE WITH SECTION 415 OF WISDOT STANDARD SPECIFICATIONS. JOINT PATTERN SHALL FOLLOW ARCHITECTURAL PLANS IF AVAILABLE.
13. ISOLATION JOINTS SHALL CONSIST OF PREFORMED JOINT FILLER STRIPS ABUTTING CURBING, INLETS, CATCH BASINS, MANHOLES, STRUCTURES, AND OTHER FIXED OBJECTS.
14. EDGES OF CONCRETE PAVEMENT, CURBING, SIDEWALK, PATIOS, AND JOINTS SHALL BE TOOLED IN CONCRETE AFTER INITIAL FLOATING WITH AN EDGING TOOL TO A 1/4–INCH RADIUS. REPEAT TOOLING AFTER APPLYING SURFACE FINISHES AND ELIMINATE TOOL MARKS ON SURFACES.
15. FINISH, CURE, AND PROTECT CURBING IN ACCORDANCE WITH SECTION 601 OF WISDOT STANDARD SPECIFICATIONS.
16. FINISH (LIGHT BROOM), CURE, AND PROTECT SIDEWALK AND PATIOS IN ACCORDANCE WITH SECTION 602 OF WISDOT STANDARD SPECIFICATIONS.
17. FINISH (ARTIFICIAL TURF DRAG), CURE, AND PROTECT VEHICULAR PAVEMENT AND PADS IN ACCORDANCE WITH SECTION 415 OF WISDOT STANDARD SPECIFICATIONS.
18. MAINTAIN CONCRETE FREE OF STAINS, DISCOLORATION, DIRT, AND OTHER FOREIGN MATERIAL. SWEEP CONCRETE PRIOR TO SUBSTANTIAL COMPLETION INSPECTION.
19. MAXIMUM DIFFERENCE BETWEEN CONCRETE SIDEWALKS AND ADJACENT PAVEMENT SURFACES SHALL NOT EXCEED 1/4–INCH VERTICAL.
20. A SLOPE NO GREATER THAN 2% IN ALL DIRECTIONS AT ADA PARKING STALLS AND ADJACENT UNLOADING AREAS IS REQUIRED. NOTIFY ENGINEER OF ANY DISCREPANCIES PRIOR TO COMMENCING WORK.
21. A SLOPE NO GREATER THAN 5% ALONG THE LENGTH OF THE ACCESSIBLE ROUTE IS REQUIRED. A SLOPE NO GREATER THAN 2% ACROSS THE WIDTH OF THE ACCESSIBLE ROUTE IS REQUIRED. NOTIFY ENGINEER OF ANY DISCREPANCIES PRIOR TO COMMENCING WORK.
22. ALL ACCESSIBLE DOORWAYS REQUIRE AN EXTERIOR LANDING THAT IS A MINIMUM OF 5 FEET BY 5 FEET WITH A SLOPE NO GREATER THAN 2% IN ALL DIRECTIONS. NOTIFY ENGINEER OF ANY DISCREPANCIES PRIOR TO COMMENCING WORK.
23. REMOVE AND REPLACE CONCRETE THAT IS BROKEN, DAMAGED, DEFECTIVE, OR DOES NOT COMPLY WITH THE REQUIREMENTS LISTED ABOVE.

32 17 00 – PAVEMENT MARKING

1. WORK SHALL CONSIST OF INSTALLATION OF PARKING LOT STRIPING, DIRECTIONAL ARROWS, AND ACCESSIBLE SYMBOLS.
2. ALL ITEMS SHALL INCLUDE ALL NECESSARY MATERIALS AND LABOR TO COMPLETE THE ITEM IN PLACE.
3. PAVEMENT MARKING SHALL BE IN ACCORDANCE WITH SECTION 646 OF WISDOT STANDARD SPECIFICATIONS AND WISDOT APPROVED PRODUCTS LIST. COLOR SHALL BE WHITE UNLESS NOTED OTHERWISE ON THIS PLAN. MARKINGS SEPARATING OPPOSING TRAFFIC SHALL BE YELLOW.
4. ALL PARKING LOT STRIPING SHALL BE 4–INCH WIDTH UNLESS NOTED OTHERWISE ON THIS PLAN.
5. BARRICADE WORK AREA DURING INSTALLATION AND UNTIL PAVEMENT MARKING IS DRIED. PROTECT ADJACENT AREAS FROM RECEIVING PAINT OR EPOXY.
6. APPLY PAVEMENT MARKING IN ACCORDANCE WITH MANUFACTURER SPECIFICATIONS TO PRODUCE MARKINGS AS INDICATED WITH UNIFORM, STRAIGHT EDGES. TEMPLATES SHALL BE PROFESSIONALLY MADE TO INDUSTRY STANDARDS.
7. APPLY PAVEMENT MARKING TO CLEAN AND DRY SURFACE, FREE FROM FROST, TO ENSURE PROPER BONDING.
8. NOTIFY OWNER OF ANY UNSOUND CONDITIONS PRIOR TO COMMENCING WORK. APPLYING PAVEMENT MARKING CONSTITUTES CONTRACTOR'S ACCEPTANCE OF SURFACE AS SUITABLE FOR INSTALLATION.

32 32 00 – RETAINING WALLS

1. WORK SHALL CONSIST OF FURNISHING DETAILED DESIGN, MATERIALS, LABOR, EQUIPMENT, SUPERVISION, AND DIRECTION TO CONSTRUCT RETAINING WALL SYSTEMS IN REASONABLY CLOSE CONFORMITY TO THE LINES, GRADES, AND DIMENSIONS SHOWN ON THIS PLAN. RETAINING WALLS SHOWN ON THIS PLAN ARE FOR GENERAL LOCATION AND MATERIAL REFERENCE ONLY.
2. ALL ITEMS SHALL INCLUDE ALL NECESSARY MATERIALS AND LABOR TO COMPLETE THE ITEM IN PLACE.
3. THE CONTRACTOR SHALL PROCURE DETAILED DESIGN CALCULATIONS AND DRAWINGS, PREPARED AND SEALED BY A PROFESSIONAL ENGINEER EXPERIENCED WITH RETAINING WALL DESIGN AND LICENSED IN THE STATE IN WHICH THE RETAINING WALLS ARE TO BE CONSTRUCTED.
4. THE CONTRACTOR IS RESPONSIBLE FOR ENSURING THAT ALL SURROUNDING STRUCTURES AND UTILITIES ARE PROTECTED FROM THE EFFECTS OF EXCAVATION AND PROVIDING ANY NECESSARY EXCAVATION SUPPORT.
5. THE CONTRACTOR IS RESPONSIBLE FOR ENSURING THAT CONSTRUCTION ADJACENT TO THE RETAINING WALLS DOES NOT DISTURB OR PLACE TEMPORARY LOADS ON THE RETAINING WALLS THAT EXCEED DESIGN LOADS.

DIVISION 33 – UTILITIES

33 10 00 – WATER DISTRIBUTION

1. WORK SHALL CONSIST OF INSTALLATION AND TESTING OF THE WATER DISTRIBUTION SYSTEM AND ALL APPURTENANCES.
2. ALL ITEMS SHALL INCLUDE ALL NECESSARY MATERIALS AND LABOR TO COMPLETE THE ITEM IN PLACE.
3. ALL PUBLIC WATER DISTRIBUTION WORK SHALL BE IN ACCORDANCE WITH WISCONSIN ADMINISTRATIVE CODE NR 811, MUNICIPALITY DEVELOPMENT STANDARDS AND SSSWCW.
4. ALL PRIVATE WATER DISTRIBUTION WORK SHALL BE IN ACCORDANCE WITH WISCONSIN ADMINISTRATIVE CODE SPS 382, MUNICIPALITY DEVELOPMENT STANDARDS AND SSSWCW.
5. POLYVINYL CHLORIDE (PVC) PIPE SHALL BE SDR 18, CLASS 150 CONFORMING TO AWWA C900 WITH INTEGRAL ELASTOMERIC BELL AND SPIGOT JOINTS IN ACCORDANCE WITH SECTION 8.20.0 OF SSSWCW.
6. DUCTILE IRON PIPE (DIP) SHALL BE CLASS 150 CONFORMING TO AWWA C151 WITH RUBBER GASKETED JOINTS IN ACCORDANCE WITH SECTION 8.18.0 OF SSSWCW.
7. POLYETHYLENE TUBING SHALL BE SDR 9 IN ACCORDANCE WITH SECTION 8.24.0 OF SSSWCW AND CONFORM TO AWWA C901.
8. COPPER TUBING SHALL BE TYPE "K" IN ACCORDANCE WITH SECTION 8.24.0 OF SSSWCW AND CONFORM TO ASTM B88.
9. BALL VALVES SHALL BE IN ACCORDANCE WITH SECTION 8.30.0 OF SSSWCW AND CONFORM TO AWWA C800 AND ASTM B62.
10. GATE VALVES SHALL BE IN ACCORDANCE WITH SECTION 8.27.0 OF SSSWCW AND CONFORM TO AWWA C500.
11. BUTTERFLY VALVES SHALL BE IN ACCORDANCE WITH SECTION 8.28.0 OF SSSWCW AND CONFORM TO AWWA C504.
12. VALVE BOXES SHALL BE IN ACCORDANCE WITH SECTION 8.29.0 OF SSSWCW AND CONFORM TO ASTM A48. VALVE BOXES SHALL BE SIZE DD, SCREW TYPE, 3 PIECE ASSEMBLY, WITH COVERS MARKED "WATER". ALL VALVE BOXES SHALL BE SET TO PROPOSED GRADE, TRULY VERTICAL, AND SUPPORTED BY USE OF ADAPTOR.
13. HYDRANTS SHALL BE IN ACCORDANCE WITH SECTION 8.26.0 OF SSSWCW AND CONFORM TO AWWA C502. PUMPER NOZZLE SHALL BE PERPENDICULAR TO AND ORIENTED TOWARDS THE PAVEMENT. HYDRANTS SHALL BE ATTACHED BY MEANS OF TEE AND HAVE A GROUND LINE TO CENTER DISTANCE OF 18 TO 21 INCHES.
14. FITTINGS SHALL BE CLASS 150 IN ACCORDANCE WITH SECTION 8.22.0 OF SSSWCW, CONFORMING TO AWWA C110, AND PROVIDED WITH MECHANICAL JOINTS.
15. MECHANICAL JOINTS SHALL BE MADE WITH "COR TEN" NUTS AND BOLTS, OR CORROSION–RESISTANT EQUIVALENTS CONFORMING TO AWWA C111.
16. POLYETHYLENE WRAP SHALL BE IN ACCORDANCE WITH SECTION 8.21.0 OF SSSWCW AND PROVIDED FOR ALL METAL PIPES AND FITTINGS.
17. THRUST RESTRAINT SHALL BE IN ACCORDANCE WITH SECTION 4.3.13 OF SSSWCW AND PROVIDED FOR ALL BENDS, CAPS, PLUGS, AND TEES.
18. TRENCH SECTION SHALL BE IN ACCORDANCE WITH FILE NO. 36 OF SSSWCW. MAXIMUM ALLOWABLE TRENCH WIDTH SHALL BE OUTSIDE DIAMETER OF PIPE PLUS 20 INCHES.
19. PIPE BEDDING AND COVER MATERIAL SHALL BE IN ACCORDANCE WITH SECTION 8.43.0 OF SSSWCW. MINIMUM COVER OVER PIPE SHALL BE 12 INCHES.
20. TRENCH BACKFILL MATERIAL SHALL BE MECHANICALLY COMPACTED GRANULAR BACKFILL IN ACCORDANCE WITH SECTION 8.43.4 OF SSSWCW BENEATH AND WITHIN 5 FEET OF PAVEMENT AREAS, AND SHALL BE SPOIL BACKFILL IN ACCORDANCE WITH SECTION 8.43.5 OF SSSWCW BENEATH GREENSPACE AREAS, UNLESS ALTERNATIVE COMPACTION IS RECOMMENDED IN THE GEOTECHNICAL REPORT OR BY THE GEOTECHNICAL ENGINEER DURING CONSTRUCTION, IN WHICH CASE THE CONTRACTOR IS TO FOLLOW THE RECOMMENDATIONS OF THE GEOTECHNICAL ENGINEER.
21. CAUTION MUST BE FOLLOWED REGARDING THE COMPACTION OF ALL UTILITY TRENCHES. FLOODING OF BACKFILL MATERIAL IS NOT ALLOWED.
22. TRACER WIRE SHALL BE BLUE AND INSTALLED IN ACCORDANCE WITH SECTION 2.11.2 OF SSSWCW ON ALL BURIED NON–METALLIC PUBLIC WATER MAIN PIPE, PRIVATE WATER MAIN PIPE, AND BUILDING WATER SERVICE PIPE. TRACER WIRE SHALL BE INSULATED, SINGLE–CONDUCTOR, 12 GAUGE SOLID COPPER OR COPPER COATED STEEL WIRE, SECURED AT LEAST EVERY 10 FEET AND AT ALL BENDS, WITH ACCESS POINTS AT LEAST EVERY 400 FEET.
23. PROPOSED WATER SERVICES SHOWN ON THIS PLAN SHALL TERMINATE AT A POINT FIVE (5) FEET FROM THE EXTERIOR BUILDING WALL.
24. THE CONTRACTOR IS RESPONSIBLE FOR THE SIZE, TYPE AND NUMBER OF BENDS REQUIRED TO COMPLETE CONSTRUCTION, WHICH SHALL BE INCIDENTAL AND INCLUDED IN THE COST OF WORK.
25. THE CONTRACTOR SHALL ADJUST ALL VALVE BOXES TO FINISHED SURFACE.
26. THE CONTRACTOR IS RESPONSIBLE FOR PRESSURE TESTING AND SAFE WATER SAMPLING. HYDROSTATIC TESTING SHALL BE IN ACCORDANCE WITH SECTION 4.15.0 OF SSSWCW. DISINFECTION SHALL BE IN ACCORDANCE WITH SECTION 4.16.0 OF SSSWCW AND CONFORM TO AWWA C651. WATER MAINS SHALL BE FLUSHED AND TESTED IN THE PRESENCE OF THE WATER UTILITY OPERATOR.

Know what's **below.**
Call before you dig.

R.A.SMITH, INC. ASSUMES NO RESPONSIBILITY FOR DAMAGES, LIABILITY OR COSTS RESULTING FROM CHANGES OR ALTERATIONS MADE TO THIS PLAN WITHOUT THE EXPRESSED WRITTEN CONSENT OF R.A.SMITH, INC.

ALL COPYRIGHTS TO THESE DRAWINGS ARE RESERVED. THEY MAY NOT BE COPIED, CHANGED, OR ASSIGNED TO ANY THIRD PARTY IN ANY MANNER WITHOUT OBTAINING THE EXPRESSED WRITTEN PERMISSION OF R.A.SMITH, INC.

DATE	DESCRIPTION

raSmith
CREATIVITY BEYOND ENGINEERING
16745 W. Bluemound Road
Brookfield, WI 53005-5938
(262) 781-1000
rasmith.com
Brookfield, WI | Milwaukee, WI | Appleton, WI | Madison, WI
Cedarburg, WI | Naperville, IL | Irvine, CA

RUSS DARROW KIA WAUKESHA
WAUKESHA, WISCONSIN

SPECIFICATIONS

© COPYRIGHT 2025
R.A. Smith, Inc.

DATE: 1/21/2025
SCALE: ########
JOB NO. 3200102.01
PROJECT MANAGER: RYAN J. LANCOUR, P.E.
DESIGNED BY: CRR
CHECKED BY: RJL

SHEET NUMBER
C600

P:\3200102\3200102.01\Dwg\Sheets\3200102.01 DT01.dwg, SPECS, 1/21/2025 3:23:50 PM, crr

NOTE
REMOVE ALL EXISTING FURNITURE

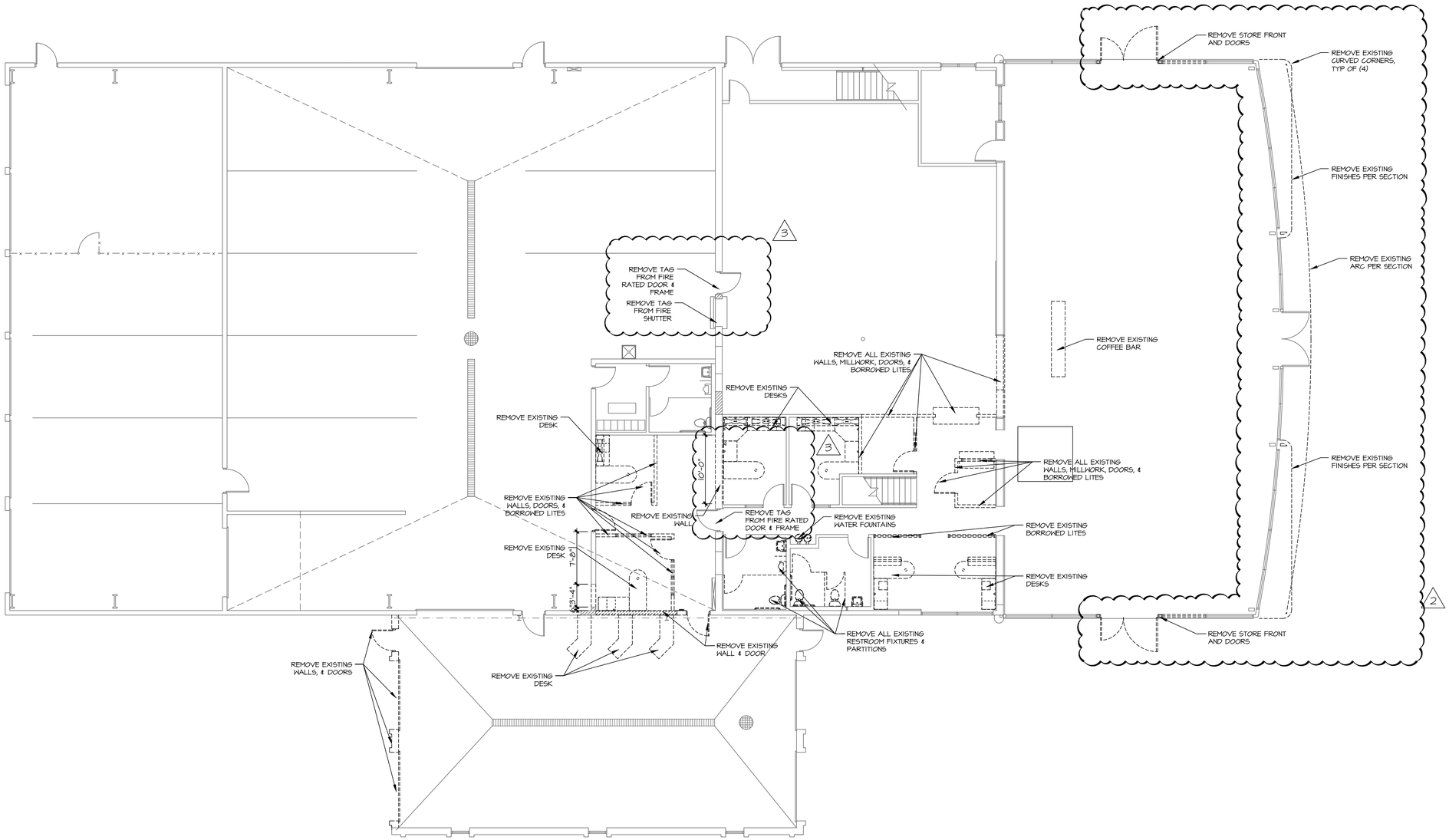

1 DEMO FLOOR PLAN
1/8"=1'-0"

NORTH

TDI ASSOCIATES, INC.
ARCHITECTURE & PLANNING

25217 SOUTH WIND LAKE ROAD
WIND LAKE, WISCONSIN 53185
PHONE 262-409-2530

PROFESSIONAL CONSULTANTS, INC.
300 COTTONWOOD AVE # 7
HARTLAND, WISCONSIN 53029
(262) 367-6080

RUSS DARROW
KIA OF WAUKESHA
2141 EAST MORELAND BLVD
WAUKESHA, WISCONSIN

TDI ASSOCIATES, INC
All Rights Reserved
OWNERSHIP OF DOCUMENTS
This document, and the ideas and design incorporated herein, as an instrument of professional service, is the sole property of TDI Associates, Inc., and is not to be used in whole or in part for any other project or purpose without the expressed written authorization of TDI Associates, Inc.

Sheet Title
DEMO PLAN

Issued For:	Date:
REV #2	06-27-2025
REV #3	08-06-2025

Date:	07-25-2024
Job NO.:	24103.000
Drawn By:	LCC

Sheet No.
AD1.1

NOTE

ALL WALLS ARE EXISTING UNLESS NOTED

DIMENSION NOTES

DIMENSIONS @ EXTERIOR WALLS ARE TO FACE OF SHEATHING FOR STUD WALLS & FACE OF FOUNDATION FOR CMU WALLS UNLESS NOTED

GENERAL NOTES

1. PATCH ALL EXISTING SURFACES TO MATCH WHERE EXISTING WALLS, DOORS & BORROWED LITES WERE REMOVED
2. TENANT TO GET DRINKING WATER FROM SINK OR PROVIDE BOTTLED WATER

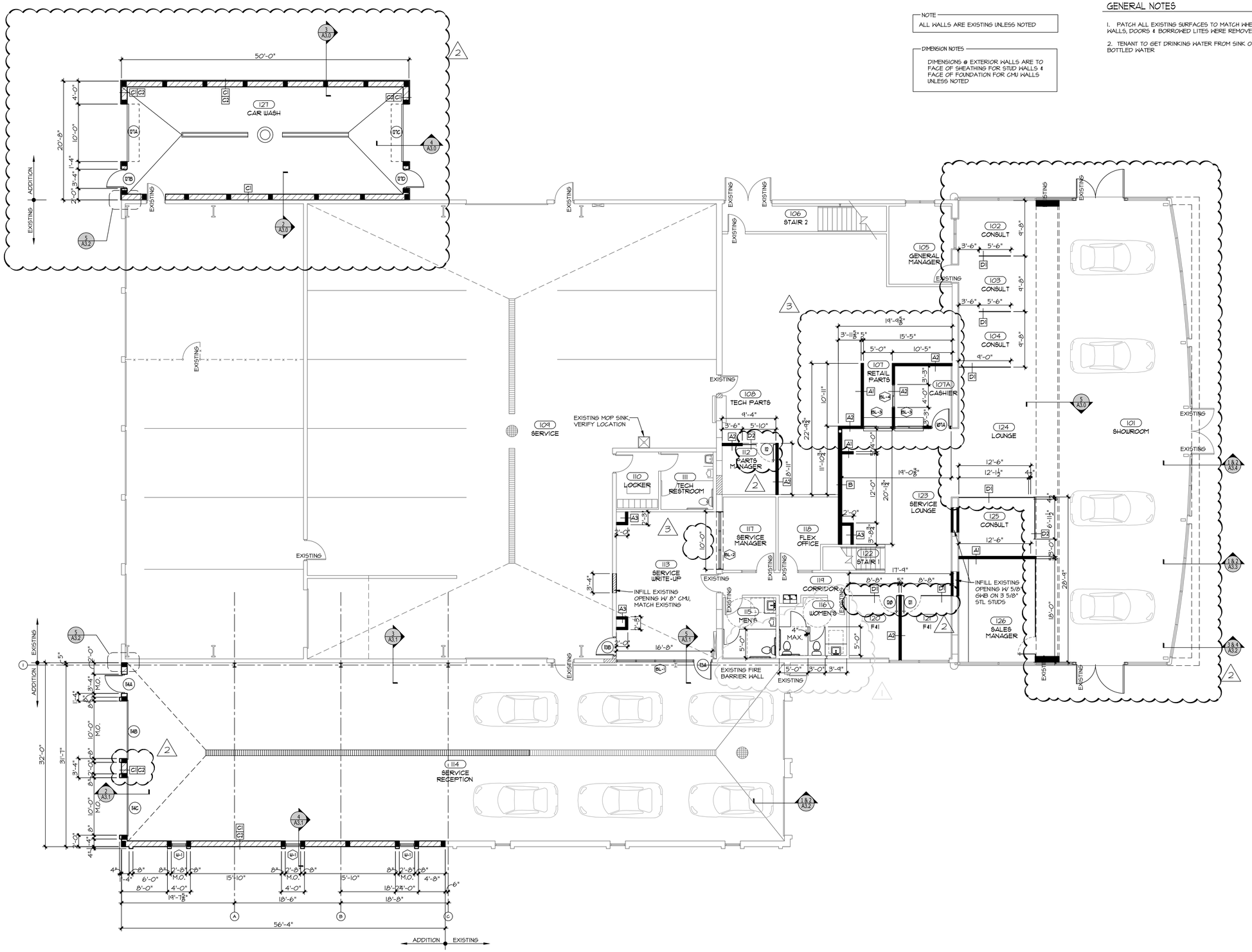

1 FIRST FLOOR PLAN

1/8"=1'-0"

NORTH

TDI ASSOCIATES, INC.
ARCHITECTURE & PLANNING

25217 SOUTH WIND LAKE ROAD
WIND LAKE, WISCONSIN 53185
PHONE 262-409-2530

PROFESSIONAL CONSULTANTS, INC.

300 COTTONWOOD AVE # 7
HARTLAND, WISCONSIN 53029
(262) 367-6080

RUSS DARROW KIA OF WAUKESHA

2141 EAST MORELAND BLVD
WAUKESHA, WISCONSIN

TDI ASSOCIATES, INC
All Rights Reserved

OWNERSHIP OF DOCUMENTS

This document, and the ideas and design incorporated herein, as an instrument of professional service, is the sole property of TDI Associates, Inc., and is not to be used in whole or in part for any other project or purpose without the expressed written authorization of TDI Associates, Inc.

Sheet Title

FIRST FLOOR PLAN

Issued For:	Date:
REV #1	09-03-2024
REV #2	06-27-2025
REV #3	08-06-2025

Date:	07-25-2024
Job NO.:	24103.000
Drawn By:	LCC

Sheet No.

A1.1

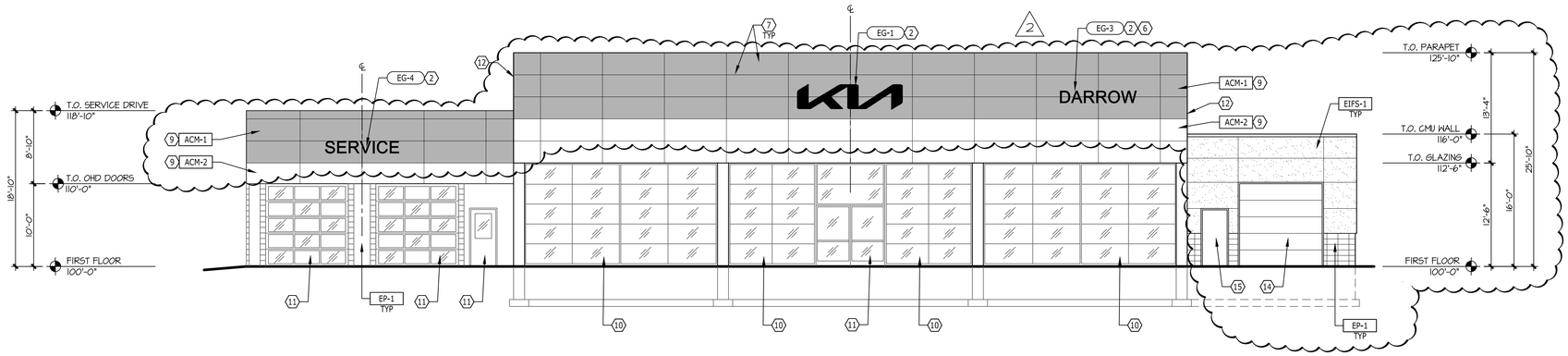

1 NORTH ELEVATION
1/8" = 1'-0"

LEGEND	
#	NOTE DESIGNATOR - REFER TO DRAWING NOTES ON THIS SHEET
EG-X	GRAPHICS DESIGNATOR - REFER TO SHEET G-X
?-#	FINISH DESIGNATOR - REFER TO EXTERIOR FINISH SCHEDULE

DRAWING NOTES

1. NOT USED.
2. BUILDING SIGNAGE. SEE GRAPHICS SHEETS.
3. CENTERLINE OF MULLIONS CURTAIN WALL SYSTEM SHALL BE EQUAL FRAME SPACING AS ALLOWABLE.
4. DISPLAY PLATFORM. SEE DETAILS ON SHEET A.1A.
5. NOT USED.
6. DEALER NAME TO BE ALL UPPERCASE, 2'-0" ALL LETTERS OR 1'-6" LETTER FOR LONGER NAMES.
7. ACM PANEL JOINT, TYP.
8. ENTRY PORTAL PROVIDED BY PATTISON SIGN GROUP. CONTACT BELOW FOR COORDINATION AND REQUIREMENTS.
   CONTACT: STEVIE WEBB swebb@pattisonsign.com
9. ACM PROVIDED AND INSTALLED BY PATTISON SIGN GROUP. NO EXCEPTIONS. CONTACT BELOW FOR COORDINATION AND REQUIREMENTS.
   CONTACT: STEVIE WEBB swebb@pattisonsign.com
   INSTALL OVER EXISTING EIFS / RIGID INSULATION
10. EXISTING GLAZING. ALL EXISTING GLAZING SHALL BE PROVIDED WITH LIKE-NEW APPEARANCE. REPAIR DAMAGED AND DISCOLORED AREAS AS NOTED
11. EXISTING DOOR. ALL EXISTING GLAZING SHALL BE PROVIDED WITH LIKE-NEW APPEARANCE. REPAIR DAMAGED AND DISCOLORED AREAS AS NOTED
12. EXTEND STEEL STUD FRAMING AND SHEATHING TO SQUARE OFF CORNERS.
13. PREFINISHED METAL SCUPPER & DOWN SPOUT, MATCH EXISTING
14. NEW INSULATED SECTIONAL DOOR
15. NEW INSULATED HOLLOW METAL DOOR
16. NEW INSULATED GLASS ALUM. SECIONAL DOOR
17. NEW INSULATED GLASS ALUM. DOOR

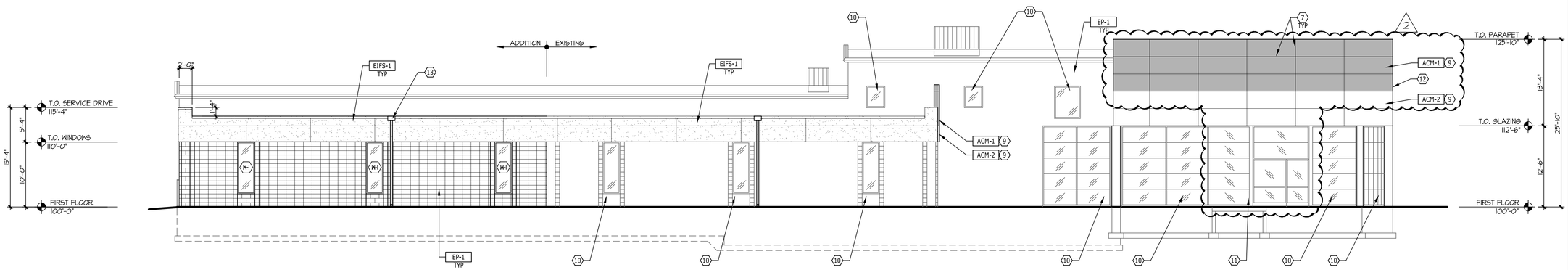

2 EAST ELEVATION
1/8" = 1'-0"

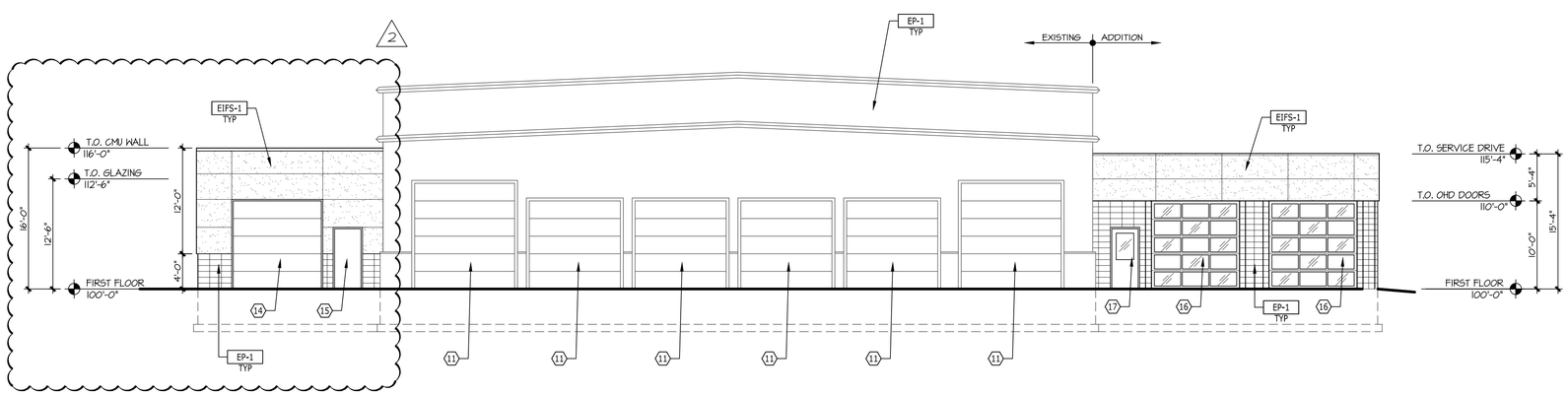

3 SOUTH ELEVATION
1/8" = 1'-0"

TDI ASSOCIATES, INC.
ARCHITECTURE & PLANNING

25217 SOUTH WIND LAKE ROAD
WIND LAKE, WISCONSIN 53185
PHONE 262-409-2530

PROFESSIONAL CONSULTANTS, INC.
300 COTTONWOOD AVE # 7
HARTLAND, WISCONSIN 53029
(262) 367-6080

RUSS DARROW
KIA OF WAUKESHA

2141 EAST MORELAND BLVD
WAUKESHA, WISCONSIN

TDI ASSOCIATES, INC
All Rights Reserved

OWNERSHIP OF DOCUMENTS

This document, and the ideas and design incorporated herein, as an instrument of professional service, is the sole property of TDI Associates, Inc., and is not to be used in whole or in part for any other project or purpose without the expressed written authorization of TDI Associates, Inc.

Sheet Title
ELEVATIONS

Issued For:	Date:
REV #2	06-27-2025

Date:	07-25-2024
Job NO.:	24103.000
Drawn By:	LCC

Sheet No.
A2.1

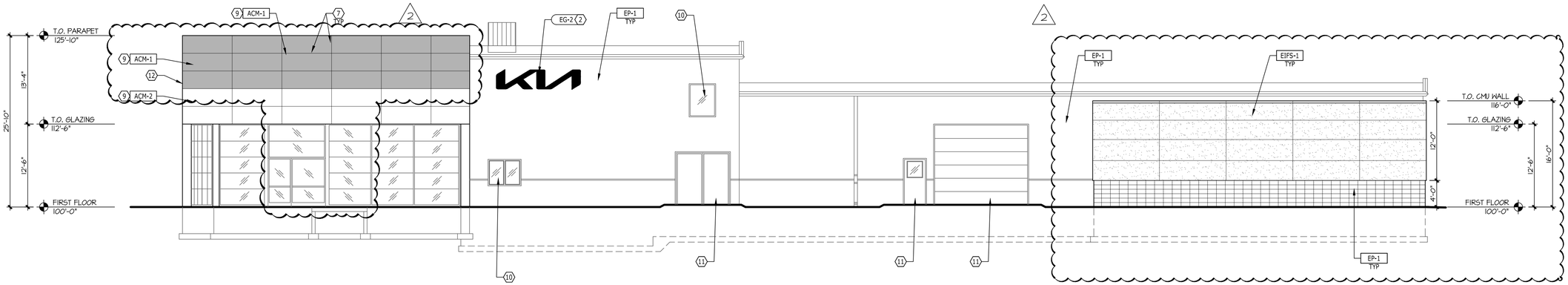

1 WEST ELEVATION

1/8" = 1'-0"

EXTERIOR FINISH SCHEDULE

KIA 2023 CBS EXTERIOR MATERIALS AND FINISHES SCHEDULE

CODE	MATERIAL	NOTES	LOCATION	MANUFACTURER	PRODUCT	FINISH/COLOR	DIMENSION	WEBSITE	MANUFACTURER REPRESENTATIVE CONTACT INFORMATION
ACM-1	ALUMINUM COMPOSITE MATERIAL	CONTRACTOR TO COORDINATE ALL ADDITIONAL PARTS AND SYSTEMS THAT ARE RECOMMENDED BY THE MANUFACTURER TO COMPLETE INSTALL.	EXTERIOR FACADE	PATTISON SIGN GROUP	BESTWORTH	TOB BLACK	REFERENCE CONSTRUCTION DOCUMENTS	https://bestworth.com/acm-architectural-panelwall-series/	COMPANY: PATTISON SIGN GROUP NAME: STEVIE WEBB P: 865-500-4829 M: swebb@pattisonsign.com W: www.pattisonsign.com COMPANY: PATTISON SIGN GROUP NAME: ED MACKLE P: 865-228-4688 M: emackle@pattisonsign.com W: www.pattisonsign.com
ACM-1 (ALT)	ALUMINUM COMPOSITE MATERIAL	CONTRACTOR TO COORDINATE ALL ADDITIONAL PARTS AND SYSTEMS THAT ARE RECOMMENDED BY THE MANUFACTURER TO COMPLETE INSTALL.	EXTERIOR FACADE	ALPOLIC	ALPOLIC / FR	TOB BLACK	REFERENCE CONSTRUCTION DOCUMENTS	https://www.alpolic-americas.com/products/fire-resistant/	COMPANY: ALPOLIC AMERICAS NAME: OCTAVIO DIAZ P: 281-541-4258 M: octavio.diaz@mcgc.com W: www.alpolic-americas.com
ACM-1 (ALT 2)	ALUMINUM COMPOSITE MATERIAL	CONTRACTOR TO COORDINATE ALL ADDITIONAL PARTS AND SYSTEMS THAT ARE RECOMMENDED BY THE MANUFACTURER TO COMPLETE INSTALL.	EXTERIOR FACADE	ALFREX	ALFREX / FR	MIDNIGHT BLACK #ENC-1819	REFERENCE CONSTRUCTION DOCUMENTS	https://www.alfrexusa.com	COMPANY: ALFREX NAME: DAN KERNS P: 470-350-3458 M: dan@alfrexusa.com W: www.alfrex.com
ACM-2	ALUMINUM COMPOSITE MATERIAL	CONTRACTOR TO COORDINATE ALL ADDITIONAL PARTS AND SYSTEMS THAT ARE RECOMMENDED BY THE MANUFACTURER TO COMPLETE INSTALL.	ENTRY PORTAL	PATTISON SIGN GROUP	BESTWORTH	BSX SILVER METALLIC	REFERENCE CONSTRUCTION DOCUMENTS	https://bestworth.com/acm-architectural-panelwall-series/	COMPANY: PATTISON SIGN GROUP NAME: STEVIE WEBB P: 865-500-4829 M: swebb@pattisonsign.com W: www.pattisonsign.com COMPANY: PATTISON SIGN GROUP NAME: ED MACKLE P: 865-228-4688 M: emackle@pattisonsign.com W: www.pattisonsign.com
ACM-2 (ALT)	ALUMINUM COMPOSITE MATERIAL	CONTRACTOR TO COORDINATE ALL ADDITIONAL PARTS AND SYSTEMS THAT ARE RECOMMENDED BY THE MANUFACTURER TO COMPLETE INSTALL.	ENTRY PORTAL	ALPOLIC	ALPOLIC / FR	BSX SILVER METALLIC	REFERENCE CONSTRUCTION DOCUMENTS	https://www.alpolic-americas.com/products/fire-resistant/	COMPANY: ALPOLIC AMERICAS NAME: OCTAVIO DIAZ P: 281-541-4258 M: octavio.diaz@mcgc.com W: www.alpolic-americas.com
ACM-2 (ALT 2)	ALUMINUM COMPOSITE MATERIAL	CONTRACTOR TO COORDINATE ALL ADDITIONAL PARTS AND SYSTEMS THAT ARE RECOMMENDED BY THE MANUFACTURER TO COMPLETE INSTALL.	ENTRY PORTAL	ALFREX	ALFREX / FR	BRIGHT SILVER METALLIC #JY-3510	REFERENCE CONSTRUCTION DOCUMENTS	https://www.alfrexusa.com	COMPANY: ALFREX NAME: DAN KERNS P: 470-350-3458 M: dan@alfrexusa.com W: www.alfrex.com
CW-1	CURTAIN WALL	CONTRACTOR TO COORDINATE ALL ADDITIONAL PARTS AND SYSTEMS THAT ARE RECOMMENDED BY THE MANUFACTURER TO COMPLETE INSTALL.	SHOWROOM	KAWNEER	1620UT CURTAIN WALL SYSTEM GLAZING METHOD: EXTERIOR GLAZING: TO BE DETERMINED BY ARCHITECT OF RECORD. ARCHITECT OF RECORD TO SELECT GLAZING BASED OFF THEIR LOCAL JURISDICTIONS THERMAL REQUIREMENTS.	MULLIONS AND HARDWARE COLOR: ANODIZED ALUMINUM GLAZING: CLEAR; LOW IRON	FACE WIDTH: 2" OVERALL DEPTH: 10"(FACILITY TO VERIFY REQUIREMENTS) GLAZING INFILL: 1" REFERENCE DESIGN DOCUMENTS FOR GLAZING PANEL SIZES.	https://www.kawneer.com	COMPANY: KAWNEER COMPANY NAME:TOM CROSS P:470-233-4472 E:TOM.CROSS@ARCONIC.COM W: WWW.KAWNEER.COM
EIFS-1	EXTERIOR INSULATION FINISH SYSTEM	CONTRACTOR TO COORDINATE ALL ADDITIONAL PARTS AND SYSTEMS THAT ARE RECOMMENDED BY THE MANUFACTURER TO COMPLETE INSTALL.	EXTERIOR OF BUILDING	DRYVIT	DRYVIT "DEMANDIT ADVANTAGE" ARCHITECTURAL COATING KIAM 03 1413 S APPLIED OVER DRYVIT "FINESSE" SPECIALTY FINISH TEXTURE KIAM 03 1036 S INCORPORATING DRYVIT "STRATOTONE" HIGH PERFORMANCE COLORANT (S). SYSTEM REFERENCE: DRYVIT "OUTSULATION PLUS MD" EIFS WITH MOISTURE DRAINAGE	TO MATCH BM HC-169 CONVENTRY GRAY	REFERENCE CONSTRUCTION DOCUMENTS	https://www.drvvit.com/products/coatings-stains/demandit-advantage/	COMPANY: DRYVIT SYSTEMS INC. NAME:BOB DAZEL P:734-276-0404 M:734-790-6765 E:BOB.DAZEL@DRYVIT.COM W: WWW.DRYVIT.COM
EP-1	PAINT	PREP AND PRIME SURFACES PER MANUFACTURER'S RECOMMENDATIONS.	EXTERIOR PAINT	BENJAMIN MOORE	REGAL SELECT EXTERIOR LATEX PAINT	COLOR: BM HC-169 CONVENTRY GRAY FINISH: EGGSHELL	N/A	https://store.benjaminmoore.com/storefront/us/en/coating/exterior-paints/benjamin-moore/regal-select-exterior-paint/regal/p/RSE%20FLAT	COMPANY: BENJAMIN MOORE NAME: DOROTHY HAZINSKI P: 866-708-9181 M: 330-353-3852 E: DOROTHY.HAZINSKI@BENJAMINMOORE.COM W: WWW.BENJAMINMOORE.COM

TDI ASSOCIATES, INC.
ARCHITECTURE & PLANNING

25217 SOUTH WIND LAKE ROAD
WIND LAKE, WISCONSIN 53185
PHONE 262-409-2530

PROFESSIONAL CONSULTANTS, INC.

300 COTTONWOOD AVE # 7
HARTLAND, WISCONSIN 53029
(262) 367-6080

RUSS DARROW
KIA OF WAUKESHA

2141 EAST MORELAND BLVD
WAUKESHA, WISCONSIN

TDI ASSOCIATES, INC
All Rights Reserved

OWNERSHIP OF DOCUMENTS

This document, and the ideas and design incorporated herein, as an instrument of professional service, is the sole property of TDI Associates, Inc., and is not to be used in whole or in part for any other project or purpose without the expressed written authorization of TDI Associates, Inc.

Sheet Title
ELEVATIONS

Issued For: REV #2
Date: 06-27-2025

Date: 07-25-2024
Job NO.: 24103.000
Drawn By: LCC
Sheet No.
A2.2

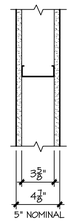

A1 — 5/8" G.W.B. ON BOTH SIDES OF 3 5/8" MTL. STUDS @ 16" o/c. EXTEND STUDS & GWB TO BOTTOM OF DECK ABOVE

A2 — (A1) WITH 3" SOUND BATTS

A3 — (A1) WITH 5/8" GWB ON ONE SIDE OF WALL

TYPE 'A'
FULL HEIGHT WALL (3 5/8" MTL STUD)

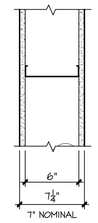

B — 5/8" M.R. GWB ON BOTH SIDES OF 6" MTL. STUDS @ 16" o/c. EXTEND STUDS & GWB TO BOTTOM OF DECK ABOVE

TYPE 'B'
FULL HEIGHT WALL (6" MTL STUD)

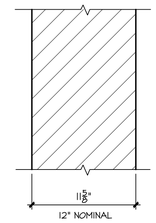

C1 — EIFS WALL SYSTEM W/ 2" POLYISO RIGID INSULATION R-14.6 ON 12" (125 lbs. DENSITY) STANDARD FACE CMU W/ HORIZ. REINFORCING @ 16" O.C. (SEE STRUCTURAL PLAN FOR VERTICAL REINFORCING), FILL CORES W/ FOAM INSULATION MIN. 'U' VALUE = 0.056 (2)

C2 — 12" (125 lbs. DENSITY) STANDARD FACE CMU W/ HORIZ. REINFORCING @ 16" O.C. (SEE STRUCTURAL PLAN FOR VERTICAL REINFORCING), FILL CORES W/ FOAM INSULATION MIN. 'U' VALUE = 0.16

TYPE 'C'
12" CMU WALL

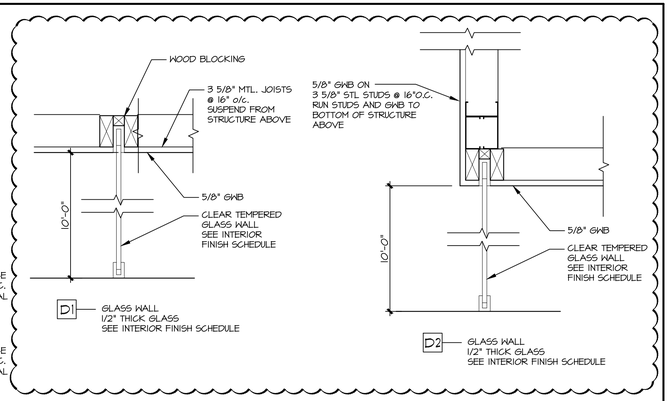

(2)

(1) WALL TYPES

1 1/2" = 1'-0"

(2)

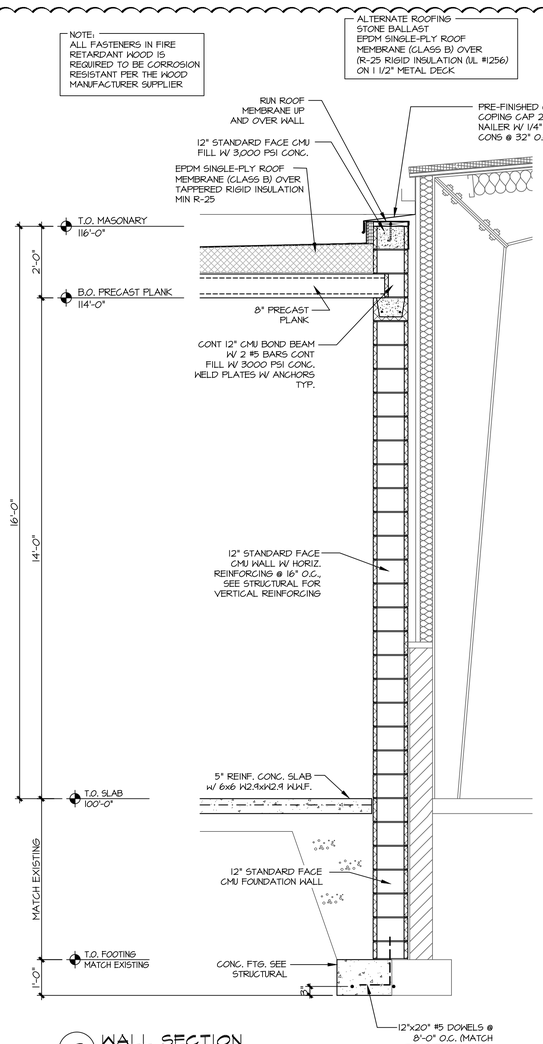

(2) WALL SECTION
1/2" = 1'-0"

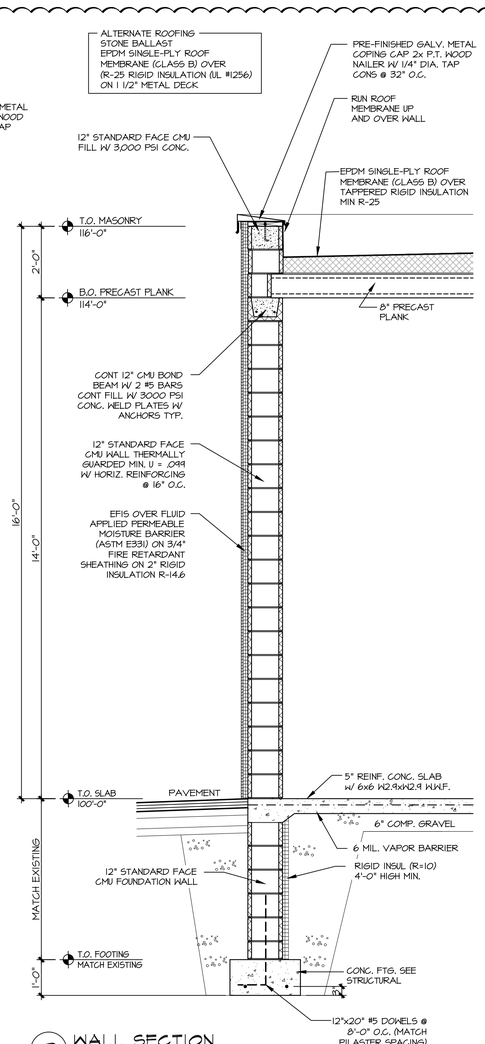

(3) WALL SECTION
1/2" = 1'-0"

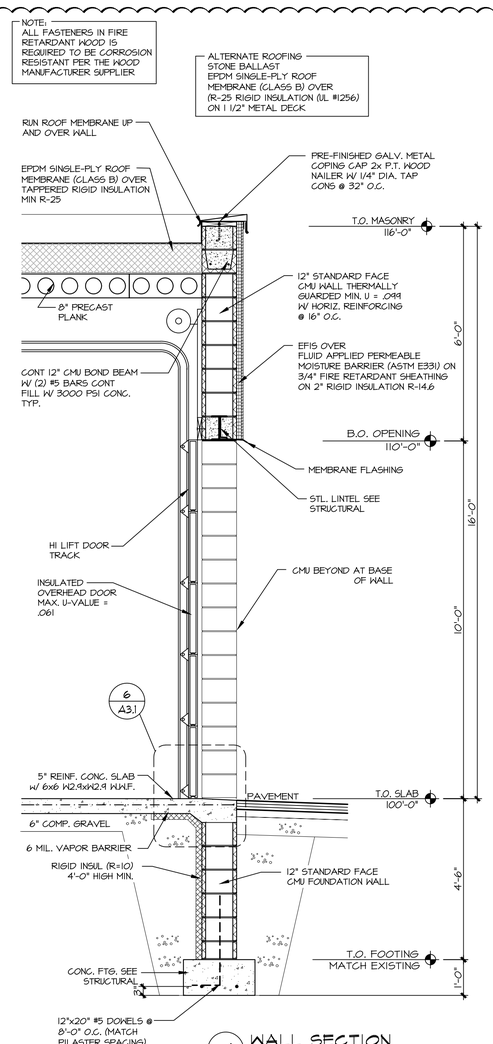

(4) WALL SECTION
1/2" = 1'-0"

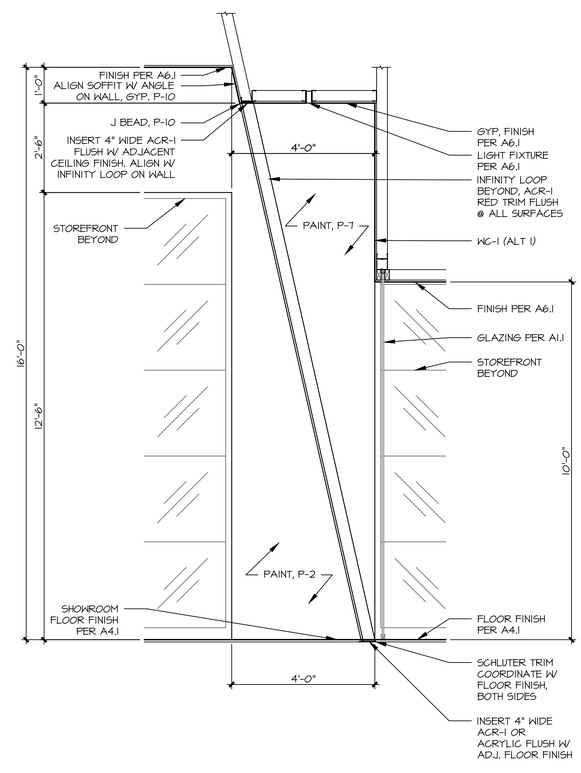

(5) WALL SECTION
1/2" = 1'-0"

TDI ASSOCIATES, INC.
ARCHITECTURE & PLANNING

25217 SOUTH WIND LAKE ROAD
WIND LAKE, WISCONSIN 53185
PHONE 262-409-2530

PROFESSIONAL CONSULTANTS, INC.

300 COTTONWOOD AVE # 7
HARTLAND, WISCONSIN 53029
(262) 367-6080

RUSS DARROW KIA OF WAUKESHA

2141 EAST MORELAND BLVD
WAUKESHA, WISCONSIN

TDI ASSOCIATES, INC
All Rights Reserved

OWNERSHIP OF DOCUMENTS

This document, and the ideas and design incorporated herein, as an instrument of professional service, is the sole property of TDI Associates, Inc., and is not to be used in whole or in part for any other project or purpose without the expressed written authorization of TDI Associates, Inc.

Sheet Title
WALL TYPES & WALL SECTION

Issued For:	Date:
REV #2	06-27-2025

Date:	07-25-2024
Job NO.:	24103.000
Drawn By:	LCC

Sheet No.
A3.0 (2)

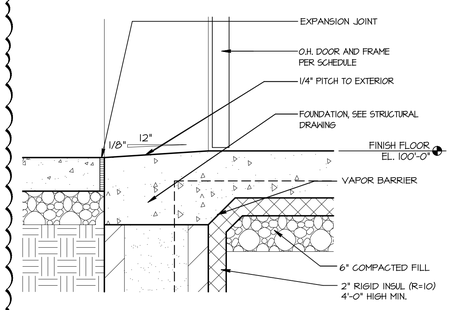

6 OVERHEAD DOOR SILL
1 1/2" = 1'-0"

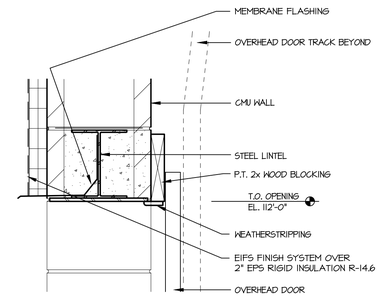

7 OVERHEAD DOOR HEAD
1 1/2" = 1'-0"

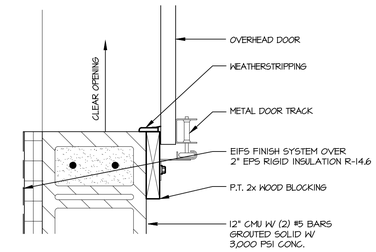

8 OVERHEAD DOOR JAMB
1 1/2" = 1'-0"

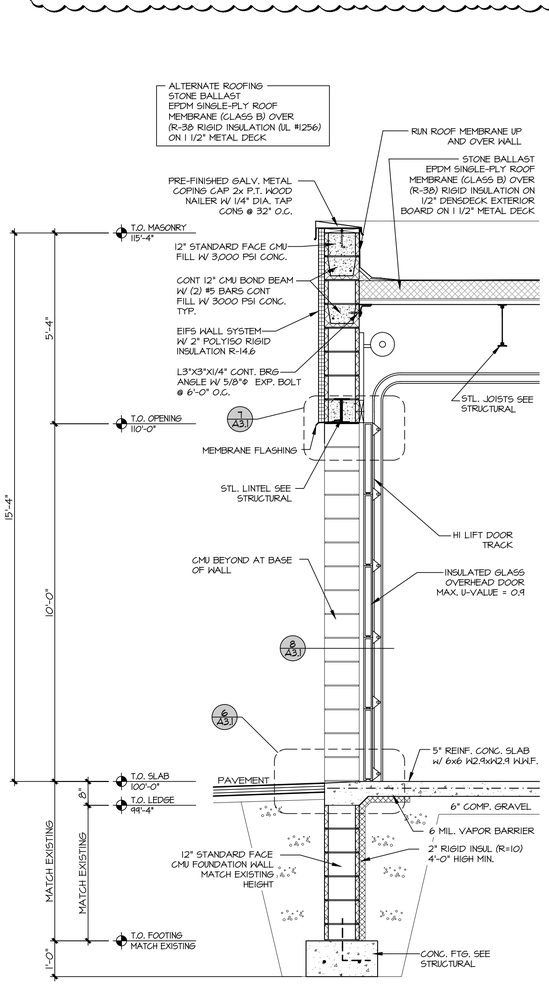

2 WALL SECTION
1/2" = 1'-0"

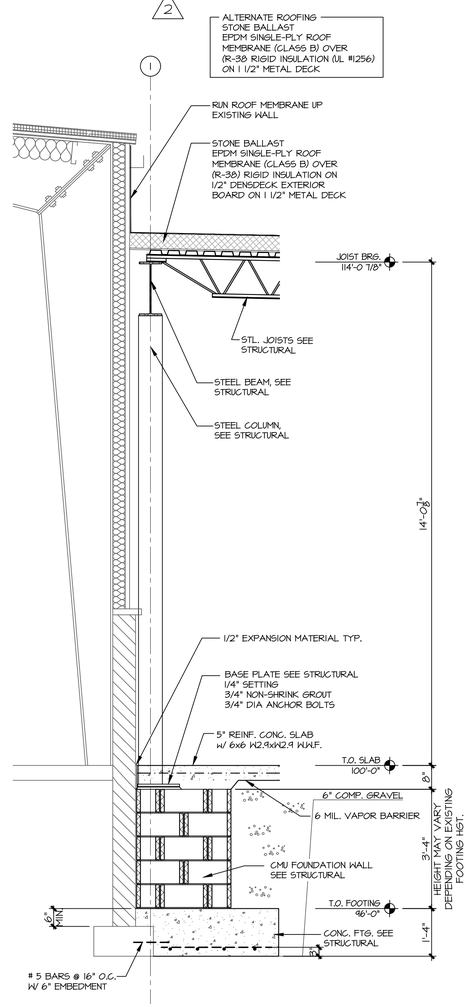

3 WALL SECTION
1/2" = 1'-0"

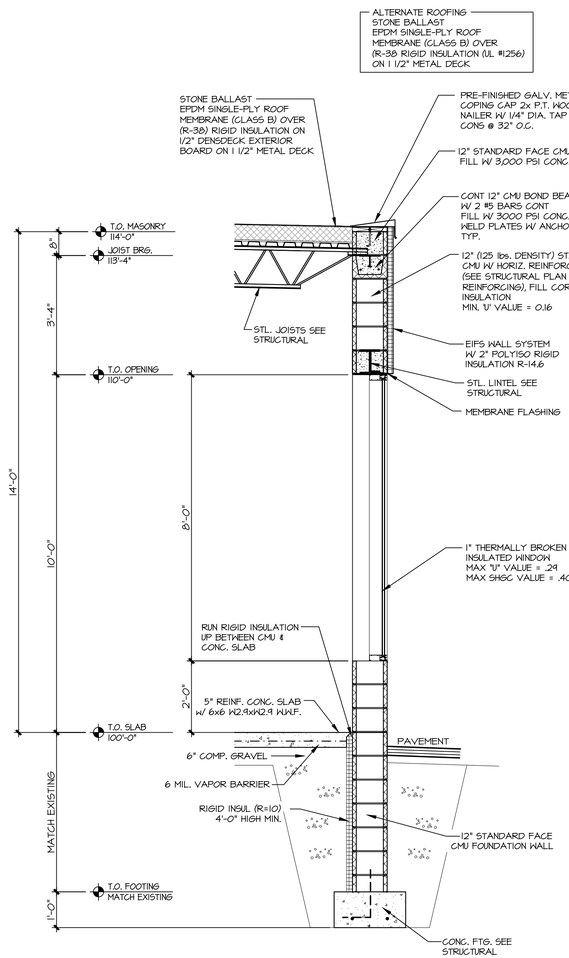

4 WALL SECTION
1/2" = 1'-0"

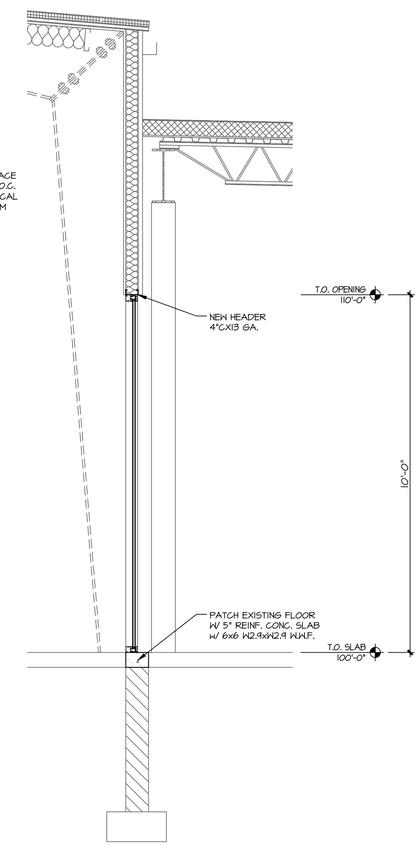

5 WALL SECTION
1/2" = 1'-0"

TDI ASSOCIATES, INC.
ARCHITECTURE & PLANNING

25217 SOUTH WIND LAKE ROAD
WIND LAKE, WISCONSIN 53185
PHONE 262-409-2530

PROFESSIONAL CONSULTANTS, INC.
300 COTTONWOOD AVE # 7
HARTLAND, WISCONSIN 53029
(262) 367-6080

RUSS DARROW KIA OF WAUKESHA
2141 EAST MORELAND BLVD
WAUKESHA, WISCONSIN

TDI ASSOCIATES, INC
All Rights Reserved

OWNERSHIP OF DOCUMENTS

This document, and the ideas and design incorporated herein, as an instrument of professional service, is the sole property of TDI Associates, Inc., and is not to be used in whole or in part for any other project or purpose without the expressed written authorization of TDI Associates, Inc.

Sheet Title
WALL SECTIONS

Issued For:	Date:
REV #2	06-27-2025

Date:	07-25-2024
Job NO.:	24103.000
Drawn By:	LCC

Sheet No.
A3.1

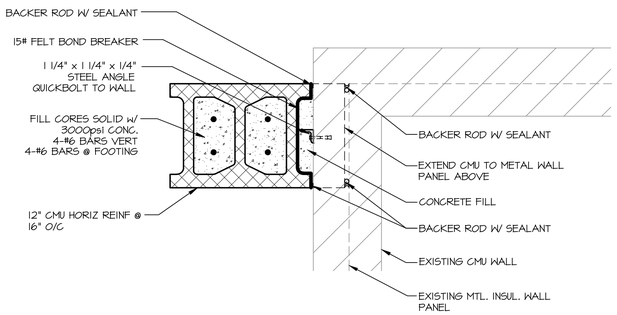

5 BUILDING JOINT DTL.
1 1/2" = 1'-0"

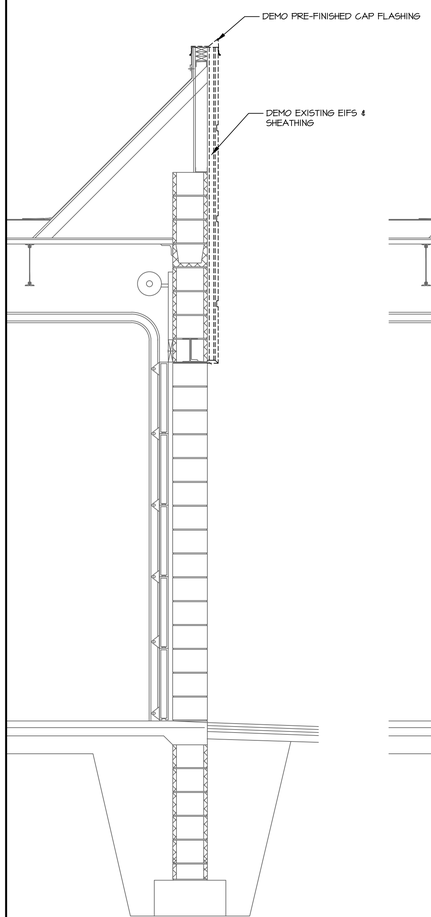

1 DEMO WALL SECTION
1/2" = 1'-0"

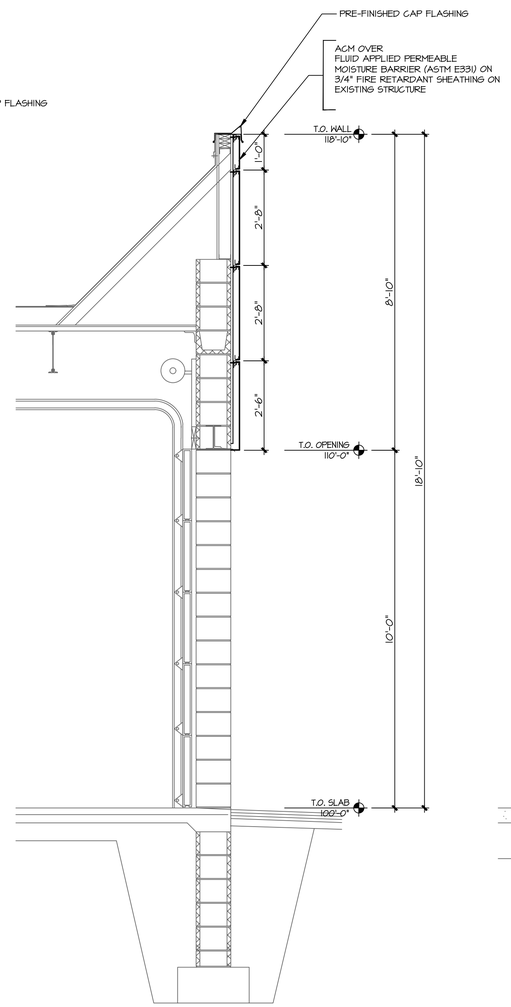

2 WALL SECTION
1/2" = 1'-0"

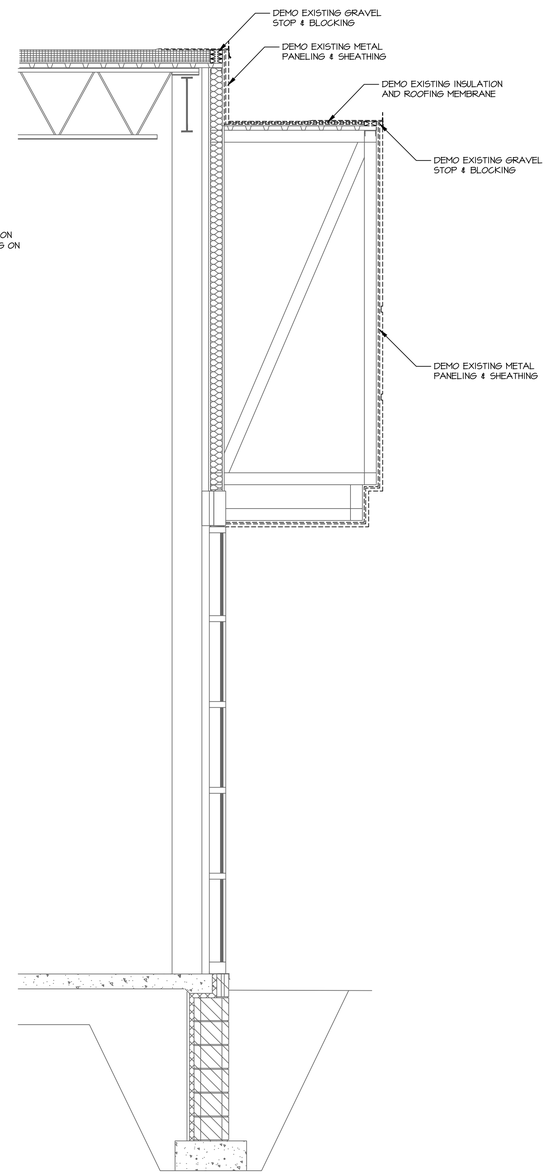

3 DEMO WALL SECTION
1/2" = 1'-0"

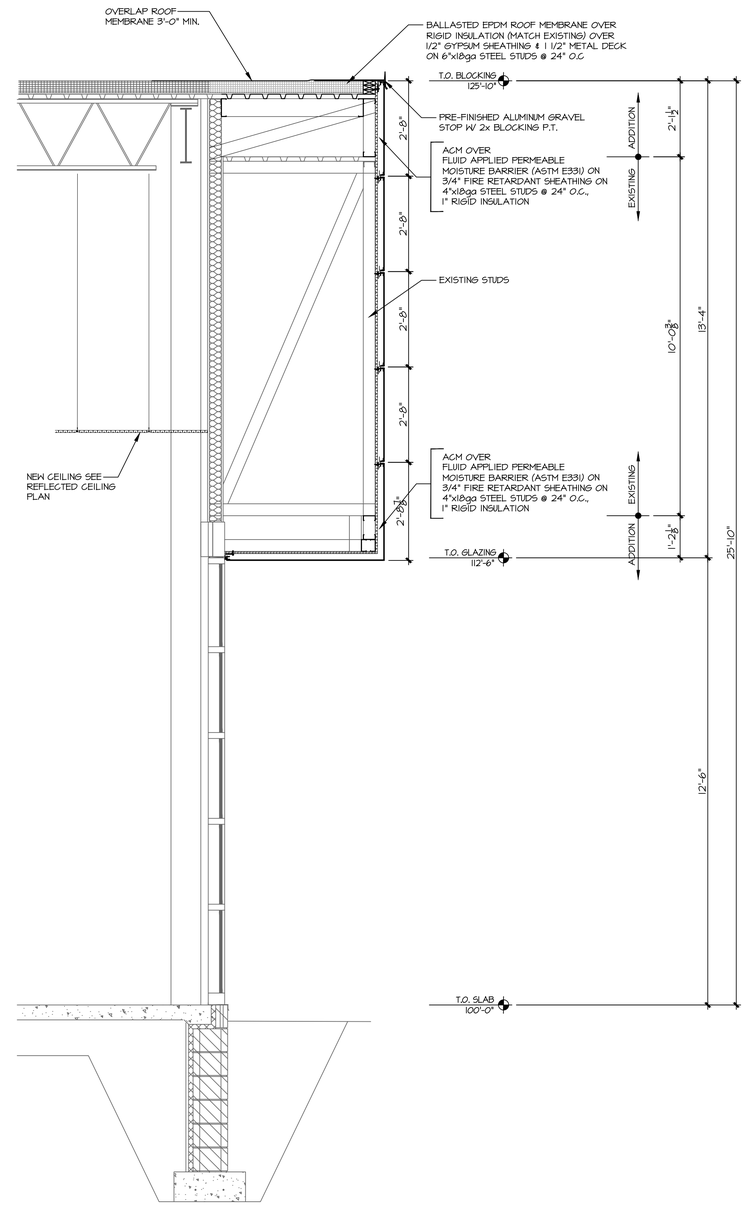

4 WALL SECTION
1/2" = 1'-0"

TDI ASSOCIATES, INC.
ARCHITECTURE & PLANNING

25217 SOUTH WIND LAKE ROAD
WIND LAKE, WISCONSIN 53185
PHONE 262-409-2530

PROFESSIONAL CONSULTANTS, INC.
300 COTTONWOOD AVE # 7
HARTLAND, WISCONSIN 53029
(262) 367-6080

RUSS DARROW
KIA OF WAUKESHA

2141 EAST MORELAND BLVD
WAUKESHA, WISCONSIN

TDI ASSOCIATES, INC
All Rights Reserved

OWNERSHIP OF DOCUMENTS

This document, and the ideas and design incorporated herein, as an instrument of professional service, is the sole property of TDI Associates, Inc., and is not to be used in whole or in part for any other project or purpose without the expressed written authorization of TDI Associates, Inc.

Sheet Title
WALL SECTIONS

Issued For: Date:
- -

Date: 07-25-2024
Job NO.: 24103.000
Drawn By: LCC
Sheet No.
A3.2

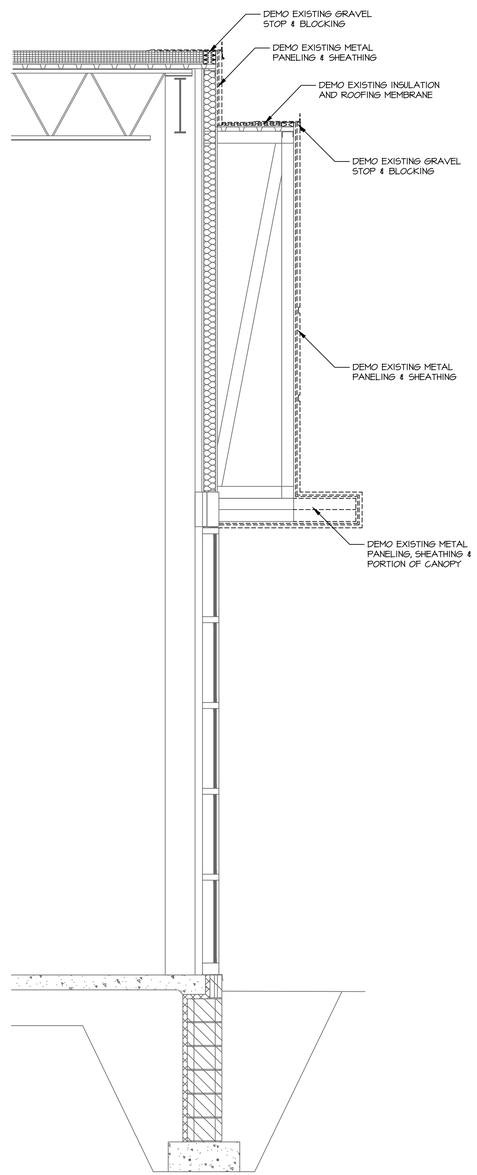

1 DEMO WALL SECTION
1/2" = 1'-0"

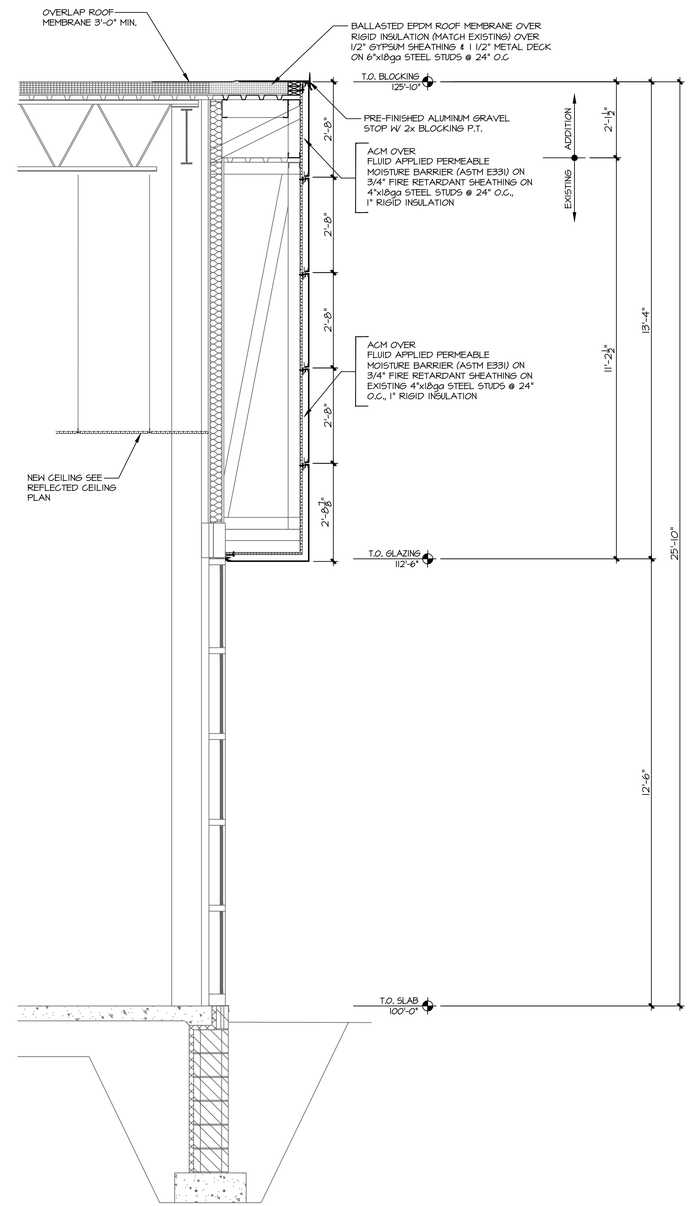

2 WALL SECTION
1/2" = 1'-0"

TDI ASSOCIATES, INC.
ARCHITECTURE & PLANNING

25217 SOUTH WIND LAKE ROAD
WIND LAKE, WISCONSIN 53185
PHONE 262-409-2530

PROFESSIONAL CONSULTANTS, INC.
300 COTTONWOOD AVE # 7
HARTLAND, WISCONSIN 53029
(262) 367-6080

RUSS DARROW
KIA OF WAUKESHA
2141 EAST MORELAND BLVD
WAUKESHA, WISCONSIN

TDI ASSOCIATES, INC
All Rights Reserved
OWNERSHIP OF DOCUMENTS
This document, and the ideas and design incorporated herein, as an instrument of professional service, is the sole property of TDI Associates, Inc., and is not to be used in whole or in part for any other project or purpose without the expressed written authorization of TDI Associates, Inc.

Sheet Title
WALL SECTIONS

Issued For: - Date: -

Date: 07-25-2024
Job NO.: 24103.000
Drawn By: LCC
Sheet No.
A3.3

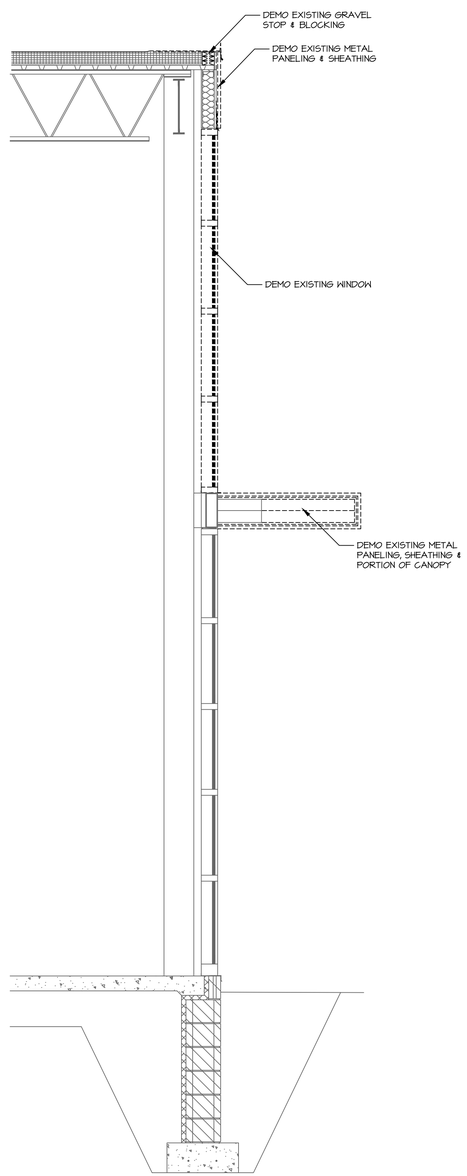

1 DEMO WALL SECTION
1/2" = 1'-0"

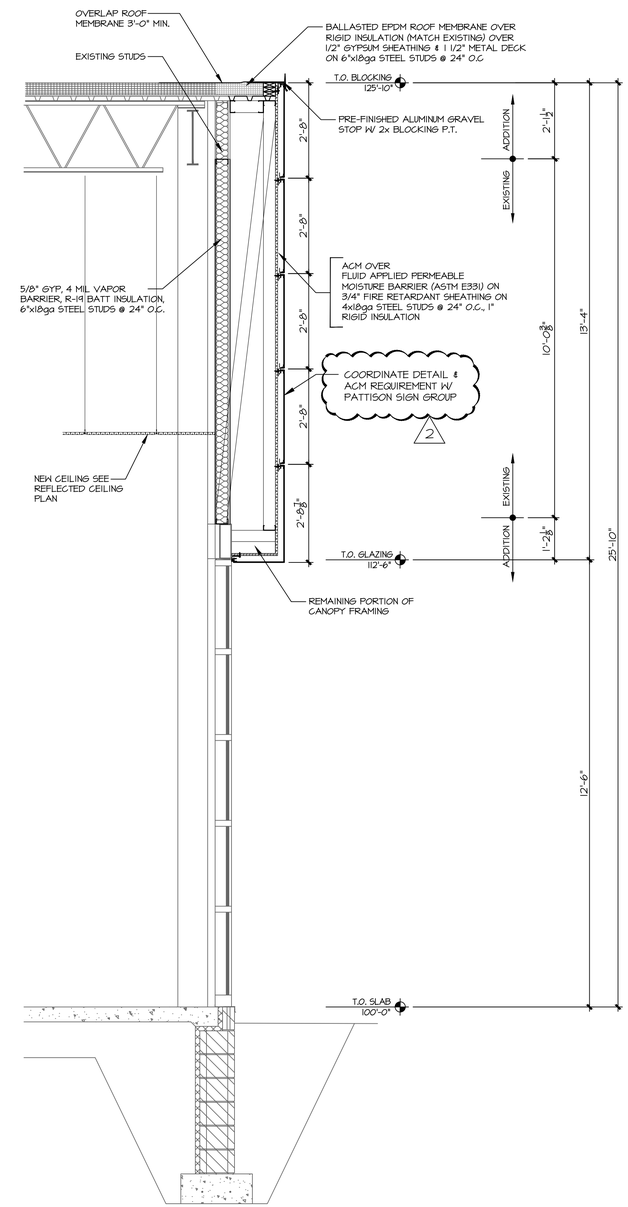

2 WALL SECTION
1/2" = 1'-0"

TDI ASSOCIATES, INC.
ARCHITECTURE & PLANNING

25217 SOUTH WIND LAKE ROAD
WIND LAKE, WISCONSIN 53185
PHONE 262-409-2530

PROFESSIONAL CONSULTANTS, INC.
300 COTTONWOOD AVE # 7
HARTLAND, WISCONSIN 53029
(262) 367-6080

RUSS DARROW
KIA OF WAUKESHA
2141 EAST MORELAND BLVD
WAUKESHA, WISCONSIN

TDI ASSOCIATES, INC
All Rights Reserved

OWNERSHIP OF DOCUMENTS

This document, and the ideas and design incorporated herein, as an instrument of professional service, is the sole property of TDI Associates, Inc., and is not to be used in whole or in part for any other project or purpose without the expressed written authorization of TDI Associates, Inc.

Sheet Title
WALL SECTIONS

Issued For:	Date:
REV #2	06-27-2025

Date:	07-25-2024
Job NO.:	24103.000
Drawn By:	LCC

Sheet No.
A3.4

LEGEND

#	NOTE DESIGNATOR - REFER TO DRAWING NOTES ON THIS SHEET
?-# / ?-#	FLOOR FINISH DESIGNATOR - REFER TO INTERIOR FINISH SCHEDULES WALL FINISH DESIGNATOR - REFER TO INTERIOR FINISH SCHEDULES

GENERAL NOTES

A. REFER TO WALL FINISH SCHEDULE FOR WALL FINISH INFORMATION.

B. REFER TO SHEET A6.1 FOR CEILING FINISHES.

C. ALL FINISHES AND MATERIALS SHOULD BE IN ACCORDANCE WITH DESIGN MANUAL

DRAWING NOTES

1. DOOR THRESHOLD.
2. FLOORING TRANSITION REQUIRED.
3. STEEL COLUMNS PAINTED P-3.
4. WB-1, P-6 TO BE USED FOR ALL CUSTOMER FACING ROOMS WITH LVT.
5. LINES TO BE PAINTED ON FLOOR FINISH.
6. INFINITE LOOP FLOOR TRANSITION. 3" WIDE EPOXY-3 PAINTED STRIPE.
7. WB-2 TO BE USED FOR ALL ROOMS WITH CARPET AND BACK OF HOUSE ROOMS.
8. RUG TO EITHER BE AR-1, AR-2 OR AR-3 DEPENDING ON LOUNGE SIZE RESTRICTIONS. REFER TO FINISH SCHEDULE FOR DIMENSIONS.

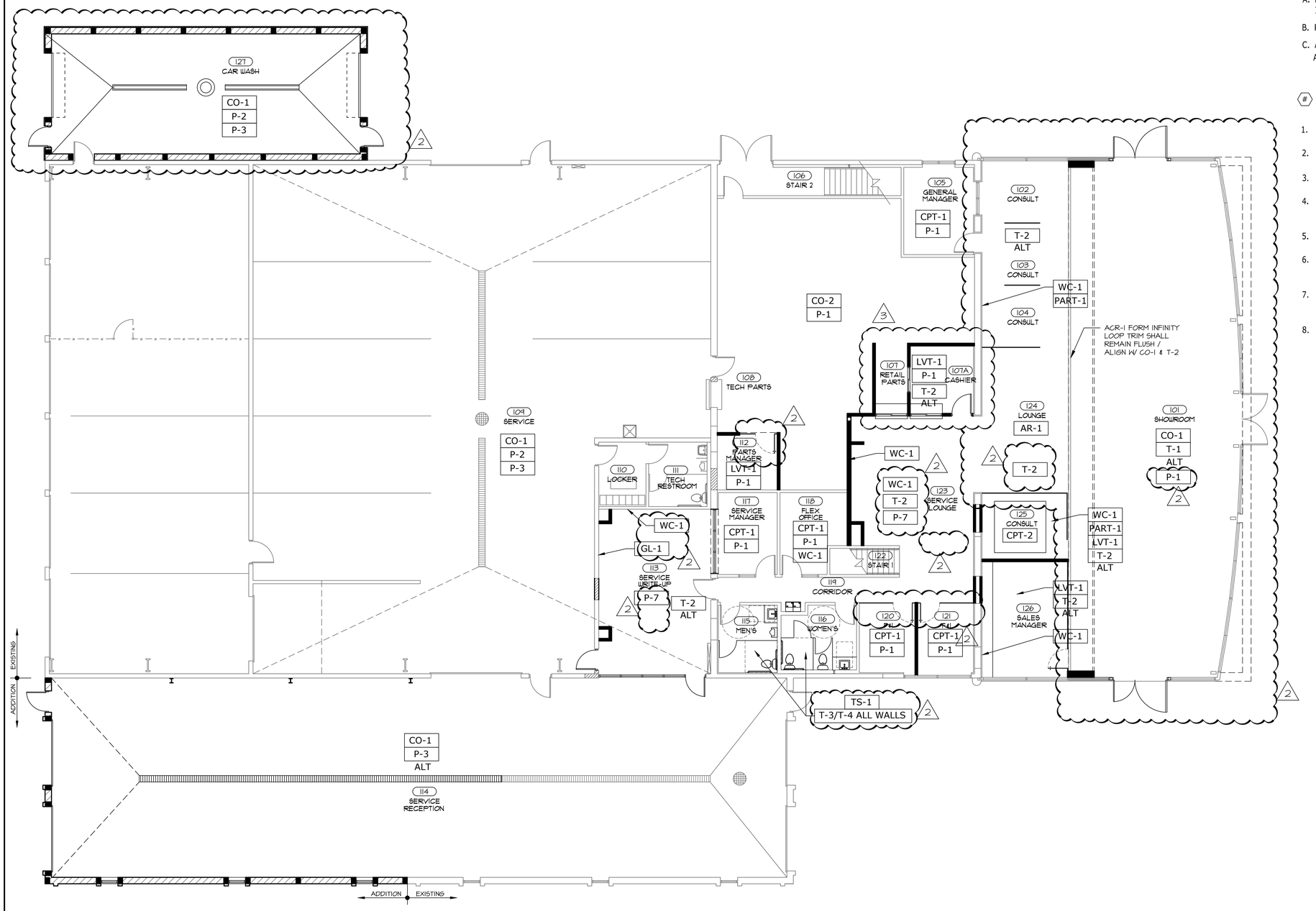

1 FIRST FLOOR FINISH PLAN
1/8"=1'-0"

NORTH

TDI ASSOCIATES, INC.
ARCHITECTURE & PLANNING

25217 SOUTH WIND LAKE ROAD
WIND LAKE, WISCONSIN 53185
PHONE 262-409-2530

PROFESSIONAL CONSULTANTS, INC.
300 COTTONWOOD AVE # 7
HARTLAND, WISCONSIN 53029
(262) 367-6080

RUSS DARROW KIA OF WAUKESHA
2141 EAST MORELAND BLVD
WAUKESHA, WISCONSIN

TDI ASSOCIATES, INC
All Rights Reserved

OWNERSHIP OF DOCUMENTS

This document, and the ideas and design incorporated herein, as an instrument of professional service, is the sole property of TDI Associates, Inc., and is not to be used in whole or in part for any other project or purpose without the expressed written authorization of TDI Associates, Inc.

Sheet Title
WALL & FLOOR FINISH PLAN

Issued For:	Date:
REV #2	06-27-2025
REV #3	08-06-2025

Date:	07-25-2024
Job NO.:	24103.000
Drawn By:	LCC

Sheet No.
A4.1

INTERIOR FINISH SCHEDULE

CODE	MATERIAL	NOTES	LOCATION	MANUFACTURER	PRODUCT	FINISH/COLOR	DIMENSION	WEBSITE	MANUFACTURER REPRESENTATIVE CONTACT INFORMATION
ACT-1	ACOUSTICAL CEILING TILES	CONTRACTOR TO COORDINATE ALL ADDITIONAL PARTS AND SYSTEMS THAT ARE RECOMMENDED BY THE MANUFACTURER TO COMPLETE INSTALL	SEE RCP	ARMSTRONG	LYRA PB CONCEALED ITEM 8433PB	COLOR:WHITE (WH) EDGE:BEVELED CONCEALED 15/16 SUSPENSION SYSTEM: WHITE	24" W X 48" L	https://www.armstrongceilings.com/commercial/en/commercial-ceilings-walls/lyra-concealed-ceiling-tiles.html#!query=LYRA	COMPANY: ARMSTRONG WORLD INDUSTRIES NAME: DEBORAH L. PICKENS P: 480-695-9053 E: DLPICKENS@ARMSTRONGCEILINGS.COM WWW.ARMSTRONGCEILINGS.COM
ACT-2	ACOUSTICAL CEILING TILES	CONTRACTOR TO COORDINATE ALL ADDITIONAL PARTS AND SYSTEMS THAT ARE RECOMMENDED BY THE MANUFACTURER TO COMPLETE INSTALL	SEE RCP	ARMSTRONG	ACOUSTIBUILT SEAMLESS ACOUSTICAL CEILING SYSTEM ITEM 2604	COLOR:FINE WHITE TEXTURE FINISH (FW) EDGE:EDGE: TAPERED	48" W X 72" L	https://www.armstrongceilings.com/commercial/en/commercial-ceilings-walls/acoustibuilt-ceiling-panels.html	COMPANY: ARMSTRONG WORLD INDUSTRIES NAME: DEBORAH L. PICKENS P: 480-695-9053 E: DLPICKENS@ARMSTRONGCEILINGS.COM WWW.ARMSTRONGCEILINGS.COM
ACR-1	NON-ILLUMINATED INFINITY LOOP	CONTRACTOR TO COORDINATE ALL ADDITIONAL PARTS AND SYSTEMS THAT ARE RECOMMENDED BY THE MANUFACTURER TO COMPLETE INSTALL	SEE FLOOR PLAN AND RCP	3 FORM	VARIA	COLOR: SO-572792.01 / LID:1065373 CLEAR SURFACE FINISH: STUCCO COLORED SURFACE FINISH: STUCCO	THICKNESS: ½"	https://3-form.com/materials/varia	COMPANY: 3FORM NAME: SUSAN STUDER P: 859-653-4069 E: SUSAN.STUDER@3FORM.COM WWW.3-FORM.COM/
AR-1	AREA RUG	CONTRACTOR TO COORDINATE ALL ADDITIONAL PARTS AND SYSTEMS THAT ARE RECOMMENDED BY THE MANUFACTURER TO COMPLETE INSTALL	LOUNGE	SHAW CONTRACT	STYLE: INHERIT SA229 CONSTRUCTION: MULTI-LEVEL PATTERN CUT/LOOP WEIGHT: 32 OZ. BACKING: NON-SKID RUBBER BACKING EDGE: RUBBER REDUCER, COLOR: 00114 LUNAR DUST	COLOR: GREY SLATE 6453S MANUFACTURING LAYOUT: 749588_RUG A / 749588_RUG B / 749588_RUG C	12' DIAMETER / 10' DIAMETER / 8' DIAMETER	https://www.shawcontract.com/en-us/products/SA229/	COMPANY: SHAW CONTRACT NAME: LAUREN THOMAS E: LAUREN.HILLNER.THOMAS@SHAWCONTRACT.COM WWW.SHAWCONTRACT.COM
AR-2	SQUARE RUG	CONTRACTOR TO COORDINATE ALL ADDITIONAL PARTS AND SYSTEMS THAT ARE RECOMMENDED BY THE MANUFACTURER TO COMPLETE INSTALL	LOUNGE	SHAW CONTRACT	STYLE: INHERIT SA229 CONSTRUCTION: MULTI-LEVEL PATTERN CUT/LOOP WEIGHT: 32 OZ. BACKING: NON-SKID RUBBER BACKING EDGE: RUBBER REDUCER, COLOR: 00114 LUNAR DUST	COLOR: GREY SLATE 6453S MANUFACTURING LAYOUT: 749588_RUG A / 749588_RUG B / 749588_RUG C	10' X 10' SQUARE	https://www.shawcontract.com/en-us/products/SA229/	COMPANY: SHAW CONTRACT NAME: LAUREN THOMAS E: LAUREN.HILLNER.THOMAS@SHAWCONTRACT.COM WWW.SHAWCONTRACT.COM
CO-1	CONCRETE DYE	FINISHING GRADE 1 = EXPOSES THE SAND PARTICLES IN THE CONCRETE. THE GRADE 1 FINISH SHOULD RESULT IN A "CREAMY LOOKING" SURFACE AND HAS THE MOST CONSISTENT APPEARANCE. FINISH CLASS 2: (SPECIFIED AS 800 GRIT) RESULTS IN A SURFACE THAT EXHIBITS A MODERATE LEVEL OF SPECULAR REFLECTIVITY. THIS FLOOR WITH BE REFLECTIVE, BUT WILL NOT BE "MIRROR-LIKE"	SHOWROOM, SERVICE RECEPTION, VEHICLE DELIVERY (VDC) / PHOTO BOOTH	SIKA	SCOFIELD FORMULA ONE LIQUID DYE FINISHING GRADE: GRADE 1 FINISHING CLASS: 2	COLOR:G38B SOFT GRAY	REFERENCE CONSTRUCTION DOCUMENTS	https://usa.sika.com/en/construction/concrete/decorative-concrete/stains-dyes/scofield-formulaoneliquiddyeconcentrate.html	COMPANY: SIKA NAME: CUSTOMER SERVICE P: 201-933-8800 WWW.USA.SIKA.COM
CO-2	CONCRETE	CONTRACTOR TO PREP SUBSTRATE AS RECOMMENDED BY THE MANUFACTURER	PARTS, TOOLS, RECEIVING	TO BE DETERMINED BY CONTRACTOR	CONTRACTOR TO SEAL CONCRETE SLAB WITH INDUSTRIAL SEALER THAT CAN WITHSTAND WATER AND HARSH CHEMICALS	COLOR:CLEAR	REFERENCE CONSTRUCTION DOCUMENTS	N/A	N/A
CPT-1	CARPET TILE	CONTRACTOR TO PREP SUBSTRATE AS RECOMMENDED BY THE MANUFACTURER INSTALLATION: ASHLAR PATTERN	OFFICES, SEE FINISH PLAN	SHAW CONTRACT	COLLECTION: COLLECTIVE STYLE: ST438-COLLECTIVE I TILE CONSTRUCTION: MULTI-LEVEL PATTERN LOOP FIBER:100% SOLUTION DYED ECO SOLUTION Q NYLON BACKING: ECOWORX TILE	COLOR:BLACK 38505	9" W X 36" L	https://www.shawcontract.com/en-us/product/details/ST438/colors/38505	COMPANY: SHAW CONTRACT NAME: LAUREN THOMAS E: LAUREN.HILLNER.THOMAS@SHAWCONTRACT.COM WWW.SHAWCONTRACT.COM
CPT-2	CARPET TILE	CONTRACTOR TO PREP SUBSTRATE AS RECOMMENDED BY THE MANUFACTURER INSTALLATION: ASHLAR PATTERN	CARPET INSET AT SEMI-ENCLOSED CONSULTATION OFFICES	SHAW CONTRACT	COLLECTION:- WEST ELM + SHAW CONTRACT STYLE: ST489 SPARK TILE CONSTRUCTION: MULTI-LEVEL PATTERN CUT/LOOP FIBER:100% SOLUTION DYED ECO SOLUTION Q NYLON BACKING: ECOWORX TILE	COLOR:BRIO-COLOR 87485	24" W X 24" L	https://www.shawcontract.com/en-us/products/ST489/colors/87485	COMPANY: SHAW CONTRACT NAME: LAUREN THOMAS E: LAUREN.HILLNER.THOMAS@SHAWCONTRACT.COM WWW.SHAWCONTRACT.COM
EPOXY-1	EPOXY	REFERENCE MANUFACUTERS GUIDELINES FOR SURFACE PREP AND INSTALLATION	SERVICE FLOOR	FLOROCK	FLUID-APPLIED FLOORING TYPE FAF-4: EPOXY FLOOR, FOLLOWED BY CHEMICAL RESISTANT HIGH WEAR URETHANE. 1: PRIMER COAT: TWO-COMPONENT EPOXY. APPLY AT 10-12 MILS. A: PRODUCT: FLOROCK FLOROPOXY 4700 2: OVERLAY: EPOXY AND SAND AGGREGATE MIXTURE TROWELED IN PLACE, APPLIED AT 1/4" THICKNESS. A: PRODUCT: FLOROCK FLOROPOXY 4865 B: COLOR: BLACK 3: GROUT COAT: HIGH-PERFORMANCE EPOXY RESIN. APPLY AT 16 MILS. A: PRODUCT: FLOROCK FLOROPOXY 4865 B: COLOR: BLACK 4: GROUT COAT: HIGH-PERFORMANCE EPOXY RESIN. APPLY AT 16 MILS A: PRODUCT: FLOROCK FLOROPOXY 4805 B: COLOR: BLACK 5: TOPCOAT - URETHANE TOP COAT: FLOROTHAN MC HT A: COLOR: BLACK B: SLIP RESISTANCE AS REQUIRED	COLOR:BLACK FINISH:GLOSS TEXTURE: SAND	REFERENCE CONSTRUCTION DOCUMENTS	https://www.florock.net/	COMPANY: FLOROCK NAME:RICK OLEJNIK P:616-915-4840 E:RICK.OLEJNIK@FLOROCK.NET WWW.FLOROCK.NET
EPOXY-2	EPOXY	REFERENCE MANUFACUTERS GUIDELINES FOR SURFACE PREP AND INSTALLATION	SERVICE FLOOR	FLOROCK	FLUID-APPLIED FLOORING TYPE FAF-4: EPOXY FLOOR, FOLLOWED BY CHEMICAL RESISTANT HIGH WEAR URETHANE. 1: PRIMER COAT: TWO-COMPONENT EPOXY. APPLY AT 10-12 MILS. A: PRODUCT: FLOROCK FLOROPOXY 4700 2: OVERLAY: EPOXY AND SAND AGGREGATE MIXTURE TROWELED IN PLACE, APPLIED AT 1/4" THICKNESS. A: PRODUCT: FLOROCK FLOROPOXY 4865 B: COLOR: LIGHT GREY 3: GROUT COAT: HIGH-PERFORMANCE EPOXY RESIN. APPLY AT 16 MILS. A: PRODUCT: FLOROCK FLOROPOXY 4865 B: COLOR: LIGHT GREY 4: GROUT COAT: HIGH-PERFORMANCE EPOXY RESIN. APPLY AT 16 MILS A: PRODUCT: FLOROCK FLOROPOXY 4805 B: COLOR: LIGHT GREY 5: TOPCOAT - URETHANE TOP COAT: FLOROTHAN MC HT A: COLOR: LIGHT GREY B: SLIP RESISTANCE AS REQUIRED	COLOR:LIGHT GREY FINISH: GLOSS TEXTURE: SAND	REFERENCE CONSTRUCTION DOCUMENTS	https://www.florock.net/	COMPANY: FLOROCK NAME:RICK OLEJNIK P:616-915-4840 E:RICK.OLEJNIK@FLOROCK.NET WWW.FLOROCK.NET
EPOXY-3	EPOXY	REFERENCE MANUFACUTERS GUIDELINES FOR SURFACE PREP AND INSTALLATION	INFINITY LOOP	FLOROCK	FLUID-APPLIED FLOORING TYPE FAF-4: EPOXY FLOOR, FOLLOWED BY CHEMICAL RESISTANT HIGH WEAR URETHANE. 1: PRIMER COAT: TWO-COMPONENT EPOXY. APPLY AT 10-12 MILS. A: PRODUCT: FLOROCK FLOROPOXY 4700 2: OVERLAY: EPOXY AND SAND AGGREGATE MIXTURE TROWELED IN PLACE, APPLIED AT 1/4" THICKNESS. A: PRODUCT: FLOROCK FLOROPOXY 4865 B: COLOR: PMS 185C 3: GROUT COAT: HIGH-PERFORMANCE EPOXY RESIN. APPLY AT 16 MILS. A: PRODUCT: FLOROCK FLOROPOXY 4865 B: COLOR: PMS 185C 4: GROUT COAT: HIGH-PERFORMANCE EPOXY RESIN. APPLY AT 16 MILS A: PRODUCT: FLOROCK FLOROPOXY 4805 B: COLOR: PMS 185C 5: TOPCOAT - URETHANE TOP COAT: FLOROTHAN MC HT A: COLOR: PMS 185C B: SLIP RESISTANCE AS REQUIRED	COLOR:TO MATCH PMS 185C FINISH:GLOSS TEXTURE: SMOOTH	REFERENCE CONSTRUCTION DOCUMENTS	https://www.florock.net/	COMPANY: FLOROCK NAME:RICK OLEJNIK P:616-915-4840 E:RICK.OLEJNIK@FLOROCK.NET WWW.FLOROCK.NET
GF-1	GLASS FILM	CONTRACTOR TO COORDINATE ALL ADDITIONAL PARTS AND SYSTEMS THAT ARE RECOMMENDED BY THE MANUFACTURER TO COMPLETE INSTALL	ALL SHOWROOM AND LOUNGE AREA GLASS	DECORATIVE FILMS	SOLYX GLASS FINISHES	COLOR: SXJ -0548 DUAL FEATHER GRADIENT	60" WIDE ROLL	https://www.decorativefilm.com/sxj-0548-dual-feather-gradient	COMPANY: DECORATIVE FILM NAME:IBRAYINA MANINAT P:888-627-5224 F: 240-363-4818 E: N/A WWW.DECORATIVEFILM.COM
GL-1	GLASS	CONTRACTOR RESPONSIBLE TO COORDINATE APPROPRIATE HARDWARE WITH MANUFACTURER	BRAND WALL	SKYLINE GLASS	VITRACOLOR BACK-PAINTED LOW-IRON TEMPERED SAFETY GLASS	COLOR:CUSTOM TO MATCH PMS 7547 C	MAX PANEL SIZE: 46" X 144" 1/4" THICKNESS	https://skydesign.com/glass_type/vitracolor-back-painted-glass/	COMPANY: SKYLINE DESIGN NAME: ANTHONY HAMMOND P: 773-435-5994 E: ANTHONY.H@SKYDESIGN.COM SALES@SKYDESIGN.COM WWW.SKYDESIGN.COM
LVT-1	LUXURY VINYL TILE	ALTERNATE TO T-2 PREP AND PRIME SURFACES PER MANUFACTURER'S RECOMMENDATIONS	LOUNGE AREAS, CONSULT AREAS, CORRIDORS	MATTER SURFACES	WINEO PURLINE LVT, WOOD XL	COLOR: CRAFTED OAK	10" W X 59" L	https://mattersurfaces.com/purline-crafted-oak	COMPANY: MATS INC. NAME:MARK SADAUSKAS P: 781-573-0216 M:614-743-7146 E:MSADAUSKAS@MATSINC.COM WWW.MATSINC.COM
LVT-1 ALT	LUXURY VINYL TILE	ALTERNATE TO LVT-1 PREP AND PRIME SURFACES PER MANUFACTURER'S RECOMMENDATIONS	LOUNGE AREAS, CONSULT AREAS, CORRIDORS	AUTOSTONE	LV WOODPLANK	COLOR: MAPLE BEECH FINISH: TEXTURE WOOD GRAIN	7" W X 48" L	https://autostoneusa.com/kia/	COMPANY: AUTOSTONE USA NAME: BARRY WELLS P: 214-830-1206 E: KSA@AUTOSTONEUSA.COM WWW.AUTOSTONEUSA.COM
P-1	PAINT	PREP AND PRIME SURFACES PER MANUFACTURER'S RECOMMENDATIONS	WALLS UNLESS NOTED OTHERWISE	BENJAMIN MOORE	AURA WATERBORNE INTERIOR ACRYLIC LATEX PAINT	COLOR: OC-61 WHITE DIAMOND FINISH: FLAT FOR CEILINGS / SOFFITTS FINISH: EGGSHELL FOR WALLS	N/A	https://store.benjaminmoore.com/storefront/us/en/coating/interior-paints/benjamin-moore/aura-waterborne-interior-paint/aura/p/N522 https://store.benjaminmoore.com/storefront/us/en/coating/interior-paints/benjamin-moore/aura-waterborne-interior-paint/aura/p/N524	COMPANY: BENJAMIN MOORE NAME: DOROTHY HAZINSKI P: 866-708-9181 M: 330-353-3850 E: DOROTHY.HAZINSKI@BENJAMINMOORE.COM WWW.BENJAMINMOORE.COM
P-2	PAINT	PREP AND PRIME SURFACES PER MANUFACTURER'S RECOMMENDATIONS	SHOWROOM SOFFIT, LOUNGE, VEHICLE DELIVERY (VDC)/PHOTO BOOTH WALLS	BENJAMIN MOORE	AURA WATERBORNE INTERIOR ACRYLIC LATEX PAINT	COLOR: 2129-10 MIDNIGHT DREAM FINISH: FLAT FOR SOFFITS FINISH: EGGSHELL FOR WALLS	N/A	https://store.benjaminmoore.com/storefront/us/en/coating/interior-paints/benjamin-moore/aura-waterborne-interior-paint/aura/p/N522 https://store.benjaminmoore.com/storefront/us/en/coating/interior-paints/benjamin-moore/aura-waterborne-interior-paint/aura/p/N524	COMPANY: BENJAMIN MOORE NAME: DOROTHY HAZINSKI P: 866-708-9181 M: 330-353-3850 E: DOROTHY.HAZINSKI@BENJAMINMOORE.COM WWW.BENJAMINMOORE.COM
P-3	PAINT	PREP AND PRIME SURFACES PER MANUFACTURER'S RECOMMENDATIONS	SERVICE DRIVE WALLS AND SHOWROOM COLUMNS	BENJAMIN MOORE	AURA WATERBORNE INTERIOR ACRYLIC LATEX PAINT	COLOR: HC-169 COVENTRY GRAY FINISH: EGGSHELL	N/A	https://store.benjaminmoore.com/storefront/us/en/coating/interior-paints/benjamin-moore/aura-waterborne-interior-paint/aura/p/N524 https://store.benjaminmoore.com/storefront/us/en/coating/interior-paints/	COMPANY: BENJAMIN MOORE NAME: DOROTHY HAZINSKI P: 866-708-9181 M: 330-353-3850 E: DOROTHY.HAZINSKI@BENJAMINMOORE.COM WWW.BENJAMINMOORE.COM
P-4	PAINT	PREP AND PRIME SURFACES PER MANUFACTURER'S RECOMMENDATIONS	DOORS	BENJAMIN MOORE	AURA WATERBORNE INTERIOR ACRYLIC LATEX PAINT	COLOR: HC-169 COVENTRY GRAY FINISH: EGGSHELL	N/A	https://store.benjaminmoore.com/storefront/us/en/coating/interior-paints/benjamin-moore/aura-waterborne-interior-paint/aura/p/N524	COMPANY: BENJAMIN MOORE NAME: DOROTHY HAZINSKI P: 866-708-9181 M: 330-353-3850 E: DOROTHY.HAZINSKI@BENJAMINMOORE.COM WWW.BENJAMINMOORE.COM
P-6		PREP AND PRIME SURFACES PER MANUFACTURER'S RECOMMENDATIONS	REFERENCE CONSTRUCTION DOCUMENTS	BENJAMIN MOORE	COROTECH COMMAND WATERBORNE ACRYLIC URETHANE	COLOR: 1117 GUESTHOUSE FINISH: EGGSHELL	N/A	https://store.benjaminmoore.com/storefront/us/en/coating/interior-paints/stains/product-catalog/cwe/corotech-waterborne-enamels	COMPANY: BENJAMIN MOORE NAME: DOROTHY HAZINSKI P: 866-708-9181 M: 330-353-3850 E: DOROTHY.HAZINSKI@BENJAMINMOORE.COM WWW.BENJAMINMOORE.COM
P-7		PREP AND PRIME SURFACES PER MANUFACTURER'S RECOMMENDATIONS	SHOWROOM WALLS AS NOTED	BENJAMIN MOORE	AURA WATERBORNE INTERIOR ACRYLIC LATEX PAINT	COLOR: OC-10 WHITE SAND FINISH: EGGSHELL	N/A	https://store.benjaminmoore.com/storefront/us/en/coating/interior-paints/paints/benjamin-moore/aura-waterborne-interior-paint/aura/p/N524	COMPANY: BENJAMIN MOORE NAME: DOROTHY HAZINSKI P: 866-708-9181 M: 330-353-3850 E: DOROTHY.HAZINSKI@BENJAMINMOORE.COM WWW.BENJAMINMOORE.COM
P-8	METALLIC PAINT	PREP AND PRIME SURFACES PER MANUFACTURER'S RECOMMENDATIONS	SHOWROOM WALLS AS NOTED, LOUNGE CEILING COVE	CRESCENT BRONZE POWDER CO.	METALLIC PIGMENTS AND PAINTS	COLLECTION: DESIGNER TONES COLOR: PALE 251	N/A	https://www.crescentbronze.com/product-page/extra-fine-aluminum-120-metallic-powder	COMPANY: CRESCENT BRONZE POWDER CO. NAME: CUSTOMER SERVICE O: 920-230-3270 P: 800-445-6810 WWW.CRESCENTBRONZE.COM
P-9	PAINT	PREP AND PRIME SURFACES PER MANUFACTURER'S RECOMMENDATIONS	INFINITY LOOP	BENJAMIN MOORE	COROTECH COMMAND WATERBORNE ACRYLIC URETHANE GLOSS V390	COLOR: HC-181 HERITAGE RED	N/A	https://store.benjaminmoore.com/storefront/us/en/coating/interior-paints/stains/product-catalog/cwe/corotech-waterborne-enamels	COMPANY: BENJAMIN MOORE NAME: DOROTHY HAZINSKI P: 866-708-9181 M: 330-353-3850 E: DOROTHY.HAZINSKI@BENJAMINMOORE.COM WWW.BENJAMINMOORE.COM
P-10	METALLIC PAINT 2	PREP AND PRIME SURFACES PER MANUFACTURER'S RECOMMENDATIONS	INFINITY LOOP	CRESCENT BRONZE POWDER CO.	METALLIC PIGMENTS AND PAINTS	COLOR: BLACK 781	N/A	https://www.crescentbronze.com/product-page/black-10111p-METALLIC-metallic-powder	COMPANY: CRESCENT BRONZE POWDER CO. NAME: CUSTOMER SERVICE O: 920-230-3270 P: 800-445-6810 WWW.CRESCENTBRONZE.COM
PC-1	INTERIOR POWDERCOAT	N/A	INFINITY LOOP	PRISMATIC POWDERS	INTERIOR GRADE POWDERCOAT	COLOR: RAL 3020 FINISH: GLOSS	REFERENCE CONSTRUCTION DOCUMENTS	https://www.prismaticpowders.com/shop/powder-coating-colors/RAL-3020/ral-3020	COMPANY: NIC INDUSTRIES NAME: JESSIE GRAHAM P: 541-830-6502 M: 541-326-5051 E: JESSIE@NICINDUSTRIES.COM WWW.PRISMATICPOWDERS.COM
PC-2	INTERIOR POWDERCOAT	N/A	BRAND WALL BASE	TIGER DRYLAC	INTERIOR GRADE POWDERCOAT	COLOR: RAL 9005 49/82830 FINISH: MATTE	REFERENCE CONSTRUCTION DOCUMENTS	https://fs18.formsite.com/jRcwcI/specifierTIGERorderform/index.html	COMPANY: TIGER DRYLAC NAME: MITCH ANGELES P: 331-801-5783 M: 630-593-3532 E: MITCH.ANGELES@TIGER-COATINGS.COM WWW.TIGER-COATINGS.COM

TDI ASSOCIATES, INC.
ARCHITECTURE & PLANNING

25217 SOUTH WIND LAKE ROAD
WIND LAKE, WISCONSIN 53185
PHONE 262-409-2530

PROFESSIONAL CONSULTANTS, INC.

300 COTTONWOOD AVE # 7
HARTLAND, WISCONSIN 53029
(262) 367-6080

RUSS DARROW
KIA OF WAUKESHA

2141 EAST MORELAND BLVD
WAUKESHA, WISCONSIN

TDI ASSOCIATES, INC
All Rights Reserved

OWNERSHIP OF DOCUMENTS

This document, and the ideas and design incorporated herein, as an instrument of professional service, is the sole property of TDI Associates, Inc., and is not to be used in whole or in part for any other project or purpose without the expressed written authorization of TDI Associates, Inc.

Sheet Title
INTERIOR FINISH SCHEDULE

Issued For: Date:
REV #2 06-27-2025

Date: 07-25-2024

Job NO.: 24103.000

Drawn By: LCC

Sheet No.
A4.2

INTERIOR FINISH SCHEDULE CONTINUED

PC-3	INTERIOR POWDERCOAT	N/A	PART-1	PRISMATIC POWDERS	INTERIOR GRADE POWDERCOAT	COLOR: EMB-4448, TOMIC GOLD II FINISH: SATIN	REFERENCE CONSTRUCTION DOCUMENTS	EMB-4448/tomic-gold-ii	P: 541-830-6502 M: 541-326-5051 E: JESSE@NICINDUSTRIES.COM WWW.PRISMATICPOWDERS.COM
PL-1	PLASTIC LAMINATE	N/A	FIXTURES, CUSTOMER FACING CABINETS, CUSTOMER FACING DOORS	WILSONART	STANDARD HIGH PRESSURE LAMINATE	COLOR: 7996-38 NATURAL RECON FINISH: FINE VELVET	REFERENCE CONSTRUCTION AND FIXTURE DOCUMENTS	https://www.wilsonart.com/natural-recon-7996	COMPANY: WILSONART NAME: LIZ MCMILLAN P: 562-781-4057 E: MCMILLE@WILSONART.COM WWW.WILSONART.COM
PL-3	PLASTIC LAMINATE	N/A	BATHROOM CABINETS	WILSONART	STANDARD HIGH PRESSURE LAMINATE	COLOR: BLACK #1595 FINISH: 60 MATTE	REFERENCE CONSTRUCTION AND FIXTURE DOCUMENTS	https://www.wilsonart.com/designer-white-d354	COMPANY: WILSONART NAME: LIZ MCMILLAN P: 562-781-4057 E: MCMILLE@WILSONART.COM WWW.WILSONART.COM
PL-4	PLASTIC LAMINATE	N/A	BACK OF HOUSE CABINETS	WILSONART	STANDARD HIGH PRESSURE LAMINATE	COLOR: CARBON MESH 4880-38 FINISH: FINE VELVET	REFERENCE CONSTRUCTION AND FIXTURE DOCUMENTS	https://www.wilsonart.com/carbon-mesh-4880	COMPANY: WILSONART NAME: LIZ MCMILLAN P: 562-781-4057 E: MCMILLE@WILSONART.COM WWW.WILSONART.COM
SS-1	SOLID SURFACE	N/A	FIXTURES, RESTROOMS, CUSTOMER FACING COUNTERS	LX HAUSYS	HI-MACS SOLID SURFACE	COLOR: KAMET L017	REFERENCE CONSTRUCTION AND FIXTURE DOCUMENTS	ttps://www.lxhausys.com/us/products.html#/himacs/Kamet/2551	COMPANY: LX HAUSYS NAME: MICHELLE ALLEN P: 513-214-9939 E: MALLEN@LXHAUSYS.COM WWW.LXHAUSYS.COM
SS-1 ALT	SOLID SURFACE	ALTERNATE TO SS-1	FIXTURES, RESTROOMS, CUSTOMER FACING COUNTERS	WILSONART	ACRYLIC RESIN BASED SOLID SURFACE	COLOR: WHITE STONE 9208CS	REFERENCE CONSTRUCTION AND FIXTURE DOCUMENTS	https://www.richelieu.com/us/en/category/surfaces-panels-and-edgebanding/colors/white-stone-9208cs-sheet/1201983/sku-W9208CS130	COMPANY: WILSONART NAME: LIZ MCMILLAN P: 562-781-4057 E: MCMILLE@WILSONART.COM WWW.WILSONART.COM
T-1	TILE	ALTERNATE TO CO-1 TO BE USED WHEN NEW CONCRETE CANNOT BE POURED INSTALL STACKBOND	RESTROOMS	AUTOSTONE	CERAMIC TILE	COLLECTION: CONCRETE COLOR: SMOKE FINISH: NATURAL, HONED GROUT COLOR: MAPEI 27 SILVER	32" W X 32" L	solid-surfaces-wilsonart/wilsonart-solid-surfaces-particulate-https://autostoneusa.com/kia/	COMPANY: AUTOSTONE USA NAME: BARRY WELLS P: 214-830-1206 E: KIA@AUTOSTONEUSA.COM WWW.AUTOSTONEUSA.COM
T-1 ALT	TILE	ALTERNATE TO T-1 TO BE USED WHEN NEW CONCRETE CANNOT BE POURED INSTALL STACKBOND	RESTROOMS	DALTILE	CERAMIC TILE	COLLECTION: ANDERS COLOR: SHADOW AN13 FINISH: MATTE GROUT COLOR: MAPEI 27 SILVER	32" W X 32" L	https://www.daltile.com/products/Concrete-Look/Anders/Shadow	COMPANY: DALTILE NAME: DAVID SANTIBANEZ M: 562-644-4360 E: DAVID.SANTIBANEZ@DALTILE.COM WWW.DALTILE.COM
T-2	TILE	PREP AND PRIME SURFACES PER MANUFACTURER'S RECOMMENDATIONS	CUSTOMER SALES AREA, SALES AREA	CREATIVE MATERIALS CORP.	CERAMIC TILE	COLLECTION: INYO COLOR: GOLD FINISH: MATTE GROUT COLOR: MAPEI 05 CHAMOIS	8" W X 48" L	https://www.creativematerialscorp.com/product/inyo/	COMPANY: CREATIVE MATERIALS CORPORATION NAME: DOUG SALATINO P: 518-713-5371 C: 518-281-8264 E: DSALATINO@CREATIVEMATERIALSCORP.COM WWW.CREATIVEMATERIALSCORP.COM
T-2 ALT1	TILE	ALTERNATE TO T-2 PREP AND PRIME SURFACES PER MANUFACTURER'S RECOMMENDATIONS	CUSTOMER SALES AREA, SALES AREA	AUTOSTONE	CERAMIC TILE	COLLECTION: AMBERWOOD PLAN COLOR: MAPPLE HARVEST FINISH: NATURAL GROUT COLOR: MAPEI 05 CHAMOIS	8" W X 48" L	https://autostoneusa.com/kia/	COMPANY: AUTOSTONE USA NAME: BARRY WELLS P: 214-830-1206 E: KIA@AUTOSTONEUSA.COM WWW.AUTOSTONEUSA.COM
T-2 ALT2	TILE	ALTERNATE TO T-2 PREP AND PRIME SURFACES PER MANUFACTURER'S RECOMMENDATIONS	CUSTOMER SALES AREA, SALES AREA	DALTILE	CERAMIC TILE	COLLECTION: FOREST PARK COLOR: SUMMERTREE FP9995 GROUT COLOR: MAPEI 05 CHAMOIS	9" W X 36" L	https://www.daltile.com/products/wood-look/forest-park	COMPANY: DALTILE NAME: DAVID SANTIBANEZ M: 562-644-4360 E: DAVID.SANTIBANEZ@DALTILE.COM WWW.DALTILE.COM
T-3	TILE	PREP AND PRIME SURFACES PER MANUFACTURER'S RECOMMENDATIONS. INSTALLED IN VERTICAL STACK BOND, 4'-0" TO UNDERSIDE OF CLG	RESTROOMS	CREATIVE MATERIALS CORP.	WALL TILE	COLLECTION: URBAN SUBWAY COLOR: WHITE FINISH: MATTE GROUT COLOR: MAPEI 77 FROST	3" W X 10" L	https://www.creativematerialscorp.com/product/tune/	COMPANY: CREATIVE MATERIALS CORPORATION NAME: DOUG SALATINO P: 518-713-5371 C: 518-281-8264 E: DSALATINO@CREATIVEMATERIALSCORP.COM WWW.CREATIVEMATERIALSCORP.COM
T-3 ALT1	TILE	ALTERNATE TO T-3 PREP AND PRIME SURFACES PER MANUFACTURER'S RECOMMENDATIONS INSTALLED IN VERTICAL STACK BOND, 4'-0" TO UNDERSIDE OF CLG	RESTROOMS	AUTOSTONE	WALL TILE	COLLECTION: STATION AMERICAN-A COLOR: WHITE FINISH: MATTE GROUT COLOR: MAPEI 77 FROST	4" W X 16" L	https://autostoneusa.com/kia/	COMPANY: AUTOSTONE USA NAME: BARRY WELLS P: 214-830-1206 E: KIA@AUTOSTONEUSA.COM WWW.AUTOSTONEUSA.COM
T-3 ALT2	TILE	ALTERNATE TO T-3 PREP AND PRIME SURFACES PER MANUFACTURER'S RECOMMENDATIONS INSTALLED IN VERTICAL STACK BOND, 4'-0" TO UNDERSIDE OF CLG	RESTROOMS	DALTILE	WALL TILE	COLLECTION: STENCIL,FLAT FLOOR TILE COLOR: WHITE SC32 FINISH: MATTE GROUT COLOR: MAPEI 77 FROST	4" W X 12" L	https://www.daltile.com/products/Monochromatic-Look/Stencil/White	COMPANY: DALTILE NAME: DAVID SANTIBANEZ M: 562-644-4360 E: DAVID.SANTIBANEZ@DALTILE.COM WWW.DALTILE.COM
T-4	TILE	PREP AND PRIME SURFACES PER MANUFACTURER'S RECOMMENDATIONS INSTALLED IN VERTICAL STACK BOND, FINISH FLOOR TO 4'-0"	RESTROOMS (WAINSCOT)	CREATIVE MATERIALS CORP.	WALL TILE	COLLECTION: URBAN SUBWAY COLOR: WHITE LINEAR DECO FINISH: MATTE GROUT COLOR: MAPEI 77 FROST	3" W X 10" L	https://www.creativematerialscorp.com/product/tune/	COMPANY: CREATIVE MATERIALS CORPORATION NAME: DOUG SALATINO P: 518-713-5371 C: 518-281-8264 E: DSALATINO@CREATIVEMATERIALSCORP.COM WWW.CREATIVEMATERIALSCORP.COM
T-4 ALT1	TILE	ALTERNATE TO T-4 PREP AND PRIME SURFACES PER MANUFACTURER'S RECOMMENDATIONS INSTALLED IN VERTICAL STACK BOND, FINISH FLOOR TO 4'-0"	RESTROOMS (WAINSCOT)	AUTOSTONE	WALL TILE	COLLECTION: STATION AMERICA-B COLOR: WHITE FINISH: MATTE GROUT COLOR: MAPEI 77 FROST	4" W X 16" L	https://autostoneusa.com/kia/	COMPANY: AUTOSTONE USA NAME: BARRY WELLS P: 214-830-1206 E: KIA@AUTOSTONEUSA.COM WWW.AUTOSTONEUSA.COM
T-4 ALT2	TILE	PREP AND PRIME SURFACES PER MANUFACTURER'S RECOMMENDATIONS INSTALLED IN VERTICAL STACK BOND, FINISH FLOOR TO 4'-0"	RESTROOMS (WAINSCOT)	DALTILE	WALL TILE	COLLECTION: STENCIL,LINEAR WALL TILE COLOR: WHITE SC32 FINISH: MATTE GROUT COLOR: MAPEI 77 FROST	4" W X 12" L	https://www.daltile.com/products/Monochromatic-Look/Stencil/White	COMPANY: DALTILE NAME: DAVID SANTIBANEZ M: 562-644-4360 E: DAVID.SANTIBANEZ@DALTILE.COM WWW.DALTILE.COM
T-5	TILE	PREP AND PRIME SURFACES PER MANUFACTURER'S RECOMMENDATIONS INSTALLED IN HORIZONTAL STACK BOND	TECH RESTROOMS	ROYAL MOSA	WALL TILE	COLOR: GLOBAL FINISH: MOUSE GRAY 16880 GROUT COLOR: MAPEI 27 SILVER	4" W X 12" L	https://www.mosa.com/en-us/products/collection/4x12	COMPANY: ROYAL MOSA NAME: NAN MCGINNIS P: 513-703-5801 WWW.MOSA.COM
T-5 ALT1	TILE	ALTERNATE TO T-5 PREP AND PRIME SURFACES PER MANUFACTURER'S RECOMMENDATIONS INSTALLED IN HORIZONTAL STACK BOND	TECH RESTROOMS	AUTOSTONE	CERAMIC TILE	COLLECTION: SHOP WALL! COLOR: STORMY GREY FINISH: GLOSSY GROUT COLOR: MAPEI 27 SILVER	12" W X 24" L	https://autostoneusa.com/kia/	COMPANY: AUTOSTONE USA NAME: BARRY WELLS P: 214-830-1206 E: KIA@AUTOSTONEUSA.COM WWW.AUTOSTONEUSA.COM
T-6	TILE	PREP AND PRIME SURFACES PER MANUFACTURER'S RECOMMENDATIONS INSTALLED IN HORIZONTAL STACK BOND	OPTIONAL NEW VEHICLE DELIVERY, SERVICE RECEPTION DRIVE LANES	AUTOSTONE	TILE	COLLECTION: DRIVE SERIES COLOR: ALLOY GREY SURFACE:R-12 TEXTURED GROUT COLOR: MAPEI 27 SILVER	8" W X 8" L	https://autostoneusa.com/kia/	COMPANY: AUTOSTONE USA NAME: BARRY WELLS P: 214-830-1206 E: KIA@AUTOSTONEUSA.COM WWW.AUTOSTONEUSA.COM
T-7	TILE	PREP AND PRIME SURFACES PER MANUFACTURER'S RECOMMENDATIONS INSTALLED IN HORIZONTAL STACK BOND	OPTIONAL SERVICE RECEPTION DRIVE LANES	AUTOSTONE	TILE	COLLECTION: DRIVE SERIES COLOR:CARBON BLACK SURFACE:R-12 TEXTURED GROUT COLOR: MAPEI 27 SILVER	8" W X 8" L	https://autostoneusa.com/kia/	COMPANY: AUTOSTONE USA NAME: BARRY WELLS P: 214-830-1206 E: KIA@AUTOSTONEUSA.COM WWW.AUTOSTONEUSA.COM
TS-1	TRANSITION STRIP	CONTRACTOR TO COORDINATE ALL ADDITIONAL PARTS AND SYSTEMS THAT ARE RECOMMENDED BY THE MANUFACTURER TO COMPLETE INSTALL	WALL BASE RESTROOMS	SCHLUTER	DILEX-AHK	FINISH: SATIN ANODIZED	REFERENCE CONSTRUCTION DOCUMENTS	https://www.schluter.com/schluter-us/en_US/Profiles/Cove-shaped-Profiles/Schluter%-DILEX-AHK/p/DILEX_AHK?facets=false	COMPANY: SCHLUTER SYSTEM NAME: LANCE BEARMAN P: 888-472-4588 M: 502-264-1199 E: LBEARMAN@SCHLUTER.COM WWW.SCHLUTER.COM
TS-2	TRANSITION STRIP	CONTRACTOR TO COORDINATE ALL ADDITIONAL PARTS AND SYSTEMS THAT ARE RECOMMENDED BY THE MANUFACTURER TO COMPLETE INSTALL	BETWEEN T-3 AND T-4 IN RESTROOMS	SCHLUTER	SCHIENE	FINISH: SATIN ANODIZED	REFERENCE CONSTRUCTION DOCUMENTS	https://www.schluter.com/schluter-us/en_US/Profiles/For-Floors/Same-height-Transitions/Schluter%C2%AE-SCHIENE/p/SCHIENE	COMPANY: SCHLUTER SYSTEM NAME: LANCE BEARMAN P: 888-472-4588 M: 502-264-1199 E: LBEARMAN@SCHLUTER.COM WWW.SCHLUTER.COM
TS-3	TRANSITION STRIP	CONTRACTOR TO COORDINATE ALL ADDITIONAL PARTS AND SYSTEMS THAT ARE RECOMMENDED BY THE MANUFACTURER TO COMPLETE INSTALL	NVD	SCHLUTER	RENO-T	FINISH: SATIN ANODIZED	1"	https://www.schluter.com/schluter-us/en_US/Profiles/For-Floors/Same-height-Transitions/Schluter%C2%AE-RENO-T/p/RENO_T	COMPANY: SCHLUTER SYSTEM NAME: LANCE BEARMAN P: 888-472-4588 M: 502-264-1199 E: LBEARMAN@SCHLUTER.COM WWW.SCHLUTER.COM
WB-1	WALL BASE	PREP AND PRIME SURFACES PER MANUFACTURER'S RECOMMENDATIONS	ROOMS WITH T-2	CREATIVE MATERIALS CORP.	CERAMIC TILE - CUT TO 4" WITH SCHLUTER SCHIENE CAP (CLEAR ANODIZED)	COLLECTION: INYO COLOR: GOLD FINISH: MATTE GROUT COLOR: MAPEI 108 BAMBOO	4" H X 48" L	https://www.creativematerialscorp.com/product/inyo/	COMPANY: CREATIVE MATERIALS CORPORATION NAME: DOUG SALATINO P: 518-713-5371 C: 518-281-8264 E: DSALATINO@CREATIVEMATERIALSCORP.COM WWW.CREATIVEMATERIALSCORP.COM
WB-2	WALL BASE	N/A	ROOMS WITH CO-1	TARKETT	TRADITIONAL VINYL 4-1/8" TOELESS (TYPE TV)	COLOR: TAS COLONIAL GRAY	0.125" D X 4" H X 48" L	https://commercial.tarkett.com/en_US/collection<C000494-traditional-vinyl-1:8-type-tv	COMPANY: TARKETT NAME: ERIN RINK P: 513-504-5734 E: ERIN.RINK@TARKETT.COM WWW.TARKETT.COM
WB-3	WALL BASE	N/A	ROOMS WITH CPT-1	TARKETT	TRADITIONAL VINYL 4-1/8" TOELESS (TYPE TV)	COLOR: 40 BLACK	0.125" D X 4" H X 48" L	https://commercial.tarkett.com/en_US/collection<C000494-traditional-vinyl-1:8-type-tv	COMPANY: TARKETT NAME: ERIN RINK P: 513-504-5734 E: ERIN.RINK@TARKETT.COM WWW.TARKETT.COM
WB-4	WALL BASE	SPECIFICATION INTENDED FOR DESIGN INTENT ONLY	ROOMS WITH LVT-1	HOME DEPOT	FINISHED ELEGANCE MDF MOULDING BOARD	P-6 U.N.O. SEE INTERIOR ELEVATIONS	1" D X 3" H X 96" L	N/A	COMPANY: THE HOME DEPOT NAME: CUSTOMER SERVICE P: 800-466-3337 WWW.HOMEDEPOT.COM
WC-1	WALLCOVERING	PREP AND PRIME SURFACES PER MANUFACTURER'S RECOMMENDATIONS DRYWALL SUBSTRATE TO BE FINISHED IN A LEVEL 5 FINISH STRAIGHT HANG, RANDOM MATCH, VERTICAL GRAIN	SHOWROOM, VEHICLE DELIVERY (VDC) / PHOTO BOOTH	MOMENTUM	WOODS WALLCOVERING	COLOR: SWS-54 RED OAK	36" W	https://www.momentumtextilesandwalls.com/09305525/p	COMPANY: MOMENTUM TEXTILES & WALLCOVERING NAME: AMBER GAINES P: 800-366-6839 x819 E: AGAINES@MOMTEX.COM WWW.MEMOSAMPLES.COM
WC-1 ALT1	WALLCOVERING	PREP AND PRIME SURFACES PER MANUFACTURER'S RECOMMENDATIONS DRYWALL SUBSTRATE TO BE FINISHED IN A LEVEL 5 FINISH STRAIGHT HANG, RANDOM MATCH, VERTICAL GRAIN	SHOWROOM, VEHICLE DELIVERY (VDC) / PHOTO BOOTH	KOROSEAL	TIMBERLAND WALLCOVERING	COLOR: T122-16 WHITE OAK	36" W	https://koroseal.com/products/wallcoverings/timberline/white-oak	COMPANY: KOROSEAL COMMERCIAL WALLCOVERINGS NAME: CUSTOMER SERVICE P: 855-753-5474 WWW.KOROSEAL.COM

TDI ASSOCIATES, INC.
ARCHITECTURE & PLANNING

25217 SOUTH WIND LAKE ROAD
WIND LAKE, WISCONSIN 53185
PHONE 262-409-2530

PROFESSIONAL CONSULTANTS, INC.

300 COTTONWOOD AVE # 7
HARTLAND, WISCONSIN 53029
(262) 367-6080

RUSS DARROW KIA OF WAUKESHA

2141 EAST MORELAND BLVD
WAUKESHA, WISCONSIN

TDI ASSOCIATES, INC
All Rights Reserved

OWNERSHIP OF DOCUMENTS

This document, and the ideas and design incorporated herein, as an instrument of professional service, is the sole property of TDI Associates, Inc., and is not to be used in whole or in part for any other project or purpose without the expressed written authorization of TDI Associates, Inc.

Sheet Title
INTERIOR FINISH SCHEDULE

Issued For: - Date: -

Date: 07-25-2024

Job NO.: 24103.000

Drawn By: LCC

Sheet No.
A4.3

DRAWING NOTES

1. OFFICE FURNISHINGS LAYOUT BY OWNER. ITEMS CAN BE SELECTED FROM SPECIFIED FURNITURE SYSTEM. REFER TO FURNITURE SCHEDULE ON SHEET A-3B.
2. CUSTOMER SERVICE VISIBLE COUNTERTOP, FINISHES TO BE SS-1.
3. STAINLESS STEEL COUNTER FOR BACK OF HOUSE SERVICE AREAS.
4. RECOMMENDED FOLIAGE / PLANTS LOCATIONS, THESE ITEMS TO BE COORDINATED AND PROVIDED BY THE OWNER.
5. ADA COMPLIANT CHAIR(S) TO CORRESPOND WITH ADA COMPLIANT DESK(S).
6. SEE SHEET A-4.1 FOR FLOOR FINISHES TRANSITION NOTES.
7. PROVIDE POWER/DATA AS NEEDED AT FIXTURE, MONITOR LOCATION.
8. GF-1 SAFETY/PRIVACY FILM TO BE APPLIED TO INTERIOR GLAZING.
9. REFER TO SHEET GPP-1 FOR ALL INTERIOR GRAPHIC LOCATIONS.
10. ALIGN WITH FACE OF EXISTING CONSTRUCTION.
11. VEHICLE LOCATIONS - MAINTAIN LOCATION
12. ABOVE-GROUND LIFT FOR DESIGNATED EV SERVICE STALL.
13. STALL ADJACENT TO EV SERVICE STALL SHALL REMAIN FREE OF VEHICLE LIFT.
14. INSTALL EV CHARGING STATION; ONE FAST CHARGER (MIN. 24KW), OR ONE LEVEL 2 CHARGER.

LEGEND

#	NOTE DESIGNATOR - REFER TO DRAWING NOTES ON THIS SHEET
FX-#	FIXTURE ITEM - REFER TO "FX" SHEETS (NOTE: DCI MARKING WILL BE THE EXCLUSIVE PROVIDE FOR PROGRAM FINISHES)
FN-#	FURNITURE ITEM - REFER TO A-3A.1 AND A-3A.2 SHEETS

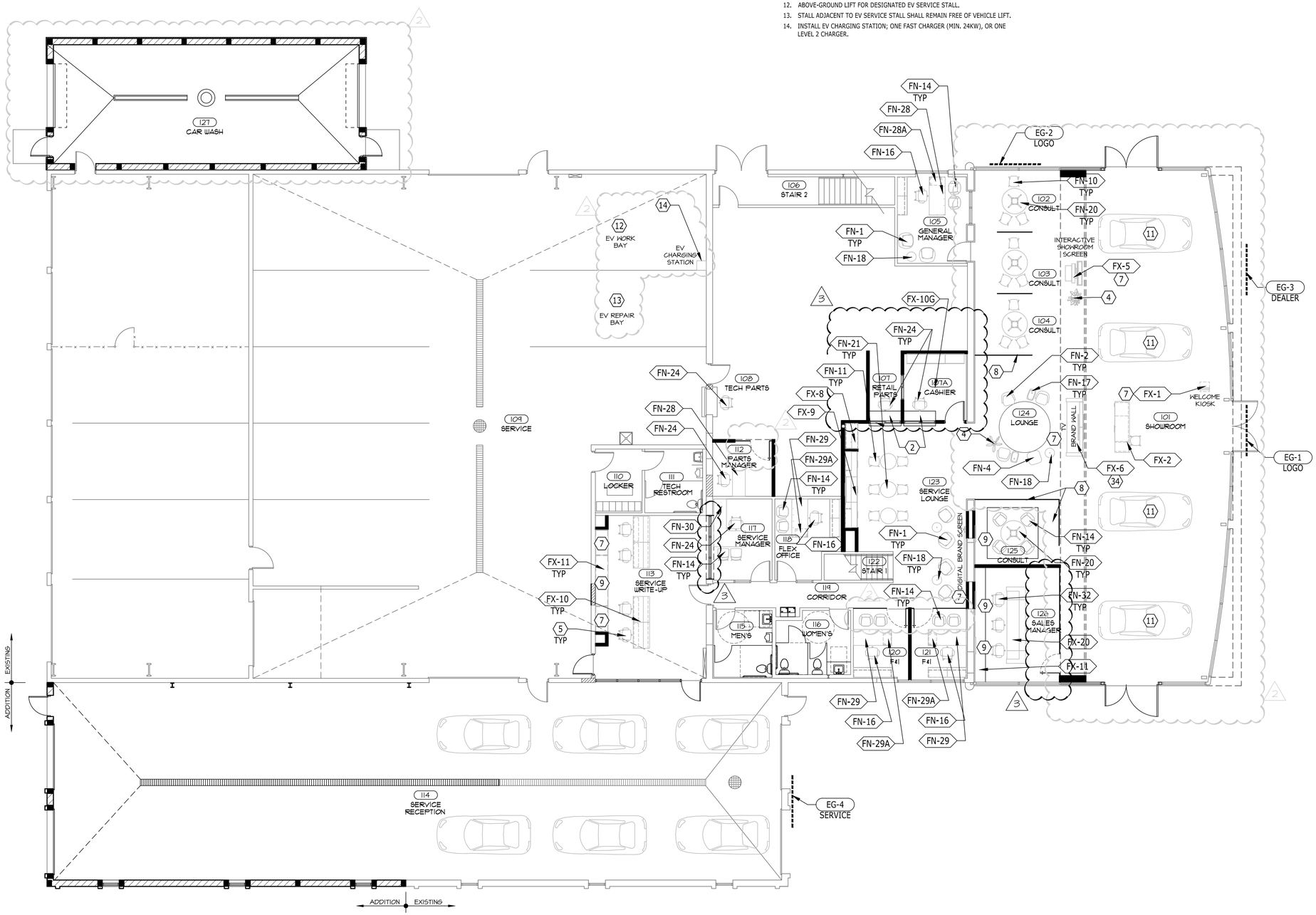

1 FURNITURE & FIXTURE PLAN
1/8"=1'-0"

TDI ASSOCIATES, INC.
ARCHITECTURE & PLANNING

25217 SOUTH WIND LAKE ROAD
WIND LAKE, WISCONSIN 53185
PHONE 262-409-2530

PROFESSIONAL CONSULTANTS, INC.
300 COTTONWOOD AVE # 7
HARTLAND, WISCONSIN 53029
(262) 367-6080

RUSS DARROW KIA OF WAUKESHA
2141 EAST MORELAND BLVD
WAUKESHA, WISCONSIN

TDI ASSOCIATES, INC
All Rights Reserved

OWNERSHIP OF DOCUMENTS

This document, and the ideas and design incorporated herein, as an instrument of professional service, is the sole property of TDI Associates, Inc., and is not to be used in whole or in part for any other project or purpose without the expressed written authorization of TDI Associates, Inc.

Sheet Title
FURNITURE & FIXTURE PLAN

Issued For:	Date:
REV #2	06-27-2025
REV #3	08-06-2025

Date:	07-25-2024
Job NO.:	24103.000
Drawn By:	LCC

Sheet No.
A4.4

FURNITURE SCHEDULE

CODE	MATERIAL	NOTES	MANUFACTURER	PRODUCT
FN-1	FURNITURE	CONTRACTOR TO WORK WITH DEALER TO PROVIDE ALL NECESSARY PIECES AND PARTS REQUIRED FOR ASSEMBLY	HAWORTH	POPPY LOUNGE CHAIR BASE:FOUR LEG ARRAY
FN-2	FURNITURE	CONTRACTOR TO WORK WITH DEALER TO PROVIDE ALL NECESSARY PIECES AND PARTS REQUIRED FOR ASSEMBLY	HAWORTH	OPENEST CHICK POUF, WITH UPHOLSTERED BACK
FN-3	FURNITURE	CONTRACTOR TO WORK WITH DEALER TO PROVIDE ALL NECESSARY PIECES AND PARTS REQUIRED FOR ASSEMBLY	HAWORTH	OPENEST CHICK POUF, BACKLESS
FN-4	FURNITURE	CONTRACTOR TO WORK WITH DEALER TO PROVIDE ALL NECESSARY PIECES AND PARTS REQUIRED FOR ASSEMBLY	HAWORTH	OPENEST CHICK POUF, BACKLESS
FN-5	FURNITURE	CONTRACTOR TO WORK WITH DEALER TO PROVIDE ALL NECESSARY PIECES AND PARTS REQUIRED FOR ASSEMBLY	HAWORTH	OPENEST CHICK POUF, ROUND
FN-7	FURNITURE	CONTRACTOR TO WORK WITH DEALER TO PROVIDE ALL NECESSARY PIECES AND PARTS REQUIRED FOR ASSEMBLY	HAWORTH	HOBO SOFA 2-SEAT, RIGHT ARM CONFIGURATION
FN-8	FURNITURE	CONTRACTOR TO WORK WITH DEALER TO PROVIDE ALL NECESSARY PIECES AND PARTS REQUIRED FOR ASSEMBLY	HAWORTH	HOBO SOFA BENCH 2-SEAT CONFIGURATION LEFT ARM ORIENTATION
FN-9	FURNITURE	CONTRACTOR TO WORK WITH DEALER TO PROVIDE ALL NECESSARY PIECES AND PARTS REQUIRED FOR ASSEMBLY	HAWORTH	CABANA LOUNGE ISLAND MID FULL BACK POWERED: FOUR OUTLETS(OPTIONAL), TWO USB SINGLE SURFACE
FN-10	FURNITURE	CONTRACTOR TO WORK WITH DEALER TO PROVIDE ALL NECESSARY PIECES AND PARTS REQUIRED FOR ASSEMBLY	HAWORTH	MAARI SIDE CHAIR
FN-11	FURNITURE	CONTRACTOR TO WORK WITH DEALER TO PROVIDE ALL NECESSARY PIECES AND PARTS REQUIRED FOR ASSEMBLY	HAWORTH	MAARI SIDE CHAIR
FN-12	FURNITURE	CONTRACTOR TO WORK WITH DEALER TO PROVIDE ALL NECESSARY PIECES AND PARTS REQUIRED FOR ASSEMBLY	HAWORTH	MAARI LOW BACK BAR HEIGHT STOOL
FN-13	FURNITURE	CONTRACTOR TO WORK WITH DEALER TO PROVIDE ALL NECESSARY PIECES AND PARTS REQUIRED FOR ASSEMBLY	HAWORTH	MAARI LOW BACK BAR HEIGHT STOOL
FN-14	FURNITURE	CONTRACTOR TO WORK WITH DEALER TO PROVIDE ALL NECESSARY PIECES AND PARTS REQUIRED FOR ASSEMBLY	HAWORTH	POPPY GUEST CHAIR
FN-15	FURNITURE	CONTRACTOR TO WORK WITH DEALER TO PROVIDE ALL NECESSARY PIECES AND PARTS REQUIRED FOR ASSEMBLY	HAWORTH	LOTUS CHAIR LOW BACK, FIXED ARMS
FN-16	FURNITURE	CONTRACTOR TO WORK WITH DEALER TO PROVIDE ALL NECESSARY PIECES AND PARTS REQUIRED FOR ASSEMBLY	HAWORTH	LOTUS CHAIR HIGH FULL BACK, FIXED ARMS
FN-17	FURNITURE	CONTRACTOR TO WORK WITH DEALER TO PROVIDE ALL NECESSARY PIECES AND PARTS REQUIRED FOR ASSEMBLY	HAWORTH	PIP PERSONAL LAPTOP TABLE
FN-18	FURNITURE	CONTRACTOR TO WORK WITH DEALER TO PROVIDE ALL NECESSARY PIECES AND PARTS REQUIRED FOR ASSEMBLY	HAWORTH	GONG SIDE TABLE
FN-19	FURNITURE	CONTRACTOR TO WORK WITH DEALER TO PROVIDE ALL NECESSARY PIECES AND PARTS REQUIRED FOR ASSEMBLY	HAWORTH	PLANES SIDE TABLE KNIFE EDGE DISC BASE
FN-20	FURNITURE	CONTRACTOR TO WORK WITH DEALER TO PROVIDE ALL NECESSARY PIECES AND PARTS REQUIRED FOR ASSEMBLY	HAWORTH	IMMERSE SINGLE TABLE FOUR LEG BASE,NO POWER

CODE	MATERIAL	NOTES	MANUFACTURER	PRODUCT
FN-21	FURNITURE	CONTRACTOR TO WORK WITH DEALER TO PROVIDE ALL NECESSARY PIECES AND PARTS REQUIRED FOR ASSEMBLY	HAWORTH	PLANES TABLE, DINE HEIGHT KNIFE EDGE DISC BASE
FN-24	FURNITURE	CONTRACTOR TO WORK WITH DEALER TO PROVIDE ALL NECESSARY PIECES AND PARTS REQUIRED FOR ASSEMBLY	HAWORTH	HAWORTH VERY TASK CHAIR
FN-25	FURNITURE	DEALER TO COORDINATE DESKING REQUIREMENTS WITH FURNITURE MANUFACTURER FOR EXACT SPECIFICATIONS	HAWORTH	TRAINING TABLE
FN-27	FURNITURE	CONTRACTOR TO WORK WITH DEALER TO PROVIDE ALL NECESSARY PIECES AND PARTS REQUIRED FOR ASSEMBLY	FROVI	RELIC CREDENZA HIGH
FN-28	FURNITURE	DEALER TO COORDINATE DESKING REQUIREMENTS WITH FURNITURE MANUFACTURER FOR EXACT SPECIFICATIONS	HAWORTH	X SERIES SINGLE PEDESTAL DESK PRODUCT # JDSL-2460-JFALBN RIGHT HAND ORIENTATION 1/3 HEIGHT MODESTY PANEL HEIGHT CABLE MANAGEMENT: NO SCALLOP
FN-28A	FURNITURE	DEALER TO COORDINATE DESKING REQUIREMENTS WITH FURNITURE MANUFACTURER FOR EXACT SPECIFICATIONS	HAWORTH	X SERIES PEDESTAL PRODUCT # JPAH-24-L3 LAMINATE FRONT/PAINTED STEEL LOCKBAR PULL STYLE: TAPER
FN-29	FURNITURE	DEALER TO COORDINATE DESKING REQUIREMENTS WITH FURNITURE MANUFACTURER FOR EXACT SPECIFICATIONS	HAWORTH	X SERIES DESK SHELLS STANDARD RECTANGULAR DESK SHELL - LAMINATE TOP WITH LAMINATE END PANELS PRODUCT #: JDSL-3072-JFFLBN 1/3 MODESTY PANEL HEIGHT CABLE MANAGEMENT: NO SCALLOP
FN-29A	FURNITURE	DEALER TO COORDINATE DESKING REQUIREMENTS WITH FURNITURE MANUFACTURER FOR EXACT SPECIFICATIONS	HAWORTH	X SERIES MOBILE PEDESTAL PRODUCT #: JPMP-24S3 PAINTED STEEL FRONTS AND LOCKBAR PULL STYLE: TAPER
FN-30	FURNITURE	DEALER TO COORDINATE DESKING REQUIREMENTS WITH FURNITURE MANUFACTURER FOR EXACT SPECIFICATIONS	HAWORTH	X SERIES CONVERGENTS - CURVED WRAP AROUND D-TOP LAMINATE TOP WITH COLUMN AND LAMINATE END PANELS PRODUCT #: JDVL-3660-JDL-LBN4 LEFT-HAND ORIENTATION 1/3 MODESTY PANEL HEIGHT CABLE MANAGEMENT: NO SCALLOP ADJOINING SURFACE DEPTH: 24"
FN-30A	FURNITURE	DEALER TO COORDINATE DESKING REQUIREMENTS WITH FURNITURE MANUFACTURER FOR EXACT SPECIFICATIONS NOTE: TO BE USED WITH FN-30	HAWORTH	X SERIES RETURN - LAMINATE TOP WITH LAMINATE END PANEL PRODUCT #: JDRL-2466-JNFLBNS RIGHT-HAND ORIENTATION 1/3 MODESTY PANEL HEIGHT CABLE MANAGEMENT: NO SCALLOP
FN-30B	FURNITURE	DEALER TO COORDINATE DESKING REQUIREMENTS WITH FURNITURE MANUFACTURER FOR EXACT SPECIFICATIONS NOTE: TO BE USED WITH FN-30A	HAWORTH	X SERIES VERTICAL STORAGE UNITS PRODUCT #: JUFL-3366-LL FLIPPER DOOR VERTICAL STORAGE UNIT LAMINATE FRONT WITH LAMINATE END PANELS
FN-31	FURNITURE	DEALER TO COORDINATE DESKING REQUIREMENTS WITH FURNITURE MANUFACTURER FOR EXACT SPECIFICATIONS NOTE: PIECE IS CREATED USING 2 QUANTITY	HAWORTH	X SERIES FREESTANDING 2H LATERAL FILE PROUD STYLES PRODUCT #: JLPD-0236-LJ LAMINATE FRONTS/PAINTED STEEL LOCKBAR
FN-31A	FURNITURE	DEALER TO COORDINATE DESKING REQUIREMENTS WITH FURNITURE MANUFACTURER FOR EXACT SPECIFICATIONS MUST USED WITH FN-31	HAWORTH	X SERIES LATERAL FILE LAMINATE TOPS FOR USE WITH PROUD STYLE FRONTS PRODUCT #: JTPL-1872-JYJYS
FN-32	FURNITURE	DEALER TO COORDINATE DESKING REQUIREMENTS WITH FURNITURE MANUFACTURER FOR EXACT SPECIFICATIONS MUST USED WITH FN-31	HAWORTH	X SERIES LATERAL FILE LAMINATE TOPS FOR USE WITH PROUD STYLE FRONTS PRODUCT #: JTPL-1872-JYJYS
PART-1	PARTITION	CONTRACTOR TO COORDINATE ALL ADDITIONAL PARTS AND SYSTEMS THAT ARE RECOMMENDED BY THE MANUFACTURER TO COMPLETE INSTALL.	HAWORTH	ENCLOSE OFFICE SYSTEMS
PART-2	PARTITION	CONTRACTOR TO COORDINATE ALL ADDITIONAL PARTS AND SYSTEMS THAT ARE RECOMMENDED BY THE MANUFACTURER TO COMPLETE INSTALL.	HAWORTH	ENCLOSE OFFICE SYSTEMS

MANUFACTURER CONTACT

COMPANY: HAWORTH
NAME: LESLIE LEVINSKI
PHONE: N/A
MOBILE: 949-424-9340
EMAIL: LESLIE.LEVINSKI@HAWORTH.COM
WEBSITE: WWW.HAWORTH.COM

TDI ASSOCIATES, INC.
ARCHITECTURE & PLANNING

25217 SOUTH WIND LAKE ROAD
WIND LAKE, WISCONSIN 53185
PHONE 262-409-2530

PROFESSIONAL CONSULTANTS, INC.
300 COTTONWOOD AVE # 7
HARTLAND, WISCONSIN 53029
(262) 367-6080

RUSS DARROW
KIA OF WAUKESHA

2141 EAST MORELAND BLVD
WAUKESHA, WISCONSIN

TDI ASSOCIATES, INC
All Rights Reserved

OWNERSHIP OF DOCUMENTS

This document, and the ideas and design incorporated herein, as an instrument of professional service, is the sole property of TDI Associates, Inc., and is not to be used in whole or in part for any other project or purpose without the expressed written authorization of TDI Associates, Inc.

Sheet Title
FURNITURE SCHEDULE

Issued For: Date:
- -

Date: 07-25-2024
Job NO.: 24103.000
Drawn By: LCC
Sheet No.
A4.5

FIXTURE SCHEDULE

CODE	ITEM	NOTES	LOCATION	MANUFACTURER	PRODUCT	FINISH/COLOR	DIMENSION	WEBSITE	MANUFACTURER REPRESENTATIVE CONTACT INFORMATION
EQUIP-1	FAUCET	CONTRACTOR RESPONSIBLE FOR SPECIFYING AND ORDERING ALL PARTS TO COMPLETE INSTALL. CONTRACTOR RESPONSIBLE FOR SELECTING AC OR DC POWER OPTION ADA COMPLIANT	RESTROOMS	SLOAN	OPTIMA HARDWIRED-POWERED DECK-MOUNTED LOW BODY FAUCET MODEL: ETF-410-FLG-TEE-GR-0.5GPM-MLM IR-FCT CODE: 3368038T COMMERCIAL GRADE FAUCET, ADA COMPLIANT, INTEGRATED WATER SHUT-OFF, WIRELESS SETTINGS ADJUSTMENT, SELF-ADAPTING SENSOR	FINISH: GRAPHITE	N/A	https://www.sloan.com/commercial-bathroom-products/faucets/optima/etf-410?variation_finish=Graphite	COMPANY: SLOAN NAME: CUSTOMER SERVICE P: 847-671-4300 E: CUSTOMER.SERVICE@SLOAN.COM WWW.SLOAN.COM
EQUIP-2	SOAP DISPENSER	TO BE MOUNTED AT REQUIRED ADA HEIGHT ADA COMPLIANT	RESTROOMS	SLOAN	DECK-MOUNTED FOAM SOAP DISPENSER MODEL: ESD-410-GR CODE: 3346161	FINISH:GRAPHITE	N/A	https://www.sloan.com/commercial-bathroom-products/soap-dispensers/sloan/esd-410?variation_finish=Graphite	COMPANY: SLOAN NAME: CUSTOMER SERVICE P: 847-671-4300 E: CUSTOMER.SERVICE@SLOAN.COM WWW.SLOAN.COM
EQUIP-3	HAND DRYER	TO BE MOUNTED AT REQUIRED ADA HEIGHT ADA COMPLIANT	RESTROOMS	EXCEL DRYER	XLERATOR HAND DRYER	FINISH:XL-GR GRAPHITE TEXTURED PAINTED COVER	6-11/16"D X 11-3/4"W X 12-11/16"H	https://www.exceldryer.com/product/xlerator-hand-dryer/	COMPANY: EXCEL DRYER NAME: CUSTOMER SERVICE P: 888-998-7704 E: SALES@EXCELDRYER.COM WWW.EXCELDRYER.COM
EQUIP-4	TOWEL DISPENSER	CONTRACTOR RESPONSIBLE FOR COORDINATING WITH MANUFACTURER ALL PARTS AND PIECES THAT ARE NEEDED FOR PROPER INSTALLATION	RESTROOMS	AMERICAN SPECIALTIES, INC.	PIATTO COMPLETELY RECESSED PAPER TOWEL DISPENSER AND WASTE RECEPTACLE MODEL: 64623-41	COLOR: MATTE BLACK PHENOLIC DOOR	FINISHED WALL OPENING (FWO): 4-11/16"D X 28-1/16"H X 14-5/16"W UNIT SIZE: 4-9/16"D X 28"H X 14-1/4"W	https://americanspecialties.com/product/piatto-completely-recessed-paper-towel-dispenser-and-waste-receptacle-matte-black-phenolic-door-64623-41/	COMPANY: AMERICAN SPECIALTIES, INC. NAME:CUSTOMER SERVICE P:914-476-0688 WWW.AMERICANSPECIALTIES.COM
EQUIP-5	GRAB BAR	TO BE MOUNTED AT REQUIRED ADA HEIGHT ADA COMPLIANT	RESTROOMS	KOHLER	KUMIN GRAB BAR	COLOR: MATTE BLACK	AOR TO CONFIRM REQUIRED DIMENSION(S) REQUIRED.	https://www.us.kohler.com/us/kumin-42-grab-bar/productDetail/accessories-grab-bars/1604912.htm?skuId=1604853&brandId=1787392	COMPANY: KOHLER NAME:CUSTOMER SERVICE P:800-456-4537 WWW.US.KOHLER.COM
EQUIP-6	TOILET TISSUE DISPENSER	TO BE MOUNTED AT REQUIRED ADA HEIGHT ADA COMPLIANT	RESTROOMS	KOHLER	WALL MOUNTED TOILET TISSUE DISPENSER MODEL: K-78384-BL	COLOR: MATTE BLACK	6-1/4"D X 4-1/4"H X 12"W	https://www.kohler.com/en/products/bathroom-accessories/shop-bathroom-accessories/components-covered-double-toilet-tissue-holder-78384?skuId=78384-BL	COMPANY: KOHLER NAME:CUSTOMER SERVICE P:800-456-4537 WWW.US.KOHLER.COM
EQUIP-7	SANITARY NAPKIN RECEPTACLE	TO BE MOUNTED AT REQUIRED ADA HEIGHT ADA COMPLIANT	RESTROOMS	BOBRICK	WALL MOUNTED TOILET TISSUE DISPENSER MODEL: K-78384-BL	COLOR: MATTE BLACK	4-1/2"D X 14-1/8"H X 8-1/16"W	https://www.bobrick.com/products/washroom-accessories/toilet-compartment-accessories/toilet-compartment-catalog/sanitary-napkin-disposals/product/b-35139-mblk/	COMPANY: BOBRICK NAME: CUSTOMER SERVICE P: 818-982-9600 E: SALES@EVERUE.COM WWW.BOBRICK.COM
EQUIP-8	LIGHTED MIRROR	TO BE MOUNTED AT REQUIRED ADA HEIGHT THIS ITEM REQUIRES ELECTRIC - ARCHITECT OF RECORD TO COORDINATE APPROPRIATE ELECTRICAL NEEDS	RESTROOMS	GRAND MIRRORS	GRAND MIRRORS ECLIPSE BACK LIGHTED / ROUNDED CORNERS LED LIGHT: PHILLIPS LED LIGHT LED LIGHT TEMPERATURE: PHILIPS MID-WARM LIGHT (4000K)	FINISH: BRUSHED STAINLESS	60"H X 36"W	https://grandmirrors.com/eclipse/	COMPANY: GRAND MIRRORS NAME:CUSTOMER SERVICE P:949-441-4262 M:SALES@EVERUE.COM WWW.GRANDMIRRORS.COM
EQUIP-9	BABY CHANGING STATION	TO BE MOUNTED AT REQUIRED ADA HEIGHT	RESTROOMS	KOALA	HORIZONTAL STAINLESS STEEL SURFACE-MOUNTED KB310-SSWM	FINISH: MATTE BLACK	6-25/32"D X 26-11/32"H X 41-15/32"W EXTENSION: 21-1/4"D	https://www.koalabear.com/product-catalog/kb310-sswm/	COMPANY: GRAND MIRRORS NAME:CUSTOMER SERVICE P:949-441-4262 M:SALES@EVERUE.COM WWW.GRANDMIRRORS.COM
EQUIP-10	UNDERMOUNT SINK	TO BE MOUNTED AT REQUIRED ADA HEIGHT	RESTROOMS	TOTO	UNDERCOUNTER LAVATORY LT191(G)	FINISH: STANDARD WHITE	23-3/4"W X 14-3/8"D	https://www.totousa.com/undercounter-lavatory-lt191g	COMPANY: TOTO NAME:CUSTOMER SERVICE P:1-888-295-8134 E: CUSTSERVICE@TOTO.COM WWW.TOTOUSA.COM/

TDI ASSOCIATES, INC.
ARCHITECTURE & PLANNING

25217 SOUTH WIND LAKE ROAD
WIND LAKE, WISCONSIN 53185
PHONE 262-409-2530

PROFESSIONAL CONSULTANTS, INC.
300 COTTONWOOD AVE # 7
HARTLAND, WISCONSIN 53029
(262) 367-6080

RUSS DARROW
KIA OF WAUKESHA

2141 EAST MORELAND BLVD
WAUKESHA, WISCONSIN

TDI ASSOCIATES, INC
All Rights Reserved

OWNERSHIP OF DOCUMENTS

This document, and the ideas and design incorporated herein, as an instrument of professional service, is the sole property of TDI Associates, Inc., and is not to be used in whole or in part for any other project or purpose without the expressed written authorization of TDI Associates, Inc.

Sheet Title
FIXTURE SCHEDULE

Issued For: Date:
- -

Date: 07-25-2024
Job NO.: 24103.000
Drawn By: LCC
Sheet No.
A4.6

LEGEND

?-# / ?-# / ?-#	CEILING NOTE DESIGNATOR - REFER TO NOTES IN THIS SHEET FINISH DESIGNATOR - REFER TO INTERIOR FINISH SCHEDULE CEILING HEIGHT DESIGNATOR
#	LIGHT FIXTURE TYPE
OPEN	OPEN TO NEW OR EXISTING STRUCTURE
ACT-1 ACT 2'X4'	
ACT-2 ACT 4'X6'	

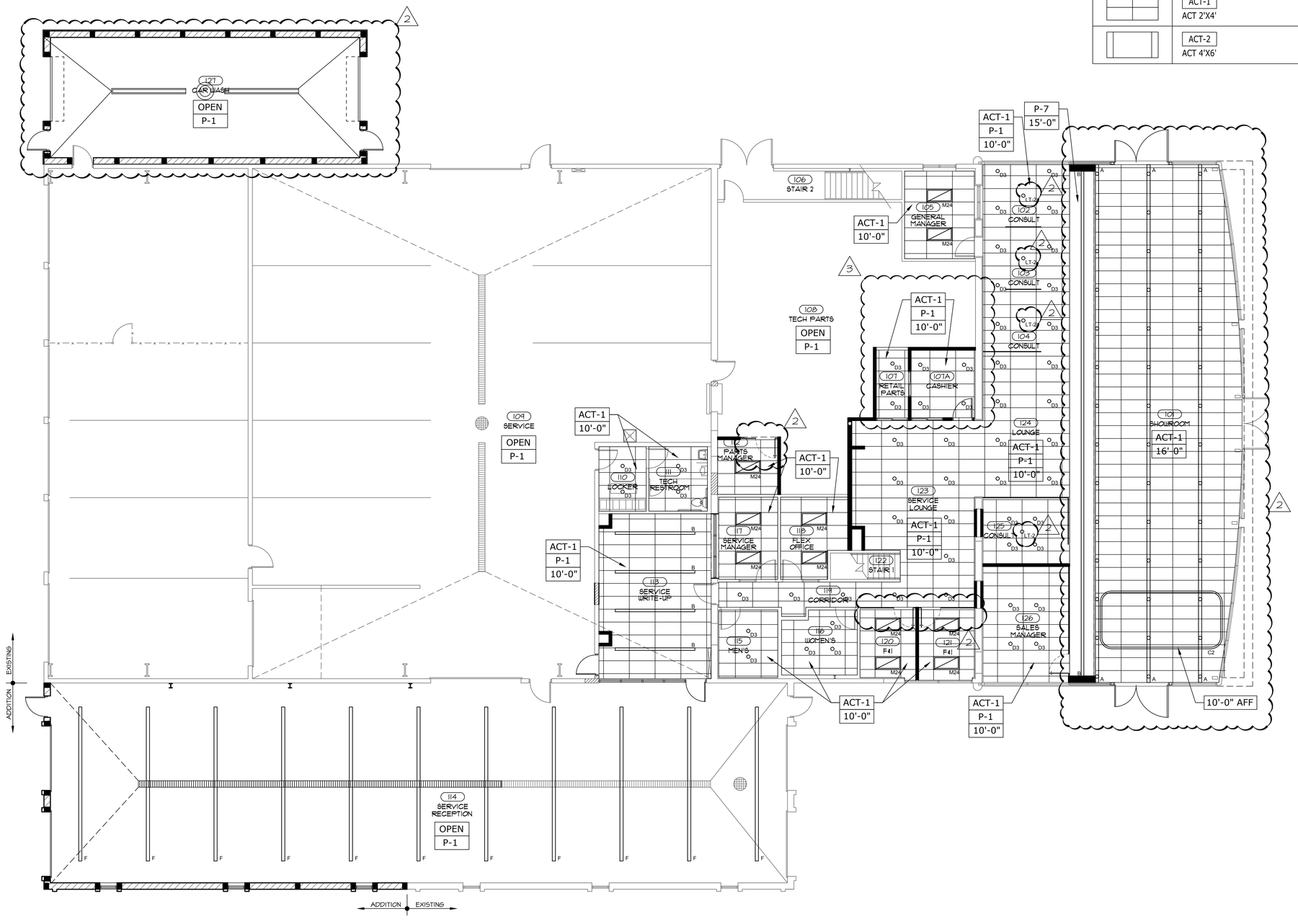

1 REFLECTED CEILING PLAN

1/8"=1'-0"

NORTH

TDI ASSOCIATES, INC.
ARCHITECTURE & PLANNING

25217 SOUTH WIND LAKE ROAD
WIND LAKE, WISCONSIN 53185
PHONE 262-409-2530

PROFESSIONAL CONSULTANTS, INC.
300 COTTONWOOD AVE # 7
HARTLAND, WISCONSIN 53029
(262) 367-6080

RUSS DARROW KIA OF WAUKESHA

2141 EAST MORELAND BLVD
WAUKESHA, WISCONSIN

TDI ASSOCIATES, INC
All Rights Reserved

OWNERSHIP OF DOCUMENTS

This document, and the ideas and design incorporated herein, as an instrument of professional service, is the sole property of TDI Associates, Inc., and is not to be used in whole or in part for any other project or purpose without the expressed written authorization of TDI Associates, Inc.

Sheet Title
REFLECTED CEILING PLAN

Issued For:	Date:
REV #2	06-27-2025
REV #3	08-06-2025

Date:	07-25-2024
Job NO.:	24103.000
Drawn By:	LCC

Sheet No.
A6.1

KIA 2023 CBS LIGHTING SCHEDULE

TYPE	IMAGE	DESCRIPTION	MOUNTING	MANUFACTURER	SERIES	LOCATION	COLOR	FINISH	APPROX. SIZE	CAT. NO.	LED	SUSPENDED HEIGHT	NOTES
A		SPOTLIGHT IN CHANNEL	RECESS	ALW	LPSR	SHOWROOM	BLACK	TB - TEXTURED MATTE BLACK POWDERCOAT	5" DIA.	LPSRMUD-DRY-S-NONE-DL2500/90/4000/40-N-*-TB	2500 LUMENS W/ 4000K 92 CRI	N/A	COORDINATE CEILING CONDITIONS WITH MANUFACTURER PRIOR TO ORDER
B		LINEAR	RECESS	LEDALITE	TRUGROOVE RECESSED MICRO	VARIOUS GYP CEILINGS	WHITE	N/A	1.75" x LENGTH PER PLANS	230 1 L 940 30 Q S 3 XX	750 LUMENS/FT 10 W/FT 4000K 90 CRI	N/A	N/A
C1		RECTANGLE	CABLE	FORUM	ARC 3	SHOWROOM LOUNGE	SATIN ANODIZED / SILVER	N/A	12" RADIUS @ CORNERS	ARCD 33 95 40 WOL H REC V CC W/ ROUND CORNERS	950 LUMENS/FT 9 W/FT 4000K 90+ CRI	9'-0"	SILVER MOUNTING CANOPY FINISH
C2		RECTANGLE	CABLE	FORUM	ARC 3	FOCAL VEHICLE	SATIN ANODIZED / SILVER	N/A	12" RADIUS @ CORNERS	ARCD 33 95 40 WOL H REC V CC W/ ROUND CORNERS	950 LUMENS/FT 9 W/FT 4000K 90+ CRI	10'-0"	WHITE MOUNTING CANOPY FINISH
D2		TRIMLESS DOWNLIGHT	RECESS	AMERLUX	EVOKE 4.75"	VARIOUS GYP CEILINGS	CLEAR	TRIMLESS	5" DIA.	E4.75R NC A17 T 16 VOLTS 0-10V SD FL 409	1200 LUMENS 16 W 4000K 90+ CRI	N/A	25°
D3		TRIMLESS DOWNLIGHT	RECESS	AMERLUX	EVOKE 4.75"	VARIOUS GYP CEILINGS	CLEAR	TRIMLESS	5" DIA.	E4.75R NC A17 T 16 VOLTS 0-10V SD WF 409	2100 LUMENS 29 W 4000K 90+ CRI	N/A	40°
D4		DOWNLIGHT	RECESS	AMERLUX	EVOKE 2.9"	MERCHANDISING AREA	CLEAR	TRIMLESS	3" DIA.	E2.9RD HP T 11 120 X 1-10V T CLC NF 40	700 LUMENS 11 W 4000K 80+ CRI	N/A	20°
E		STRIP LIGHT	RECESS	TBD	TBD	LIGHT COVES THROUGHOUT	CLEAR	N/A	1.2" x 1.4" x LENGTH PER PLAN	TBD	TBD	N/A	3
F	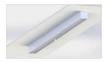	LINEAR	CABLE	FORUM	ALUMINA	SERVICE RECEPTION	WHITE	N/A	4" x 4" x LENGTH PER PLAN	SAD 44 95 40 WOL H 20' UNV WH	950 LUMENS/FT 8.9W/FT 4000K 80+ CRI	N/A	N/A
F1		HIGH BAY	SUSPENDED	LSI	ALLIANCE	SERVICE BAYS	WHITE	N/A	2' x 1'	LSI AL12 2LEDSE 18L LL W UNV 40 HCH10	18,060 LUMENS 118 W 4000K 80+ CRI	N/A	N/A
F1-ALT1		HIGH BAY	SUSPENDED	SIGNIFY	DAY-BRITE	SERVICE BAYS	WHITE	CLEAR	2' x 1'-2"	PHILIPS DAYBRITE FBX 16L L 40 UNV	16,000 LUMENS 124 W 4000K 80+ CRI	N/A	N/A
F1-ALT2		HIGH BAY	SUSPENDED	MERCURY ARCHITECTURAL LIGHTING	LHBT SERIES	SERVICE BAYS	WHITE	N/A	2' x 1'-8"	MERCURY LHBT 4 20000 40K R UNI	18,000 LUMENS 142 W 4000K 80+ CRI	N/A	N/A
F2		HIGH BAY	SUSPENDED	LSI	EG3	SERVICE BAYS	WHITE	N/A	4'	LSI EG3 4 LED 6L DA S UNV DIM 40 80 HCH10	4,400 LUMENS 32 W 4000K 80 CRI	N/A	N/A
F2-ALT1		HIGH BAY	SUSPENDED	SIGNIFY	DAYBRITE	SERVICE BAYS	WHITE	CLEAR	4'	PHILIPS DAYBRITE DWA E 65L 840 4 UNV	7,000 LUMENS 65 W 4000K 80 CRI	N/A	N/A
F3		HIGH BAY	SUSPENDED	LSI	EG3	SERVICE BAYS	WHITE	N/A	4'	LSI EG3 4 LED 6L DA S UNV DIM 40 80 HCH10	6,695 LUMENS 32 W 4000K 80 CRI	N/A	N/A
LT-2		HANGING PENDANT	SUSPENDED	A+R	BOLA SPHERE	OFFICES	MATTE BLACK	N/A	12"	BOLA SPHERE PENDANT	1,500 LUMENS 20 W 2700K 95 CRI	7'-0" AFF	N/A
M24		2 x 4	RECESS	DAYBRITE	ARIOSO	VARIOUS	WHITE	N/A	24" x 48"	2 AVE G 43L 840 4 ACR UNV DIM	4,300 LUMENS 40 W 4000K 80+ CRI	N/A	N/A
M22		2 x 2	RECESS	DAYBRITE	ARIOSO	VARIOUS	WHITE	N/A	24" x 24"	2 AVE G 38L 840 2 ACR UNV DIM	3,800 LUMENS 31 W 4000K 80+ CRI	N/A	N/A
S		WRAPAROUND STRIP	SURFACE	DAYBRITE	ARIOSO	VARIOUS	WHITE	N/A	4" x 48"	FSWEZ 4 40L 840 UNV	4,000 LUMENS 32 W 4000K 80+ CRI	N/A	N/A

GENERAL NOTES:

1. PROVIDE 0-10V DIMMING CAPABILITY AND APPROPRIATE CONTROLS FOR ALL LUMINAIRES
2. PROVIDE HIGH CRI (80+) LEDS
3. INCLUDE ALL SYSTEM INTEGRATION ACCESSORIES (POWER SUPPLIES, FEED CABLES, MOUNTING HARDWARE, ETC) AS NEEDED.
4. PROVIDE EXIT AND EGRESS LIGHTING TO COMPLY WITH NATIONAL AND LOCAL CODES
5. VOLTAGES ARE TO BE DETERMINED BY ELECTRICAL ENGINEER
6. ALL LIGHTING SHALL BE AS SPECIFIED OR APPROVED EQUAL. ARCHITECT OF RECORD TO CONTACT CHANGE UP FOR LIGHT FIXTURE SUBSTITUTION APPROVAL AS REQUIRED.

OPTIONAL LIGHTING CONSULTANTS:

COMPANY: KING LIGHTING, INC
NAME: MEGAN BLANEY
P: 513-519-1986
E: MEGAN.BLANEY@KING-LIGHTING.COM

COMPANY: COMMERCIAL LIGHTING
NAME: FARREN HALCOVICH
P: 760-831-9815
E: FARREN@COMMERCIAL-LIGHTING.NET

COMPANY:BR LIGHTING & CONTROLS
NAME: CLIFF BROOKS
P: 937-672-3064
E: CLIFF@BRLTG.COM

TDI ASSOCIATES, INC.
ARCHITECTURE & PLANNING

25217 SOUTH WIND LAKE ROAD
WIND LAKE, WISCONSIN 53185
PHONE 262-409-2530

PROFESSIONAL CONSULTANTS, INC.
300 COTTONWOOD AVE # 7
HARTLAND, WISCONSIN 53029
(262) 367-6080

RUSS DARROW
KIA OF WAUKESHA

2141 EAST MORELAND BLVD
WAUKESHA, WISCONSIN

TDI ASSOCIATES, INC
All Rights Reserved

OWNERSHIP OF DOCUMENTS

This document, and the ideas and design incorporated herein, as an instrument of professional service, is the sole property of TDI Associates, Inc., and is not to be used in whole or in part for any other project or purpose without the expressed written authorization of TDI Associates, Inc.

Sheet Title
LIGHT FIXTURE SCHEDULE

Issued For: Date:
REV #2 06-27-2025

Date: 07-25-2024
Job NO.: 24103.000
Drawn By: LCC
Sheet No.
A6.2
2

DOOR SCHEDULE

DOOR									FRAME		H.W.	REMARKS
MARK	ROOM	WIDTH	HEIGHT	MATERIAL	FINISH	TYPE	GLASS	LABEL	TYPE	MATERIAL		
120A	CASHIER	3'-0"	7'-0"	SOLID CORE WOOD	PAINT	B	NONE		F-2	HOLLOW METAL	6	
112	PARTS MANAGER	3'-0"	7'-0"	GLASS	CLEAR	D	VISION		-	ALUMINUM	2	
113A	SERVICE WRITE-UP	3'-0"	7'-0"	ALUM / GLASS	CLEAR	A	VISION		BL-1	ALUMINUM	4	
113B	SERVICE WRITE-UP	3'-0"	7'-0"	HOLLOW MTL	PAINT	B	NONE		F-1	HOLLOW METAL	1	FRAME & DOOR PAINTED TO MATCH ADJACENT WALL
114A	SERVICE RECEPTION	3'-0"	7'-0"	ALUM / GLASS	CLEAR	A	VISION		F-1	ALUMINUM	4	
114B	SERVICE RECEPTION	10'-0"	10'-0"	ALUM / GLASS	PRE. FIN.	C	VISION		-	-	3	
114C	SERVICE RECEPTION	10'-0"	10'-0"	ALUM / GLASS	PRE. FIN.	C	VISION		-	-	3	
120	F&I	3'-0"	7'-0"	GLASS	CLEAR	D	VISION		-	ALUMINUM	2	
121	F&I	3'-0"	7'-0"	GLASS	CLEAR	D	VISION		-	ALUMINUM	2	
127A	CAR WASH	10'-0"	10'-0"	STEEL INSULATED	PRE. FIN.	E	NONE		-	ALUMINUM	3	
127B	CAR WASH	3'-0"	7'-0"	HOLLOW MTL	PAINT	B	NONE		F-1	HOLLOW METAL	5	FRAME & DOOR PAINTED TO MATCH ADJACENT WALL
127C	CAR WASH	10'-0"	10'-0"	STEEL INSULATED	PRE. FIN.	E	NONE		-	ALUMINUM	3	
127D	CAR WASH	3'-0"	7'-0"	HOLLOW MTL	PAINT	B	NONE		F-1	HOLLOW METAL	5	FRAME & DOOR PAINTED TO MATCH ADJACENT WALL

3

DOOR NOTES

1. ALL DOOR HARDWARE SETS SHALL HAVE LEVER HANDLES UNLESS OTHERWISE NOTED.
2. ALL EXISTING AND NEW WOOD DOORS SHALL BE PL-1 W/ BLACK FRAMES & HARDWARE.

HARDWARE SET #1
1-1/2 PR. HINGES
1 STOP
1 CLOSURE
1 LEVER PASSAGE

HARDWARE SET #2
1 SET PIVOTS
1 STOP
1 SET PUSH/PULL HDWR
1 SET LOCK W/CYLINDER

HARDWARE SET #3
HARDWARE BY DOOR MANUFACTURER

HARDWARE SET #4
1 SETS PIVOTS
1 STOPS
1 CLOSERS
1 ALUMINUM THRESHOLD
1 SET WEATHER-STRIPPING
1 SET PUSH/PULL HDWR
1 SET LOCK W/CYLINDER

HARDWARE SET #5
1-1/2 PR. HINGES
1 STOP
1 CLOSER
1 ALUM. THRESHOLD
1 SET WEATHERSTRIPPING
1 LEVER ENTRANCE LOCK

HARDWARE SET #6
1-1/2 PR. HINGES
1 STOP
1 LEVER OFFICE LOCK

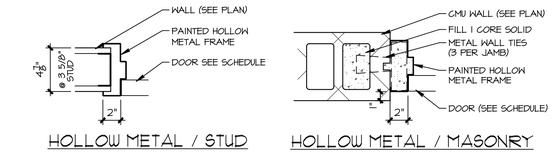

1 FRAME DETAILS
SCALE: 1 1/2" = 1'-0"

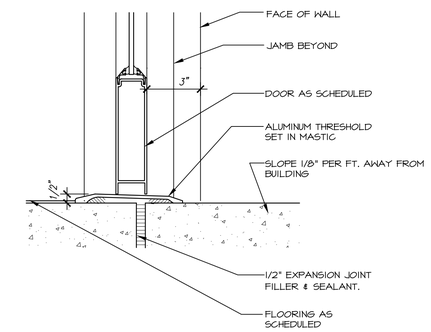

2 THRESHOLD DETAIL
SCALE: 3" = 1'-0"

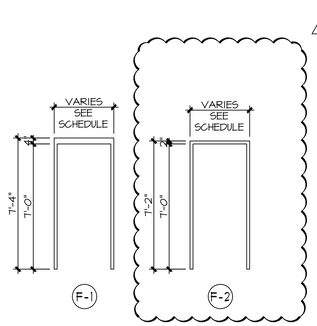

3 DOOR FRAMES
SCALE: 1/4" = 1'-0"

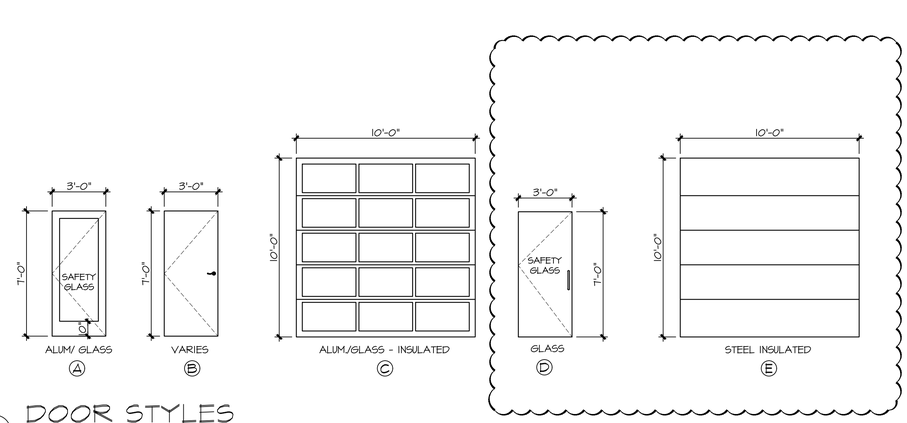

4 DOOR STYLES
SCALE: 1/4" = 1'-0"

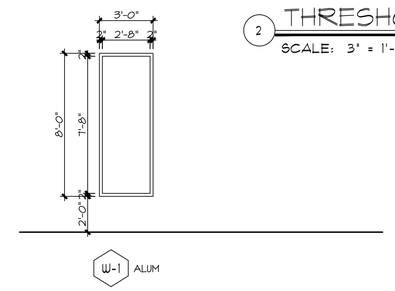

5 WINDOW FRAMES
SCALE: 1/4" = 1'-0"

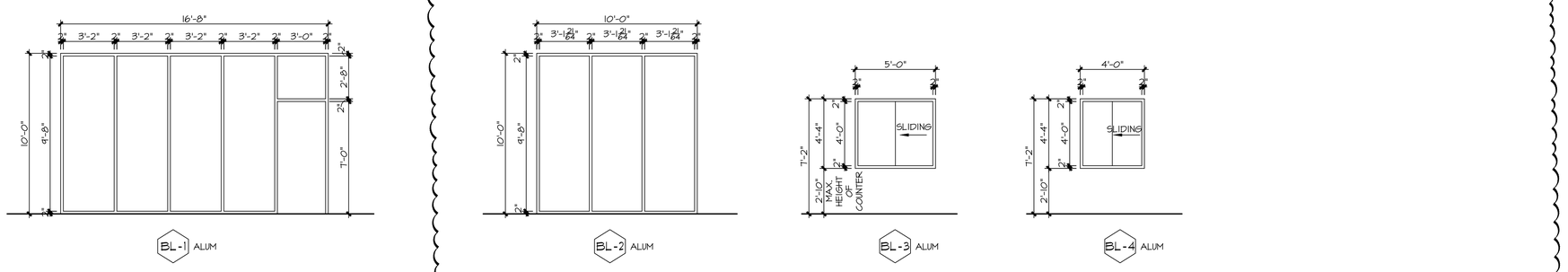

3

6 BORROWED LITES
SCALE: 1/4" = 1'-0"

TDI ASSOCIATES, INC.
ARCHITECTURE & PLANNING

25217 SOUTH WIND LAKE ROAD
WIND LAKE, WISCONSIN 53185
PHONE 262-409-2530

PROFESSIONAL CONSULTANTS, INC.
300 COTTONWOOD AVE # 7
HARTLAND, WISCONSIN 53029
(262) 367-6080

RUSS DARROW KIA OF WAUKESHA
2141 EAST MORELAND BLVD
WAUKESHA, WISCONSIN

TDI ASSOCIATES, INC
All Rights Reserved

OWNERSHIP OF DOCUMENTS

This document, and the ideas and design incorporated herein, as an instrument of professional service, is the sole property of TDI Associates, Inc., and is not to be used in whole or in part for any other project or purpose without the expressed written authorization of TDI Associates, Inc.

Sheet Title
DOOR SCHEDULE & DETAILS

Issued For:	Date:
REV #2	06-27-2025
REV #3	08-06-2025

Date: 07-25-2024
Job NO.: 24103.000
Drawn By: LCC
Sheet No.
A7.1

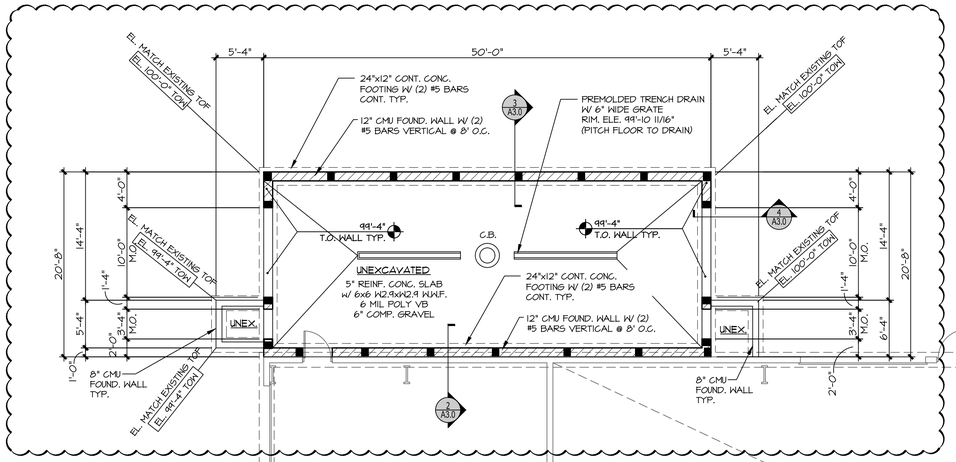

2

REINFORCEMENT DEVELOPMENT & LAP SPLICE SCHEDULE

SCHEDULE NOTES:

1. ALL VALUES BELOW ARE IN INCHES.
2. ALL SPLICES IN REINFORCEMENT SHALL BE CLASS "B" LAPS UNLESS OTHERWISE NOTED.
3. STEEL REINFORCING BARS SHALL CONFORM TO ASTM A615 (GRADE 60).
3. VALUES IN THIS SCHEDULE ARE BASED ON NORMAL WEIGHT CONCRETE (145 PCF). f'c=3000 PSI
4. TENSION DEVELOPMENT LENGTHS AND TENSION LAP SPLICE LENGTHS ARE CLACULATED PER CURRENT ADDITION OF ACI-318.
5. TOP BARS ARE DEFINED AS HORIZONTAL BARS HAVING 12" OR MORE OF CONCRETE CAST BELOW THE BARS.

BAR SIZE		#3	#4	#5	#6	#7	#8	#9	#10	#11	REMARKS
CLASS A SPLICE LENGTH	TOP BARS	22	29	36	43	63	72	81	91	101	
	OTHER BARS	17	22	28	33	48	55	62	70	78	
CLASS B SPLICE LENGTH	TOP BARS	28	37	47	56	81	93	105	118	131	
	OTHER BARS	22	29	36	43	63	72	81	91	101	

DIMENSION NOTES

DIMENSIONS @ EXTERIOR WALLS ARE TO FACE OF SHEATHING / FOUNDATION

LEGEND:

T.O.W. = TOP OF WALL
T.O.P. = TOP OF PIER
T.O.L. = TOP OF LEDGE
T.O.F. = TOP OF FOOTING

FLUSH PILASTERS

- (2) #5 BARS IN ONE CORE GROUTED SOLID IN 3,000 PSI CONCRETE W/ #5 DOWEL @ FOOTING 8'-0" O.C. MAX SPACING (UNLESS NOTED)

CONTROL JOINT NOTE:

4" SLAB = 8'-0" MAX. SPACING
5" SLAB = 10'-0" MAX. SPACING

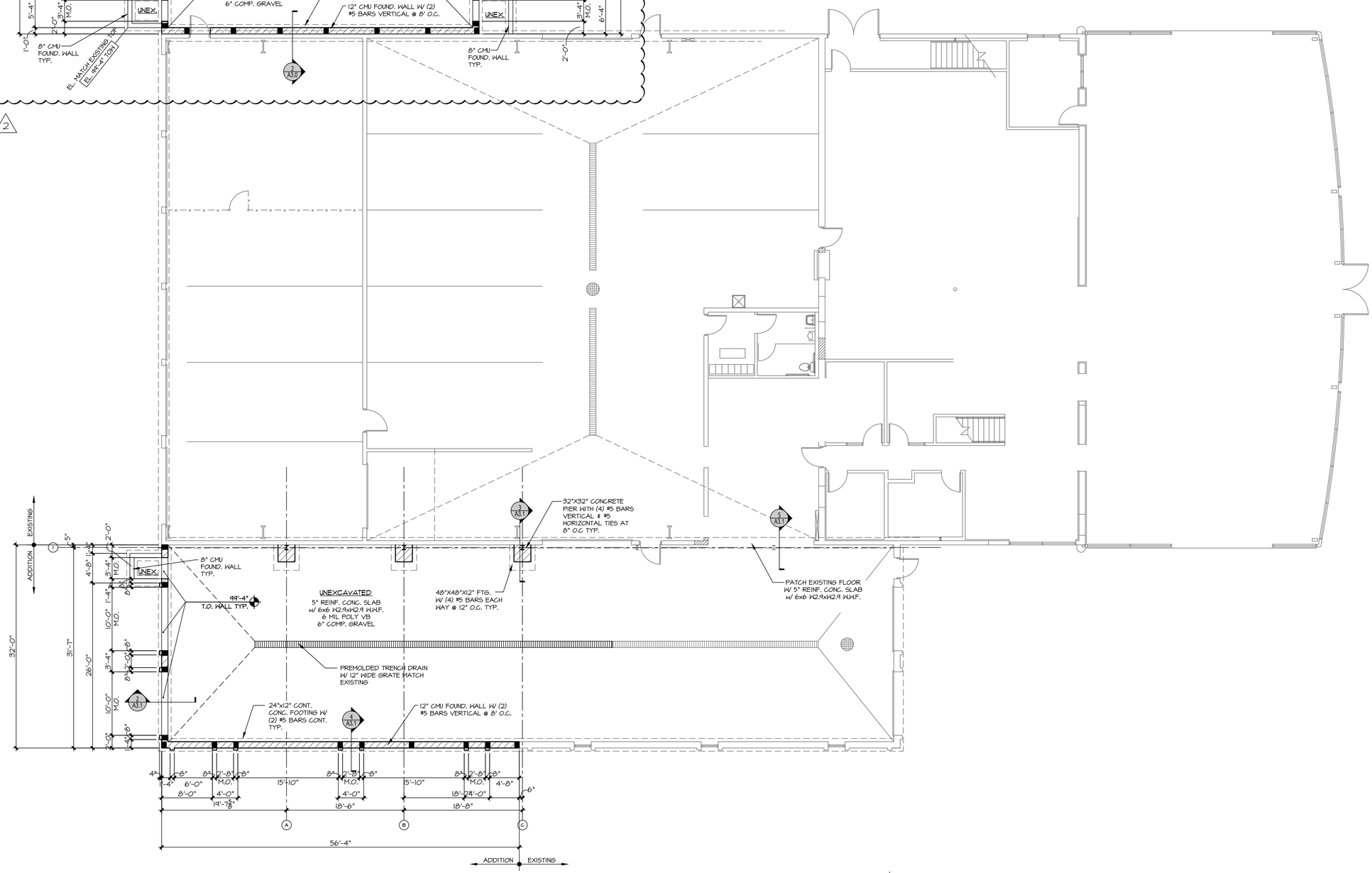

1 FOUNDATION PLAN
1/8"=1'-0"

TDI ASSOCIATES, INC.
ARCHITECTURE & PLANNING

25217 SOUTH WIND LAKE ROAD
WIND LAKE, WISCONSIN 53185
PHONE 262-409-2530

PROFESSIONAL CONSULTANTS, INC.
300 COTTONWOOD AVE # 7
HARTLAND, WISCONSIN 53029
(262) 367-6080

RUSS DARROW
KIA OF WAUKESHA

2141 EAST MORELAND BLVD
WAUKESHA, WISCONSIN

TDI ASSOCIATES, INC
All Rights Reserved

OWNERSHIP OF DOCUMENTS

This document, and the ideas and design incorporated herein, as an instrument of professional service, is the sole property of TDI Associates, Inc., and is not to be used in whole or in part for any other project or purpose without the expressed written authorization of TDI Associates, Inc.

Sheet Title
FOUNDATION PLAN

Issued For:	Date:
REV #2	06-27-2025

Date:	07-25-2024
Job NO.:	24103.000
Drawn By:	LCC
Sheet No.	S1.1

COLUMN / PLATE SCHEDULE											
COLUMN			PLATE (PL) SIZE				ANCHOR BOLTS				
MARK	STEEL COLUMN SIZE	WEIGHT	WIDTH	LENGTH	THICKNESS	STEEL GRADE	QUANTITY	SIZE	LENGTH	STEEL GRADE	REMARKS
C-1	W8X28	28.00 #/LF	14"	14"	1/2"	A-36	4	3/4"	12"	A-490	-

BEAM SCHEDULE								
MARK	DESCRIPTION	# OF PLIES	SIZE PER PLY	BEARING	MATERIAL	MASONRY PLATE	MINIMUM BEARING	MATERIAL GRADE
BEAM 'A'	COLUMN LINE '1'	1	W16x26	STL. COL.	STEEL	-	-	50 KSI STEEL
LINTEL 'B'	LINTEL BEAM	1	W8x40	MASONRY	STEEL	11-1/4" X 5/16"	8"	50 KSI STEEL
LINTEL 'C'	LINTEL BEAM	1	W8x21	MASONRY	STEEL	11-1/4" X 5/16"	8"	50 KSI STEEL
LINTEL 'D'	LINTEL BEAM	1	W8x21	MASONRY	STEEL	11-1/4" X 5/16"	8"	50 KSI STEEL
LINTEL 'E'	LINTEL BEAM	1	W8x28	MASONRY	STEEL	11-1/4" X 5/16"	8"	50 KSI STEEL

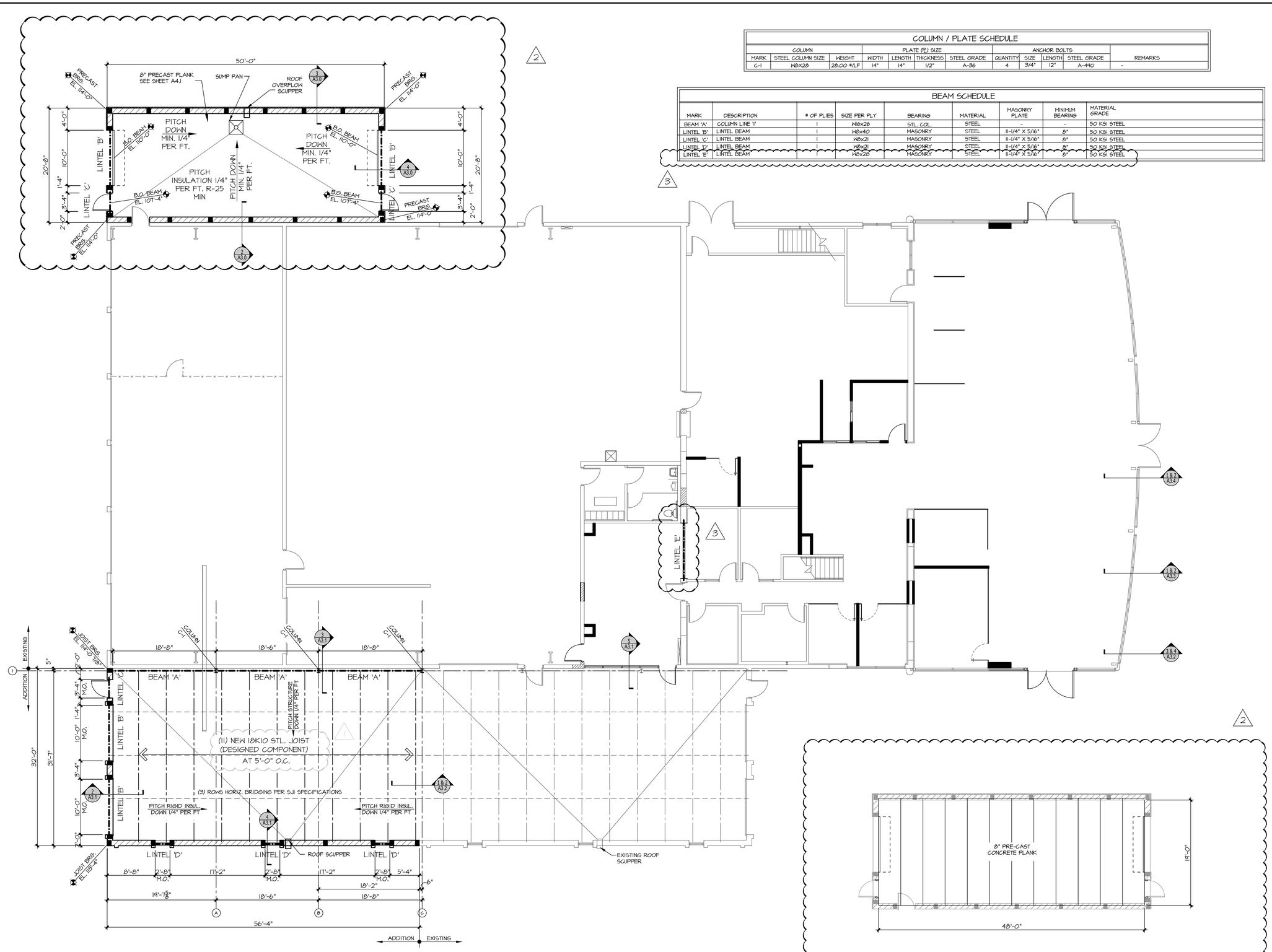

1 ROOF FRAMING PLAN
1/8"=1'-0"

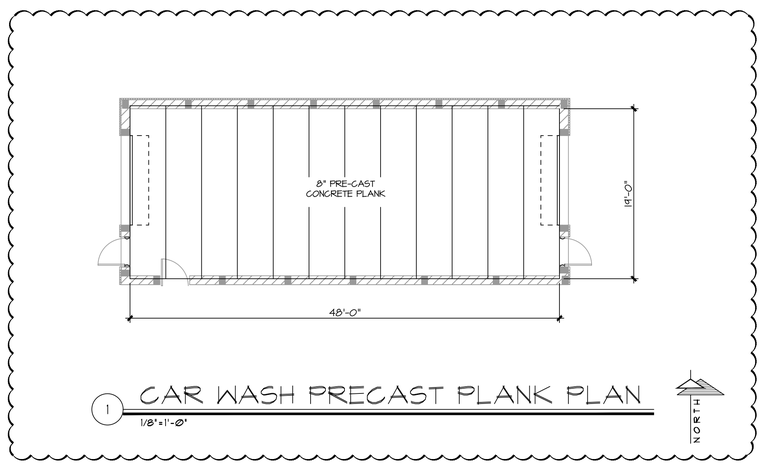

1 CAR WASH PRECAST PLANK PLAN
1/8"=1'-0"

TDI ASSOCIATES, INC.
ARCHITECTURE & PLANNING

25217 SOUTH WIND LAKE ROAD
WIND LAKE, WISCONSIN 53185
PHONE 262-409-2530

PROFESSIONAL CONSULTANTS, INC.
300 COTTONWOOD AVE # 7
HARTLAND, WISCONSIN 53029
(262) 367-6080

RUSS DARROW KIA OF WAUKESHA

2141 EAST MORELAND BLVD
WAUKESHA, WISCONSIN

TDI ASSOCIATES, INC
All Rights Reserved

OWNERSHIP OF DOCUMENTS

This document, and the ideas and design incorporated herein, as an instrument of professional service, is the sole property of TDI Associates, Inc., and is not to be used in whole or in part for any other project or purpose without the expressed written authorization of TDI Associates, Inc.

Sheet Title
ROOF FRAMING & PRECAST PLANK PLAN

Issued For:	Date:
REV #1	09-03-2024
REV #2	06-27-2025
REV #3	08-06-2025

Date:	07-25-2024
Job NO.:	24103.000
Drawn By:	LCC

Sheet No.
S2.1